Hydrastore

Hydraulic Systems & Components

pumps
industrial valves
sub plates
mobile valves
line mounted valves
circuit savers
switches & sensors
motors
coolers
filtration
hoses
powerpacks
intensifiers
cylinders
actuators
radio control
electronic control
electrification

Hydrastore
Hydraulic Systems & Components

Welcome to Hydrastore's hydraulic component, product overview and standard power unit catalogue. As with previous editions we have listened to users and implemented changes in line with their recommendations. We have expanded on the number of components that can be ordered by part number and included an overview of our partners premium brand product lines.

The overview has been introduced to quickly locate a specific item within the Hydrastore range. For hydraulic components you can do this by flow rate, pressure or displacement and other specific item rated variables and for electronic and radio products, inputs / outputs and user interface detail has been provided. We see this area being particular useful for technicians, engineers and system developers.

SUBJECT TO DEMAND PART NUMBERED ITEMS WITHIN THIS CATALOGUE WILL BE AVAILABLE FOR NEXT DAY DELIVERY.

This brochure represents a small selection of the products stocked at Hydrastore so if you are looking for something specific just ask.

Hydrastore is an ISO 9001:2015 quality assured company and one of the UK's leading suppliers of hydraulic components and complete systems. We pride ourselves on our customer service, technical knowledge and our ability to react quickly to the demands of today's market and we look forward to supporting you with your hydraulics requirements.

Call our experienced and trained sales team for assistance and orders

Systems & Components Division
Sandtoft Ind. Estate
Belton, Nr. Doncaster
South Yorkshire
DN9 1PN
T: 01427 874445
E: sales@hydrastore.co.uk

Fluid Transfer Division
Unit 11, Haywards Industrial Estate,
Orton Way,Castle Bromwich,
Birmingham,
B35 1BT
T: 0121 326 6395
E: hoses@hydrastore.co.uk

Whilst we use all reasonable efforts to ensure that the information published in this catalogue is accurate, current, and complete at the date of publication, no representations or warranties are made (express or implied) as to the accuracy, currency or completeness of such information. We cannot accept any responsibility (to the extent permitted by law) for any loss arising directly or indirectly from the use of, or any action taken in reliance on, any information appearing in this catalogue.

www.hydrastore.co.uk

Contents

Stock Items

Pumps & handpumps	5
Industrial valves & electronic drivers	21
Subplates & strip manifolds	43
Mobile directional valves	53
Line mounted valves	57
Circuit savers	95
Switches & sensors	111
Coolers	120
Tanks & lids	122
Bell housing and couplings	123
Tank furnishing accessories	124
Pressure test equipment	126
Electric motors	127
Filtration	129
Hoses, hose inserts and adapters	141
Hydraulic motors	175
Hydraulic Powerpacks	179
Radio control	189

Product Overview

Pumps overview	202
Directional valves & modules overview	213
Mobile valves overview	243
Switches & sensors overview	249
Intensifiers overview	253
Motors overview	257
Hoses overview	267
Cylinders overview	273
Actuators overview	277
Radio control overview	281
Electronic control overview	297
Electrification overview	313

Hydrastore

Hydraulic Systems & Components

British Assessment Bureau
UKAS MANAGEMENT SYSTEMS 8289
ISO 9001
QUALITY MANAGEMENT

Component Supply

Hydraulic Powerpacks

Hoses & Fittings

System Design

Electronic & Radio Control

Electrification

Stock
Extensive stock
Available for next day delivery

Specialists
Highly qualified knowledgable team
provide technical support

Quality
Operates a management system
accredited with ISO 9001:2015

Support
National technical support network.
Meeting industrial standards and type approval.

Brands
Premium brand partnerships
Tier 1 supply

Range
From complex hydraulic, electrification,
electrical and radio control systems to single
component supply.

G3/8"
2
50 bar
22
23
1
3
G3/8"
G3/8"
G1/2"
G3/8"
G3/8"
17
G3/8"
G3/8"
G1/2"
G1/4"
1
100
1
ø12x1.5
1.45 l/min
1
G1/4"
G1/4"
0.25KW
415V / 3PH / 50Hz
1350rpm
4
5
6
7
8
M
14
ø12x1.5
4" BSP

Gear pumps

GROUP 1 - Z1 SERIES - GEAR PUMP 6
GROUP 2 - Z2 SERIES - GEAR PUMP 7
GROUP 3 - Z3 SERIES - GEAR PUMP 8
GROUP 3 - W3 SERIES - GEAR PUMP 9

Piston pumps

PVPC PISTON PUMP 10
PVPC-*-3029 11
PVPC-*-4046 11
PVPC-*-5073 11
K3VL OPEN CIRCUIT AXIAL PISTON PUMP 12
K3VL28 14
K3VL45 14
K3VL80 14
K3VL 112+140 15
K3VL 200 15

Vane pumps

PFE ATOS VANE PUMP 16

Hand pumps

PMP 20-S 18
PMO 50-S 18
PM 12 25 45-S 19
PM 12 25 45 BYB-S 19
PMDVB 12 25 45 20

HAND PUMP TANK (STEEL) WITH SUCTION PIPE & BREATHER 20
HAND PUMP HANDLE 20

GROUP 1 - Z1 SERIES - GEAR PUMP

Aluminum fixed displacement gear pumps with standard 4 bolt European flange, 1:8 taper shaft and BSP tapped ports.

Ordering Chart - Clockwise

Part No.	Description	Displace-ment (cc/ rev.)	Max. pressure (bar)
01ZA011C401TD	GRP 1 GEAR PUMP 1.08CC/REV - C/W ROT	1.08	240
01ZA016C401TD	GRP 1 GEAR PUMP 1.59CC/REV - C/W ROT	1.59	240
01ZA021C401TD	GRP 1 GEAR PUMP 2.09CC/REV - C/W ROT	2.09	240
01ZA026C401TD	GRP 1 GEAR PUMP 2.59CC/REV - C/W ROT	2.59	230
01ZA032C401TD	GRP 1 GEAR PUMP 3.15CC/REV - C/W ROT	3.15	210
01ZA037C401TD	GRP 1 GEAR PUMP 3.68CC/REV - C/W ROT	3.68	210
01ZA042C401TD	GRP 1 GEAR PUMP 4.19CC/REV - C/W ROT	4.19	190
01ZA048C401TD	GRP 1 GEAR PUMP 4.79CC/REV - C/W ROT	4.79	180
01ZA055C401TD	GRP 1 GEAR PUMP 5.49CC/REV - C/W ROT	5.49	170
01ZA062C401TD	GRP 1 GEAR PUMP 6.2CC/REV - C/W ROT	6.2	150
01ZA078C401TD	GRP 1 GEAR PUMP 7.81CC/REV - C/W ROT	7.81	130
01ZA088C401TD	GRP 1 GEAR PUMP 8.82CC/REV - C/W ROT	8.82	120

Pump gasket part no.	PG-01PM

GROUP 1

Type		11	16	21	26	32	37	42	48	55	62	78	88
Capacity	cm3/ rev	1.08	1.59	2.09	2.59	3.15	3.68	4.19	4.79	5.49	6.2	7.81	8.82
P1 Max working pressure	bar	240	240	240	230	210	210	190	180	170	150	130	120
P2 Intermittent pressure	bar	260	250	250	250	240	230	210	200	180	160	140	130
P3 Max peak pressure	bar	280	280	280	280	270	260	240	230	210	190	170	160
Max speed for P1 pressure	rpm	6000	6000	6000	5500	4500	4000	3800	3500	3500	3000	3000	3000
Max speed without load	rpm	8000	8000	8000	8000	8000	7000	6000	5500	5000	4500	4000	4000
Min speed for P1 pressure	rpm	1100	950	800	700	600	500	450	400	400	400	400	400

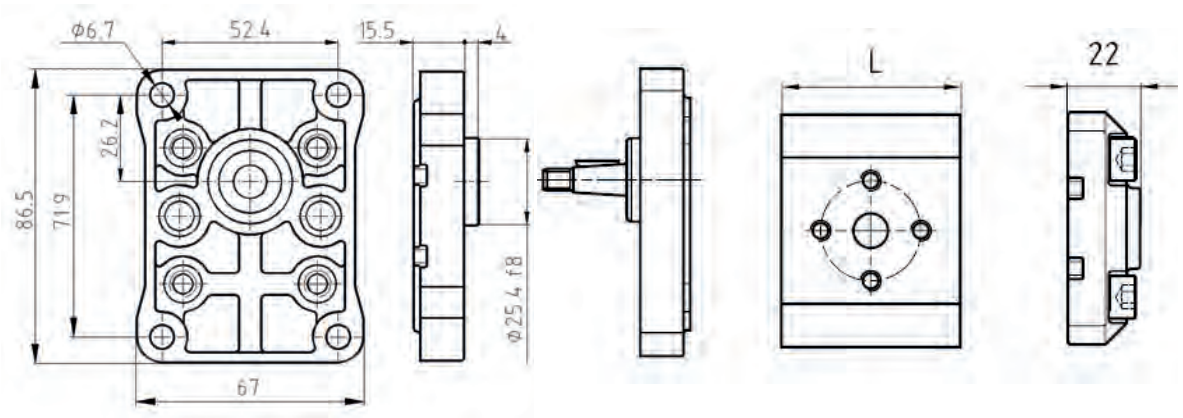

Type	L
11	38.3
16	40.3
21	42.3
26	44.3
32	46.5
37	48.6
42	50.6
48	53
55	55.8
62	58.6
78	65
88	69

The option for alternative mounting flanges and shafts are available, please contact the sales office for details.

GROUP 2 - Z2 SERIES - GEAR PUMP

Aluminum fixed displacement gear pumps with cast iron end covers, standard 4 bolts European flange, 1:8 taper shaft and BSP tapped ports.

Ordering Chart - Clockwise

Part No.	Description	Displacement (cc/rev.)	Max. pressure (bar)
02ZAG04C034DN	GRP 2 GEAR PUMP 4.4CC/REV. CW	4.40	300
02ZAG06C034DN	GRP 2 GEAR PUMP 6.28CC/REV. CW	6.28	300
02ZAG08C034DN	GRP 2 GEAR PUMP 8.16CC/REV. CW	8.16	300
02ZAG11C034DN	GRP 2 GEAR PUMP 11.3 CC/REV. CW	11.30	300
02ZAG14C035DN	GRP 2 GEAR PUMP 14.45 CC/REV. CW	14.45	300
02ZAG17C035DN	GRP 2 GEAR PUMP 16.95 CC/REV. CW	16.95	270
02ZAG20C035DN	GRP 2 GEAR PUMP 20.1 CC/REV. CW	20.10	230
02ZAG25C035DN	GRP 2 GEAR PUMP 25.75 CC/REV. CW	25.75	180
02ZAG31C035DN	GRP 2 GEAR PUMP 31.4 CC/REV. CW	31.40	160

Ordering Chart - Anti Clockwise

Part No.	Description	Displacement (cc/rev.)	Max. pressure (bar)
02ZAG04C034SN	GRP 2 GEAR PUMP 4.4CC/REV. CCW	4.4	300
02ZAG06C034SN	GRP 2 GEAR PUMP 6.28CC/REV. CCW	6.28	300
02ZAG08C034SN	GRP 2 GEAR PUMP 8.16CC/REV. CCW	8.16	300
02ZAG11C034SN	GRP 2 GEAR PUMP 11.3 CC/REV. CCW	11.3	300
02ZAG14C035SN	GRP 2 GEAR PUMP 14.45 CC/REV. CCW	14.45	300
02ZAG17C035SN	GRP 2 GEAR PUMP 16.95 CC/REV. CCW	16.95	270
02ZAG20C035SN	GRP 2 GEAR PUMP 20.1 CC/REV. CCW	20.1	230
02ZAG25C035SN	GRP 2 GEAR PUMP 25.75 CC/REV. CCW	25.75	180
02ZAG31C035SN	GRP 2 GEAR PUMP 31.4 CC/REV. CCW	31.4	160

Pump gasket part no.	PG-02M

GROUP 2

Type		4	6	8	11	14	17	20	25	31
Capacity	cm3/ rev	4.4	6.28	8.16	11.3	14.45	16.95	20.1	25.75	31.4
P1 Max working pressure	bar	300	300	300	300	300	270	230	180	160
P2 Intermittent pressure	bar	340	310	310	310	300	270	240	200	170
P3 Max peak pressure	bar	360	360	360	360	360	330	290	230	300
Max speed for P1 pressure	rpm	4500	4500	3700	3300	2700	2500	2500	2500	2200
Max speed without load	rpm	5500	5500	4700	4000	3300	3000	3000	3000	2700
Min speed for P1 pressure	rpm	1000	700	550	450	400	350	300	250	200

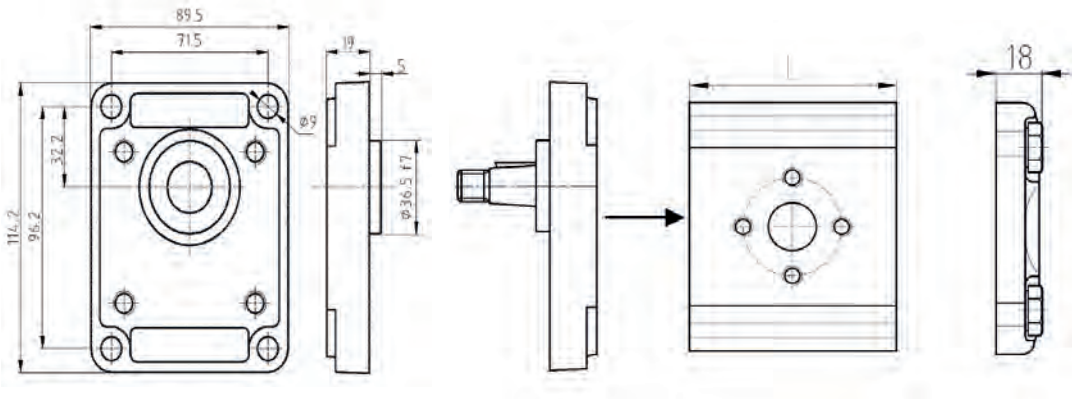

Type	L
4	51
6	54
8	57
11	70
14	75
17	79
20	84
25	93
31	102

The option for alternative mounting flanges and shafts are available, please contact the sales office for details.

GROUP 3 - Z3 SERIES - GEAR PUMP

Aluminum fixed displacement gear pumps with cast iron end covers, standard 4 bolts European flange, 1:8 taper shaft and BSP tapped ports.

Ordering Chart

Part No.	Description	Displacement (cc/rev.)	Max. pressure (bar)
03ZAG25C064DN	GRP 3 GEAR PUMP 24.9CC/REV CW	24.9	280
03ZAG35C064DN	GRP 3 GEAR PUMP 34.3CC/REV CW	34.3	280
03ZAG45C064DN	GRP 3 GEAR PUMP 45.2CC/REV CW	45.2	250
03ZAG55C065DN	GRP 3 GEAR PUMP 54.4CC/REV CW	54.5	230
03ZAG64C065DN	GRP 3 GEAR PUMP 63.9CC/REV CW	63.9	200
03ZAG70C065DN	GRP 3 GEAR PUMP 70.0CC/REV CW	70	170
03ZAG80C067DN	GRP 3 GEAR PUMP 78.7CC/REV CW	78.7	170

Ordering Chart - Anti Clockwise

Part No.	Description	Displacement (cc/rev.)	Max. pressure (bar)
03ZAG25C064SN	GRP 3 GEAR PUMP 24.9CC/REV CCW	24.9	280
03ZAG35C064SN	GRP 3 GEAR PUMP 34.3CC/REV CCW	34.3	280
03ZAG45C064SN	GRP 3 GEAR PUMP 45.2CC/REV CCW	45.2	250
03ZAG55C065SN	GRP 3 GEAR PUMP 54.4CC/REV CCW	54.5	230
03ZAG64C065SN	GRP 3 GEAR PUMP 63.9CC/REV CCW	63.9	200
03ZAG70C065SN	GRP 3 GEAR PUMP 70.0CC/REV CCW	70	170
03ZAG80C067SN	GRP 3 GEAR PUMP 78.7CC/REV CCW	78.7	170

Pump gasket part no.	PG-03M

GROUP 3

Type		25	35	45	55	64	70	80
P1 Max.pressure	bar	280	280	250	230	200	170	170
P2 Max peak pressure	bar	310	310	280	250	220	190	190
Min speed for P1 pressure	rpm	450	350	350	350	350	350	350
Max speed without load	rpm	3000	3000	2200	2200	2000	1800	1800
Weight	kg	10.9	11.2	11.5	11.9	12.2	12.4	12.7

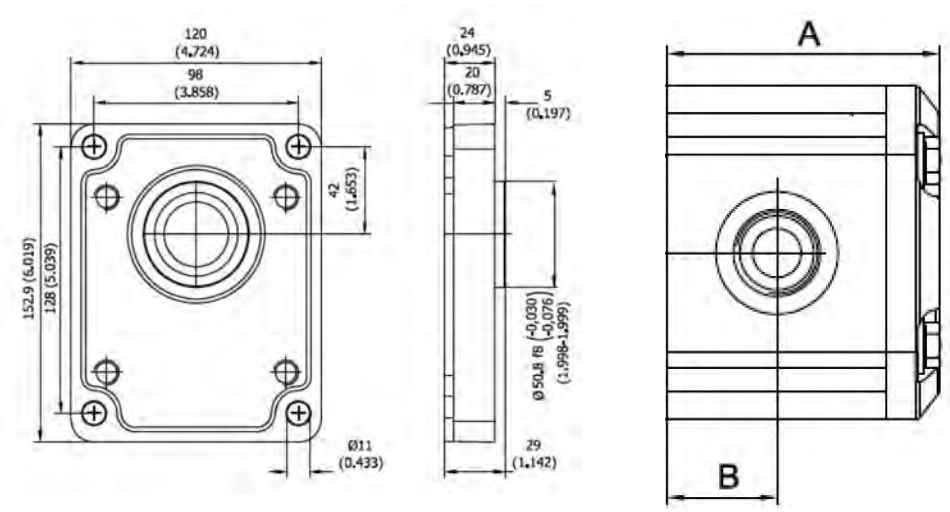

Type	A (mm)
25	104
35	110
45	117
55	123
64	129
70	132.9
80	138.6

The option for alternative mounting flanges and shafts are available, please contact the sales office for details.

GROUP 3 - W3 SERIES - GEAR PUMP

Cast iron fixed displacement gear pumps, standard 4 bolts European flange, 1:8 taper shaft and BSP tapped ports.

Ordering Chart - Clockwise

Part No.	Description	Displacement (cc/rev.)	Max. pressure (bar)
030W0A25C064XDN	GRP 3 CAST IRON GEAR PUMP 24.9CC/REV. CW	24.9	300
030W0A35C064XDN	GRP 3 CAST IRON GEAR PUMP 34.3CC/REV. CW	34.3	280
030W0A45C064XDN	GRP 3 CAST IRON GEAR PUMP 45.2CC/REV. CW	45.2	250
030W0A55C065XDN	GRP 3 CAST IRON GEAR PUMP 54.5CC/REV. CW	54.5	230
030W0A64C064XDN	GRP 3 CAST IRON GEAR PUMP 63.9CC/REV. CW	63.9	200
030W0A80C064XDN	GRP 3 CAST IRON GEAR PUMP 78.7CC/REV. CW	78.7	170

Ordering Chart - Anti Clockwise

Part No.	Description	Displacement (cc/rev.)	Max. pressure (bar)
030W0A25C064XSN	GRP 3 CAST IRON GEAR PUMP 24.9CC/REV. CCW	24.9	300
030W0A35C064XSN	GRP 3 CAST IRON GEAR PUMP 34.3CC/REV. CCW	34.3	280
030W0A45C064XSN	GRP 3 CAST IRON GEAR PUMP 45.2CC/REV. CCW	45.2	250
030W0A55C065XSN	GRP 3 CAST IRON GEAR PUMP 54.5CC/REV. CCW	54.5	230
030W0A64C064XSN	GRP 3 CAST IRON GEAR PUMP 63.9CC/REV. CCW	63.9	200
030W0A80C064XSN	GRP 3 CAST IRON GEAR PUMP 78.7CC/REV. CCW	78.7	170

Pump gasket part no.	PG-03M

Type		25	35	45	55	64	80
Capacity	Cm3/ rev	24.9	34.3	45.2	54.5	63.9	78.7
P1 Max working pressure	Bar	300	280	250	230	200	170
P2 Intermittent pressure	Bar	320	300	270	250	220	190
P3 Max peak pressure	Bar	350	330	300	270	240	210
Max speed for P1 pressure	Rpm	3000	2500	2200	2000	2000	1800
Max speed without load	Rpm	3500	3000	2800	2500	2500	2200
Min speed for P1 pressure	Rpm	450	350	350	300	250	200

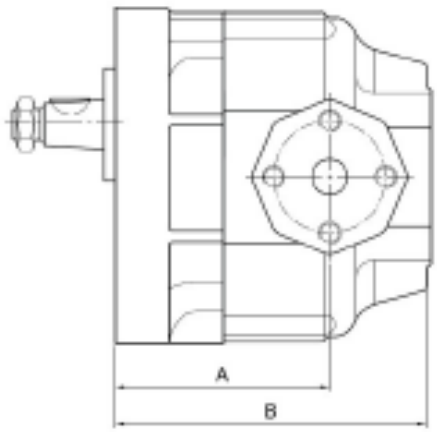

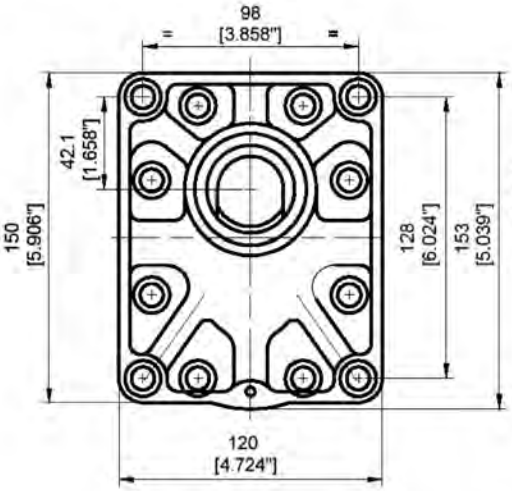

Type	A (mm)	B(mm)
25	76	127
35	82	127
45	85	132
55	85	132
64	89	132
80	95	132

The option for alternative mounting flanges and shafts are available, please contact the sales office for details.

Hydrastore
Hydraulic Systems & Components

PVPC ATOS OPEN CIRCUIT AXIAL PISTON PUMP

Variable displacement axial piston pumps with swash plate design suited for high pressure open circuits.
Available with Pressure compensator (C) load sense (L) or remote control (R) options.

Ordering Chart

Part No.	Description	Displacement (cc/rev.)	Max. pressure (bar)
PVPC-C-3029/1D	AXIAL PISTON PUMP 29CC/REV C/W ROTATION	29	280
PVPC-C-4046/1D	AXIAL PISTON PUMP 46CC/REV C/W ROTATION	46	280
PVPC-C-5073/1D	AXIAL PISTON PUMP 73CC/REV C/W ROTATION	73	280
PVPC-L-3029/1D	AXIAL PISTON PUMP 29CC/REV C/W ROTATION	29	280
PVPC-L-4046/1D	AXIAL PISTON PUMP 46CC/REV C/W ROTATION	46	280
PVPC-L-5073/1D	AXIAL PISTON PUMP 73CC/REV C/W ROTATION	73	280
PVPC-R-3029/1D	AXIAL PISTON PUMP 29CC/REV C/W ROTATION	29	280
PVPC-R-4046/1D	AXIAL PISTON PUMP 46CC/REV C/W ROTATION	46	280
PVPC-R-5073/1D	AXIAL PISTON PUMP 73CC/REV C/W ROTATION	73	280

Hydraulic Characteristics

PVPC size	3029	4046	5073
Displacement (cc/rev)	29	46	73
Theoretical max flow at 1450 rpm (l/min)	42	66,7	105,8
Max pressure (bar)	280/350	280/350	280/350
Min/Max inlet pressure (bar)	0,8 / 25	0,8/25	0,8/25
Max pressure on drain port	1,5	1,5	1,5
Power consumption at 1450 rpm and at a max displacement (Kw)	19,9	31,6	50,1
Max Torque on the shaft (Nm)	Type 1 210	Type 1 350	Type 1 670
Max torque at max working pressure (Nm)	128	203	328
Speed rating (rpm)	500 / 3000	500 / 2600	500 / 2600
Body volume	0,7	0,9	1,5

PVPC-*-3029

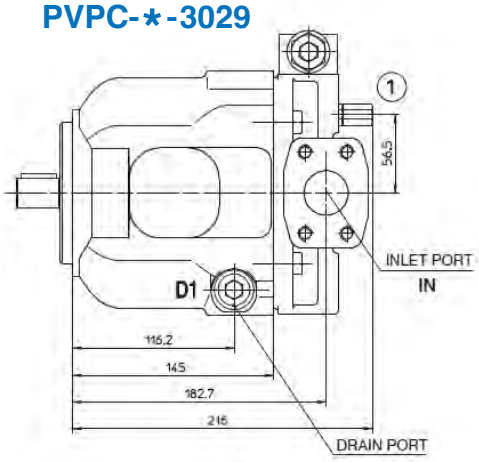

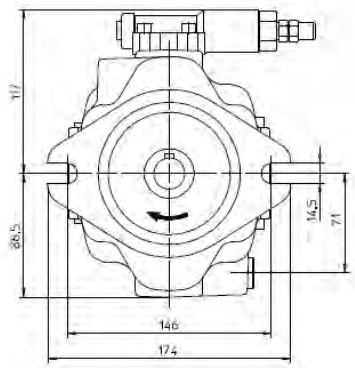

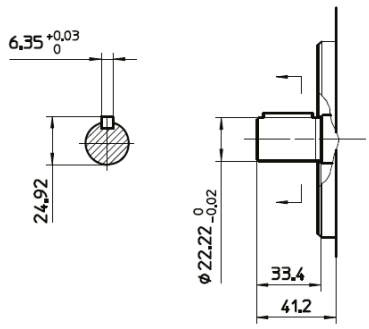

PORT DIMENSIONS
IN = Flange SAE 3000 1 1/4”
OUT = Flange SAE 6000 3/4”
D1, D2 = 1/2” BSPP

	Mass KG
PVPC-*- 3029	18

PVPC-*-4046

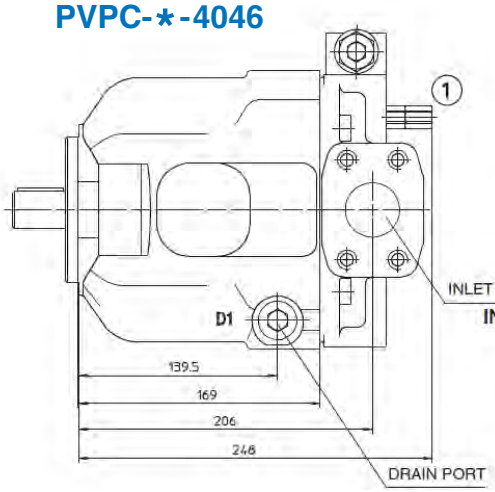

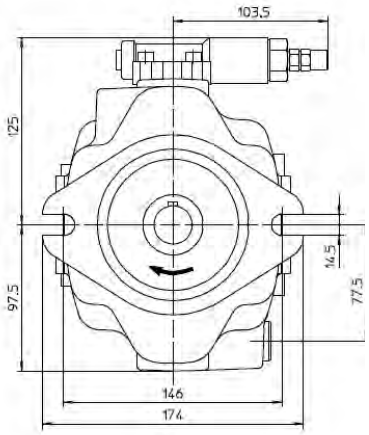

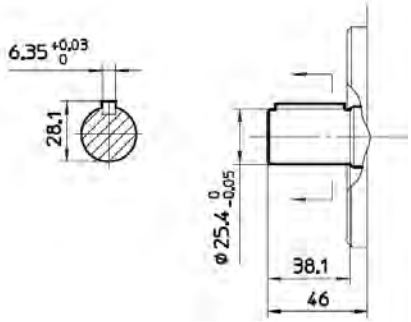

PORT DIMENSIONS
IN = Flange SAE 3000 1 1/2”
OUT = Flange SAE 6000 1”
D1, D2 = 1/2” BSPP

	Mass KG
PVPC-*- 4046	24

PVPC-*-5073

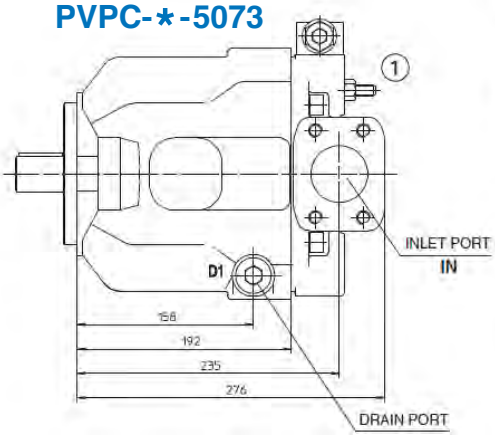

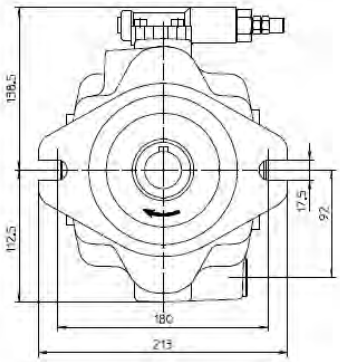

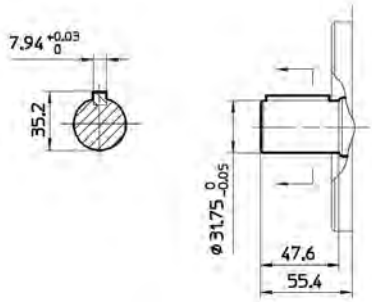

PORT DIMENSIONS
IN = Flange SAE 3000 2”
OUT = Flange SAE 6000 1 1/4”
D1, D2 = 3/4” BSP

	Mass KG
PVPC-*- 5073	33
PVPV-*-5090	33

Hydrastore
Hydraulic Systems & Components

K3VL KAWASAKI OPEN CIRCUIT AXIAL PISTON PUMP

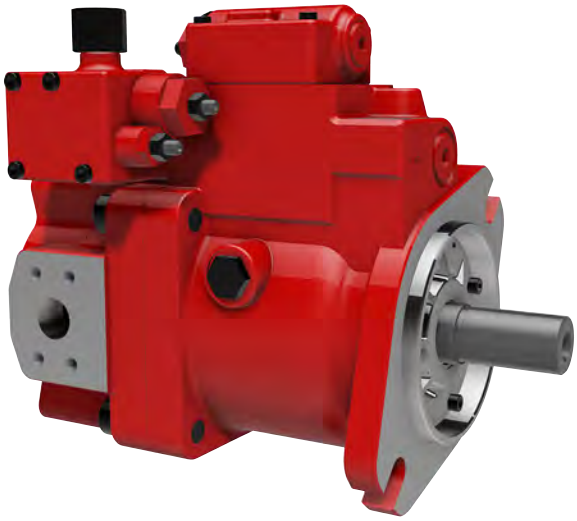

The K3VL series swash plate type axial piston pumps are designed to satisfy the marine, mobile and industrial markets where a medium/high pressure variable displacement pump is required.

K3VL pumps are available in nominal displacements ranging from 28 to 200 cm/rev with various pressure, torque limiter and combination of load sensing control options.

Ordering Chart

Part No.	Description	Displacement (cc/rev.)	Max. pressure (bar)
29L35N0SP0	K3VL28/C-1NRKM-P0-C/W ROT PUMP WITH PRESS CUT OFF	28	320
M29L43N0SP100	K3VL45/B-1NRKM-P0/1-00-C/W ROT WITH PRESS CUT OFF	45	320
29L83N0SP100	K3VL80/B-1NRKM-P0/1-00-C/W ROT WITH PRESS CUT OFF	80	320
29LG3N0SP100	K3VL112/B-1NRKM-P0/1-00-C/W ROT WITH PRESS CUT OFF	112	320
29LH3N0SP100	K3VL140/B-1NRKM-P0/1-00-C/W ROT WITH PRESS CUT OFF	140	320
29LK3N0SP100	K3VL200/B-1NRKM-P0/1-00-C/W ROT WITH PRESS CUT OFF	200	320
29L35N0SL0	K3VL28/C-1NRKM-L0-C/W ROT PUMP WITH LOAD SENSE	28	320
29L43N0SL100	K3VL45/B-1NRKM-L0/1-00-C/W ROT WITH LOAD SENSE	45	320
29L83N0SL100	K3VL80/B-1NRKM-L0/1-00-C/W ROT WITH LOAD SENSE	80	320
29LG3N0SL100	K3VL112/B-1NRKM-L0/1-00-C/W ROT WITH LOAD SENSE	112	320
29LH3N0SL100	K3VL140/B-1NRKM-L0/1-00-C/W ROT WITH LOAD SENSE	140	320
29LK3N0SL100	K3VL200/B-1NRKM-L0/1-00-C/W ROT WITH LOAD SENSE	200	320

NOTE Torque limited pumps are available (some stocked) and we have in house facilities to set pumps to specified requirements.

The above options are standard pumps fitted with either Load Sense + Pressure Cut Off (LO) or Press Cut Off (PO) controllers.

Specifications

Pump Model		K3VL28	K3VL45	K3VL80	K3VL112	K3VL140	K3VL200
Capacity cc/rev		28	45	80	112	140	200
Pressure ratings	Rated (bar)	320					
	Peak (bar	350					
Speed ratings	Self primed (rpm)	3000	2700	2400	2200	2200	1900
	Max. Boosted (rpm)	3600	3250	3000	2700	2500	2200
Minimum operating speed		600					
Case drain pressure	Max continuous (bar)	1					
	Peak (bar)	4					
Weight (kg)		20	27	35	65	65	95
Case fill capacity (L)		0.6	0.6	0.8	1.5	1.5	3
Temperature range		minus 20 to 95					
Viscosity range (cSt)		10 to 1000 - viscosities greater than 200 will require a no load warm up					
Maximum contamination level		ISO 44060 18/15					
Standard SAE mounting flange and shaft	Mounting	2 - bolt SAE B		2 - bolt SAE C	4 - bolt SAE D		4 - bolt SAE E
	Shaft	Parallel keyed shaft	Parallel keyed shaft	Parallel keyed shaft	SAE D spline or key		SAE D spline or key and spline
Optional SAE mounting flange and shaft	Mounting	/			2 - bolt SAE C		/
	Shaft	/	SAE B spline	/	SAE C or C-C		SAE F spline
Standard ISO mounting flange and shaft	Mounting	/	2 bolt ISO 100		4 bolt ISO 180		/
	Shaft	/	ISO 25mm key		ISO 45mm key		/

The following chart shows the options of controller available for each pump size.
Please contact the sales office for details.

Regulator type		28	45	80	112	140	200
LO	Load sense + pressure cut off (with LS bleed)	●	●	●	●	●	●
L1	Load sense + pressure cut off (with LS bleed blocked)	●	●	●	●	●	●
LV	Load sense + intergral proportional relief	/	●	●	●	●	●
PO	Pressure cut-off	●	●	●	●	●	●
PV	Pressure cut-off & intergral proportional relief	/	●	●	●	●	●
/1	Torque limiter (with provision for torque limiter or displacement control	/	●	●	●	●	●
H#	High setting range (available for all '/1','/2' & '/3' options)	/	●	●	●	●	●
E0	Electric displacement control (pilot pressure required) AMP flying lead 24v DC	/	●	●	●	●	●
QO	Pilot operated displacement control	/	●	●	●	●	●

All pumps are single section with a thru drive cover plate, side ports, clockwise rotation with standard SAE mounting flange and parallel keyed shaft.
Anti clockwise rotation, splined shafts and metric ISO mountings are available on request.

K3VL28

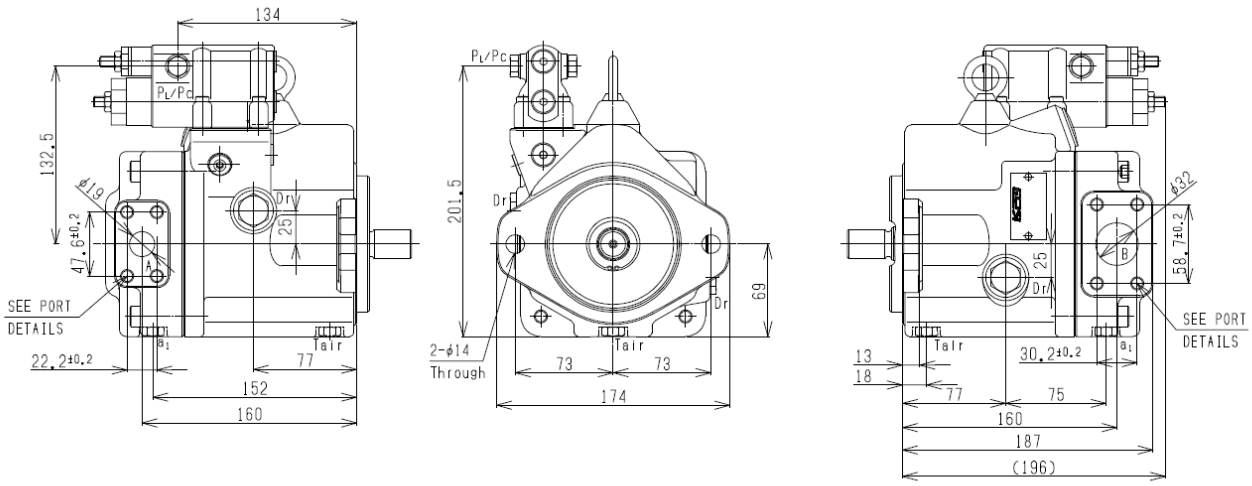

K3VL45

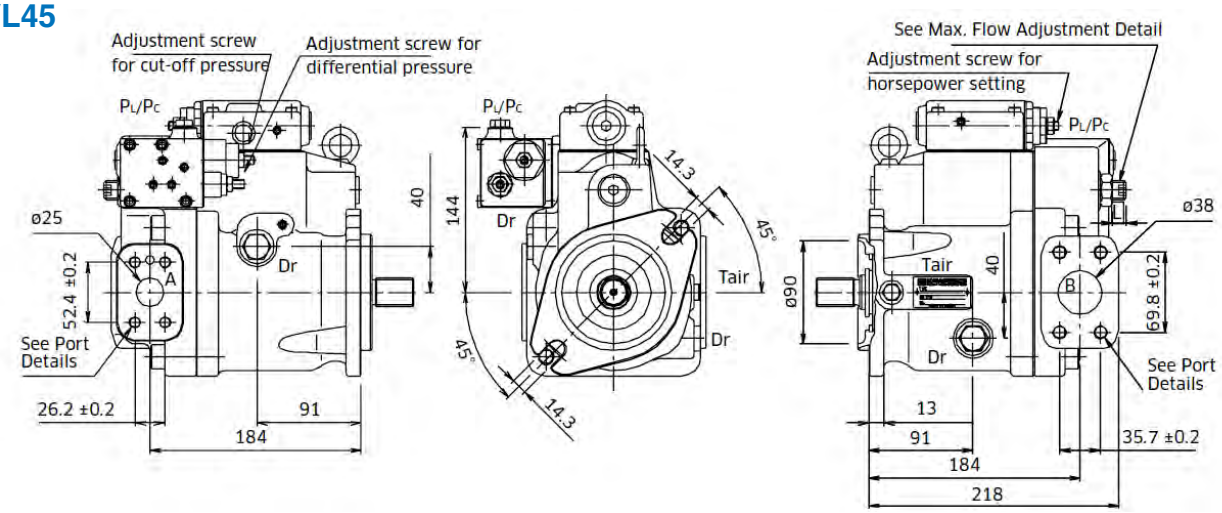

K3VL80

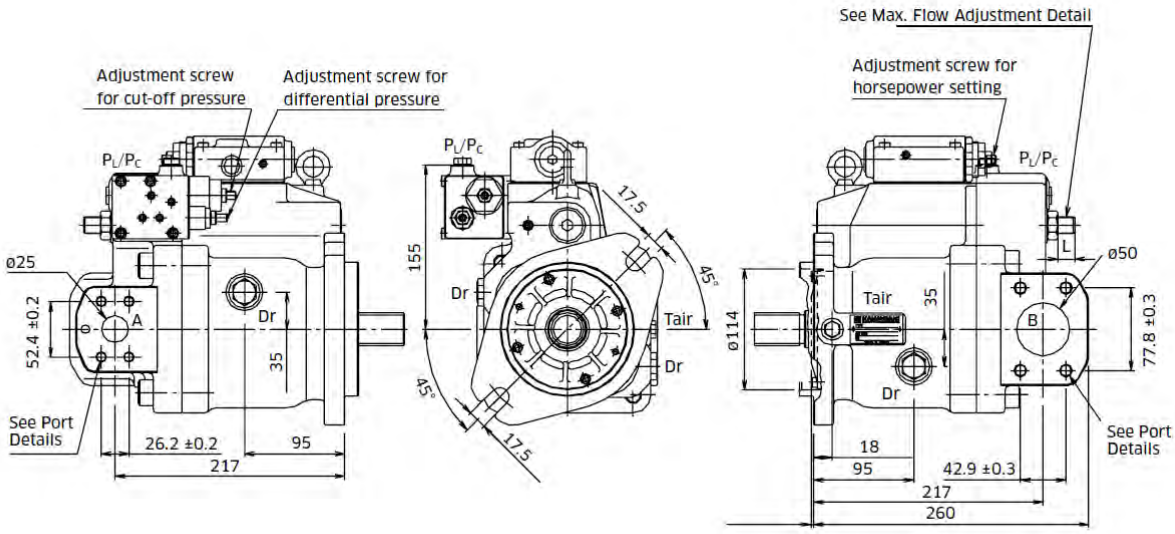

K3VL 112+140

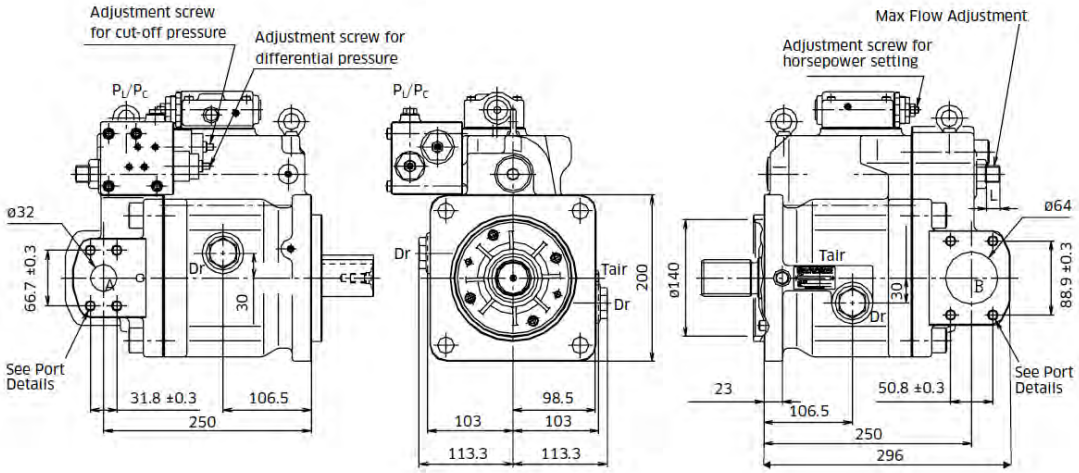

K3VL 200

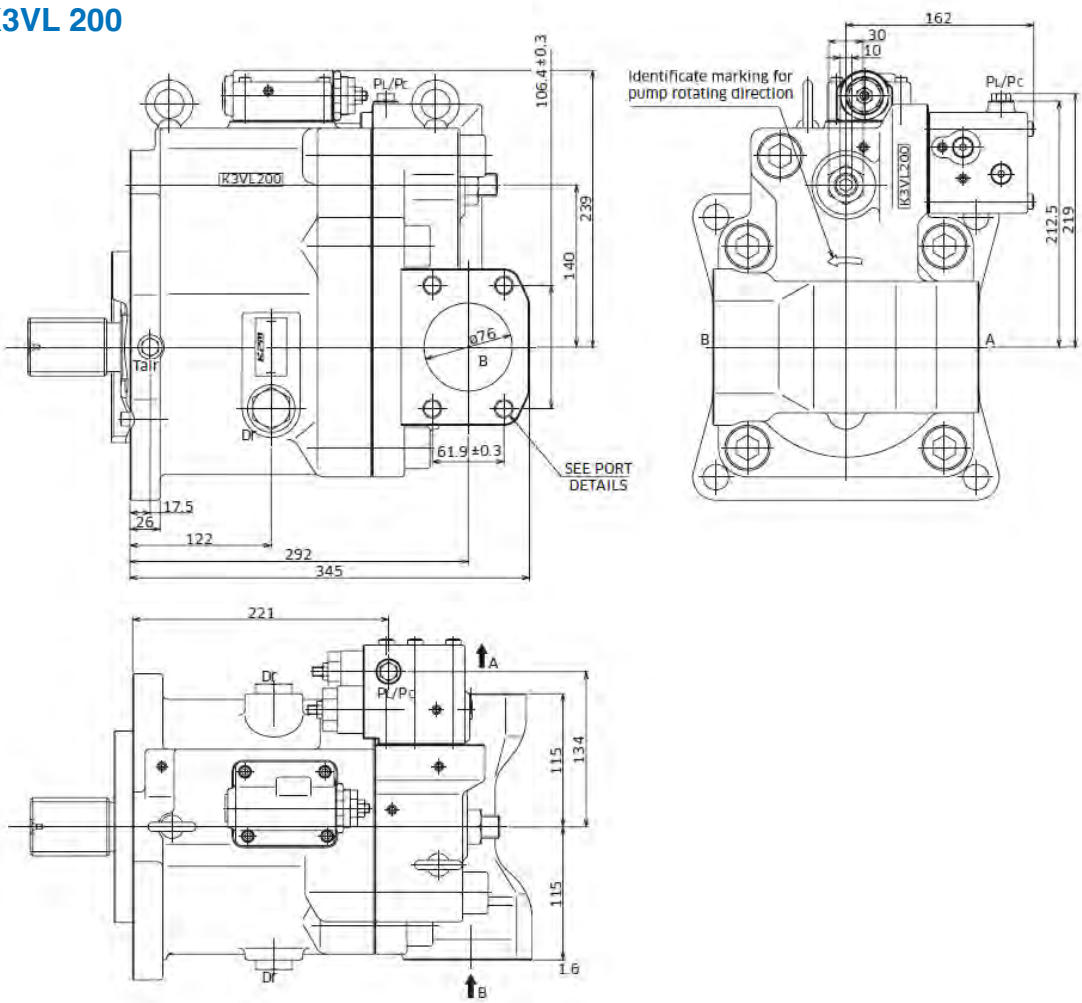

Hydrastore
Hydraulic Systems & Components

PFE ATOS VANE PUMP

PFE are fixed displacement -twelve vane pumps, cartridge design with integral hydraulic balancing for high pressure operation, long service life and low noise level.

Ordering Chart

Part No.	Description	Displacement (cc/rev.)	Max. pressure (bar)	Speed range (rpm)	Performance columns detailing flow rate and power consumption at varying Delta P							
					7 bar		70 bar		140 bar		210 bar	
					l/min	kW	l/min	kW	l/min	kW	l/min	kW
PFE-31016-1DT	FIXED VANE PUMP 16.5CC/REV C/W ROTATION	16.5	210	800-2800	23	0.5	21	3	19	5	16	8.3
PFE-31022-1DT	FIXED VANE PUMP 21.6CC/REV C/W ROTATION	21.6	210	800-2800	30	0.6	28	4	26	7	23	10.8
PFE-31028-1DT	FIXED VANE PUMP 28.1CC/REV C/W ROTATION	28.1	210	800-2800	40	0.8	38	5.5	36	10	33	14
PFE-31036-1DT	FIXED VANE PUMP 35.6CC/REV C/W ROTATION	35.6	210	800-2800	15	1	49	7	46	12.5	43	17.8
PFE-31044-1DT	FIXED VANE PUMP 43.7CC/REV C/W ROTATION	43.7	210	800-2500	63	1.3	61	8	58	15.5	55	22
PFE-41029-1DT	FIXED VANE PUMP 29.3CC/REV C/W ROTATION	29.3	210	800-2500	41	0.8	39	5.5	37	10	34	14.7
PFE-41037-1DT	FIXED VANE PUMP 36.6CC/REV C/W ROTATION	36.6	210	800-2500	52	1	50	7	48	12.5	45	18.3
PFE-41045-1DT	FIXED VANE PUMP 45CC/REV C/W ROTATION	45	210	800-2500	64	1.3	62	8.5	60	16	57	22.6
PFE-41056-1DT	FIXED VANE PUMP 55.8CC/REV C/W ROTATION	55.8	210	800-2500	80	1.6	78	11	75	21	72	28
PFE-41070-1DT	FIXED VANE PUMP 69.9CC/REV C/W ROTATION	69.9	210	800-2500	101	2	98	13.5	95	26	91	35
PFE-41085-1DT	FIXED VANE PUMP 85.3CC/REV C/W ROTATION	85.3	210	800-2000	124	2.4	121	16	118	32	114	43
PFE-51090-1DT	FIXED VANE PUMP 90CC/REV C/W ROTATION	90	210	800-2200	128	2.7	124	17	119	33	114	45
PFE-51110-1DT	FIXED VANE PUMP 109.6CC/REV C/W ROTATION	109.6	210	800-2200	157	3.2	152	21	147	40	141	55
PFE-51129-1DT	FIXED VANE PUMP 129.2CC/REV C/W ROTATION	129.2	210	800-2200	186	3.7	180	25	174	47	168	65
PFE-51150-1DT	FIXED VANE PUMP 150.2CC/REV C/W ROTATION	150.2	210	800-1800	215	4.2	211	29	204	55	197	75

All pumps are available with anti-clock rotation & splined shafts.

CYLINDRICAL SHAFT KEYED

1 = for single and multiple pumps (only first position) supplied as standard if not specified in the model code
2 = for single and multiple pumps (only first position) long version (only for PFE-41 and PFE-51)
3 = for single and multiple pumps (only first position) for high torque applications

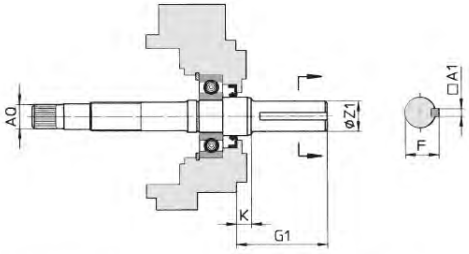

Model	Keyed shaft type 1 (standard)					Only for through shaft execution
	A1	F	G1	K	ØZ1	Ø AQ
PFE-31	4,78	21,11	56,00	8,00	19,05	SAE 16/32-9T
	4,75	20,94			19,00	
PFE-41	4,78	24,54	59,00	11,40	22,22	SAE 32/64-24T
	4,75	24,41			22,20	
PFE-51	7,97	35,33	73,00	14	31,75	SAE 16/32-13T
	7,94	35,07			31,70	

T = inlet port
P = outlet port

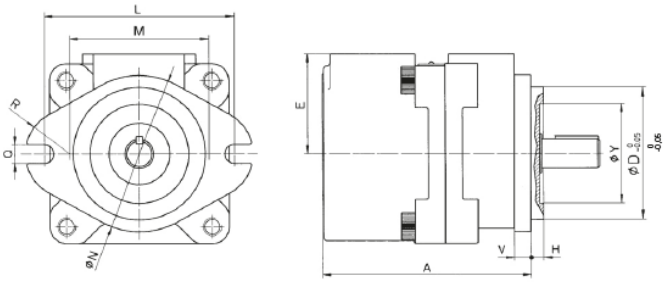

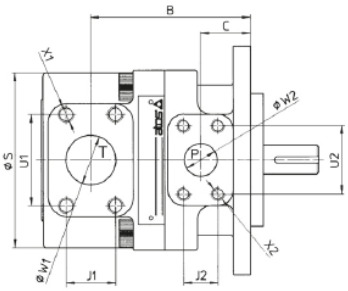

SAE FLANGES
PFE-31: port **T = 1 1/4"**; port **P = 3/4"**
PFE-41: port **T = 1 1/2"**; port **P = 1"**
PFE-51: port **T = 2**; port **P = 1 1/4"**

SAE flanges can be supplied with the pump

Mass:
PFE-31 = 9 kg
PFE-41 = 14 kg
PFE-51 = 25,5 kg

Model	A	B	C	ØD	E	H	L	M	ØN	Q	R
PFE-31	136	100	28	82,55	70	6,4	106	73	95	11,1	28,5
PFE-41	160	120	38	101,6	76,2	9,7	146	107	120	14,3	34
PFE-51	186,5	125	38	127	82,6	12,7	181	143,5	148	17,5	35
Model	**ØS**	**U1**	**U2**	**V**	**ØW1**	**ØW2**	**J1**	**J2**	**X1**	**X2**	**ØY**
PFE-31	114	58,7	47,6	10	32	19	30,2	22,2	M10X20	M10X17	47
PFE-41	134	70	52,4	13	38	25	35,7	26,2	M12X20	M10X17	76
PFE-51	160	77,8	58	15	51	32	42,9	30,2	M12X20	M10X20	76

PMP 20-E-S / PMP 20-S

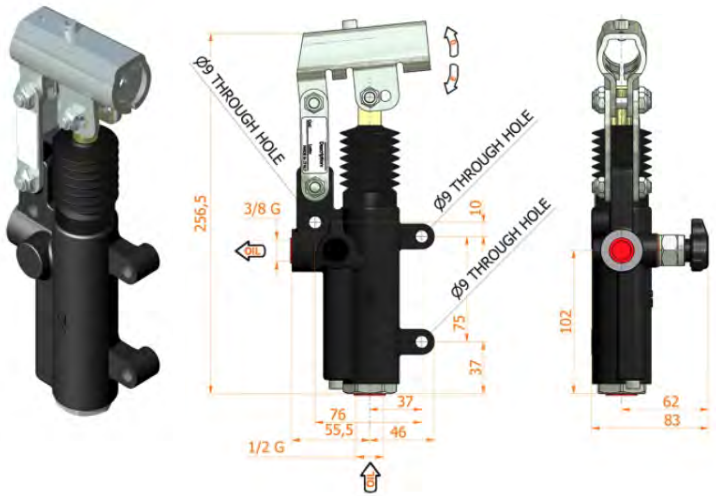

SPECIFICATIONS:

- Cast iron body
- Piston treated with Niploy
- White zinc plated support lever
- Lever connection Ø 27
- White zinc plated external parts
- Standard colour black

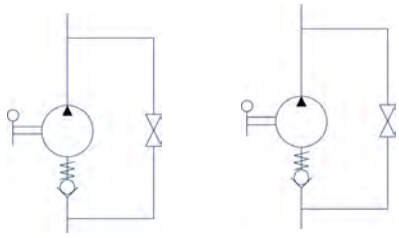

PMP 20-e-s PMP 20-s

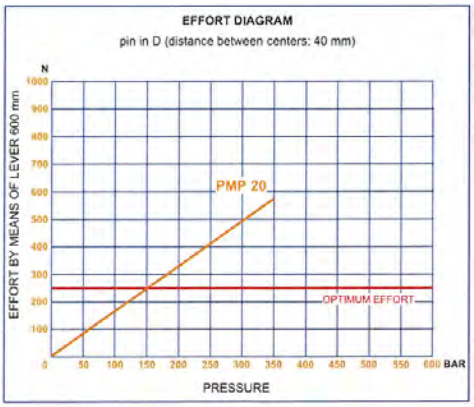

Ordering Chart

Part No.	Description	Release valve	Displacement (cc/stroke)	Max. pressure (bar)
PMP20-E-S	HAND PUMP 20CC/STROKE	NO	20	350
PMP20-S	HAND PUMP 20CC/ STROKE+RELEASE VALVE	YES	20	350

PMO 50-E-S / PMO 50-S

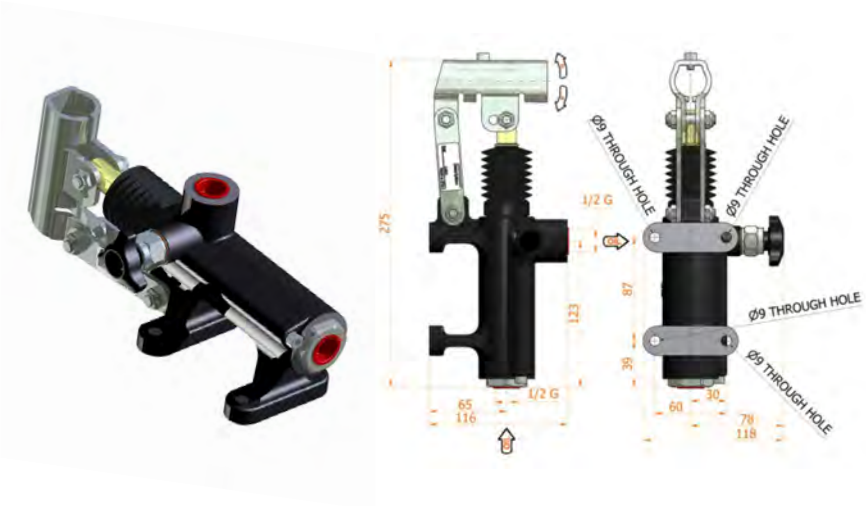

SPECIFICATIONS:

- Cast iron body
- Piston treated with Niploy
- White zinc plated support lever
- Lever connection Ø 27
- White zinc plated external parts
- Standard colour black

PMO 50-e-s PMO 50-s

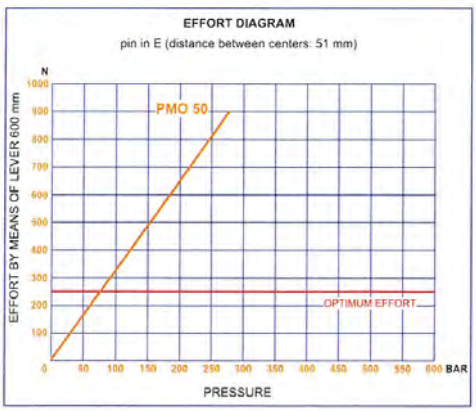

Ordering Chart

Part No.	Description	Release valve	Displacement (cc/stroke)	Max. pressure (bar)
PMO50-E-S	HAND PUMP 50CC/STROKE	NO	50	280
PMO50-S	HAND PUMP 50CC/ STROKE+RELEASE VALVE	YES	50	280

PM 12 25 45 S

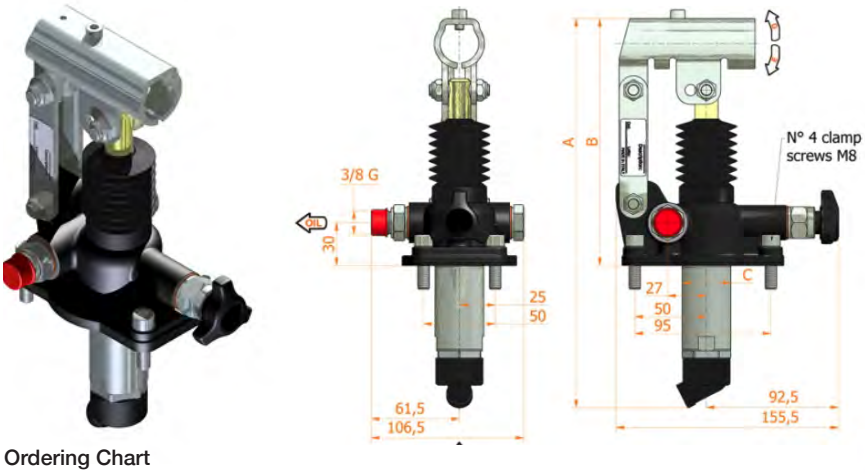

SPECIFICATIONS:

- Cast iron body
- Piston treated with Niploy
- White zinc plated support lever
- Lever connection Ø 27
- White zinc plated external parts
- Standard colour black
- Oil tank mounting kit included

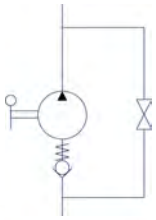

Ordering Chart

Part No.	Description	Release valve	Displacement (cc/stroke)	Max. pressure (bar)
PM12-S	HAND PUMP 12CC/STROKE+RELEASE VALVE	YES	12	380
PM25-S	HAND PUMP 25CC/STROKE+RELEASE VALVE	YES	25	350
PM45-S	HAND PUMP 45CC/STROKE+RELEASE VALVE	YES	45	280

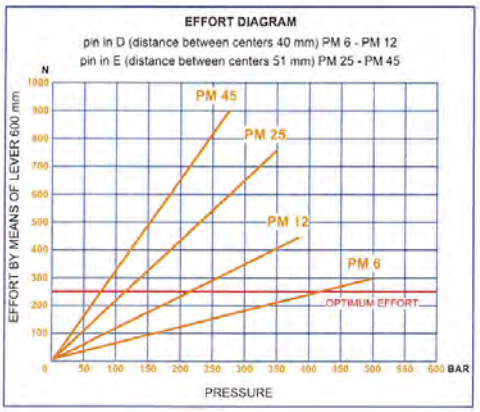

PM 12 25 45 byB-S

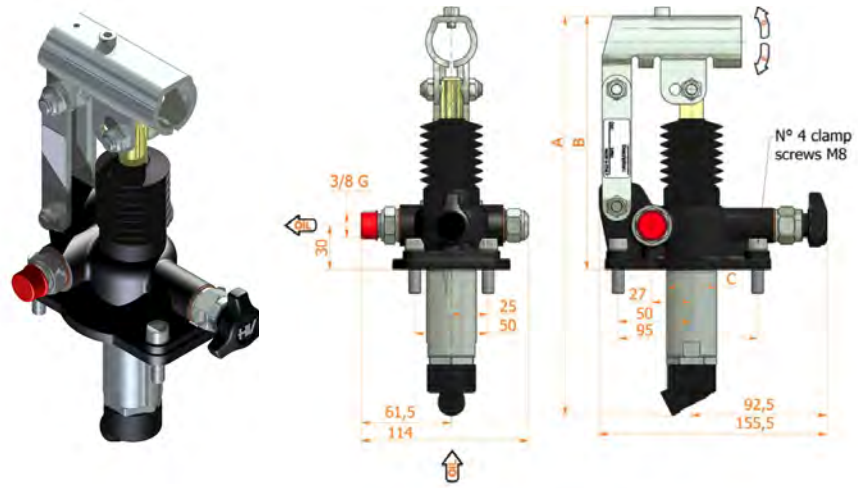

SPECIFICATIONS:

- Cast iron body
- Piston treated with Niploy
- White zinc plated support lever
- Lever connection Ø 27
- White zinc plated external parts
- Standard colour black
- Oil tank mounting kit included
- Pressure relief valve standard setting: 100 bar

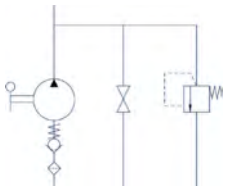

Ordering Chart

Part No.	Description	Release valve	Displacement (cc/stroke)	Max. pressure (bar)
PM12-BYB-S	HAND PUMP 12CC/STROKE+RELEASE+RELIEF VALVES	YES	12	380
PM25-BYB-S	HAND PUMP 25CC/STROKE+RELEASE+RELIEF VALVES	YES	25	350
PM45-BYB-S	HAND PUMP 45CC/STROKE+RELEASE+RELIEF VALVES	YES	45	280

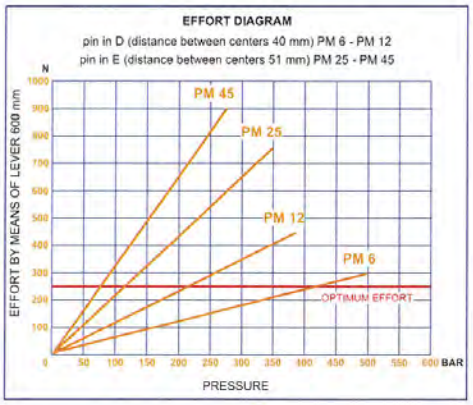

Hydrastore
Hydraulic Systems & Components

PMDVB 12 25 45

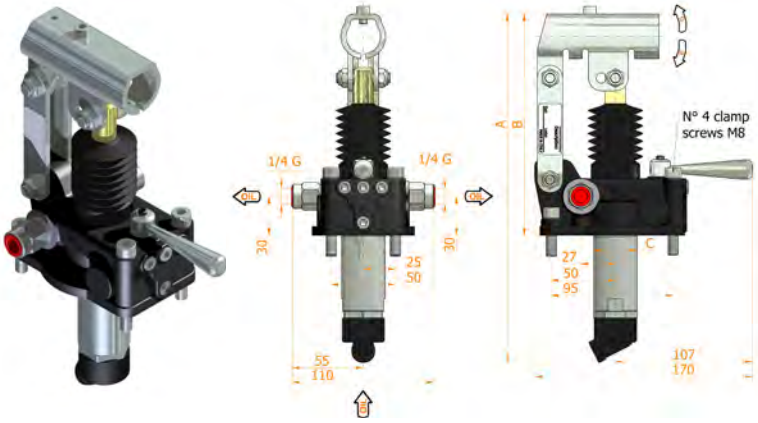

SPECIFICATIONS:

- Cast iron body
- Piston treated with Niploy
- White zinc plated support lever
- Lever connection Ø 27
- White zinc plated external parts
- Standard colour black
- Oil tank mounting kit included
- Directional control valve

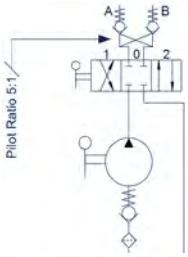

Ordering Chart

Part No.	Description	Displacement (cc/stroke)	Max. pressure (bar)
PMDVB12CC-S	HAND PUMP + DCV + PO CHECK 12CC/STROKE	12	380
PMDVB25CC-S	HAND PUMP + DCV + PO CHECK 25CC/STROKE	25	350
PMDVB45CC-S	HAND PUMP + DCV + PO CHECK 45CC/STROKE	45	280

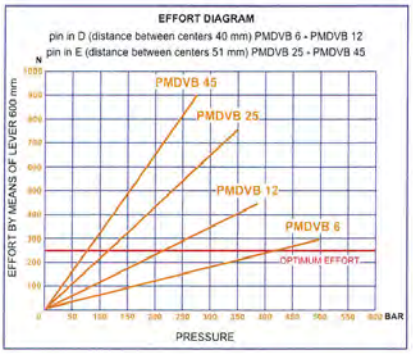

Dual pilot operated check valves, 5:1

HAND PUMP TANK (STEEL) WITH SUCTION PIPE & BREATHER

Steel hand pump reservoir supplied complete with suction pipe.

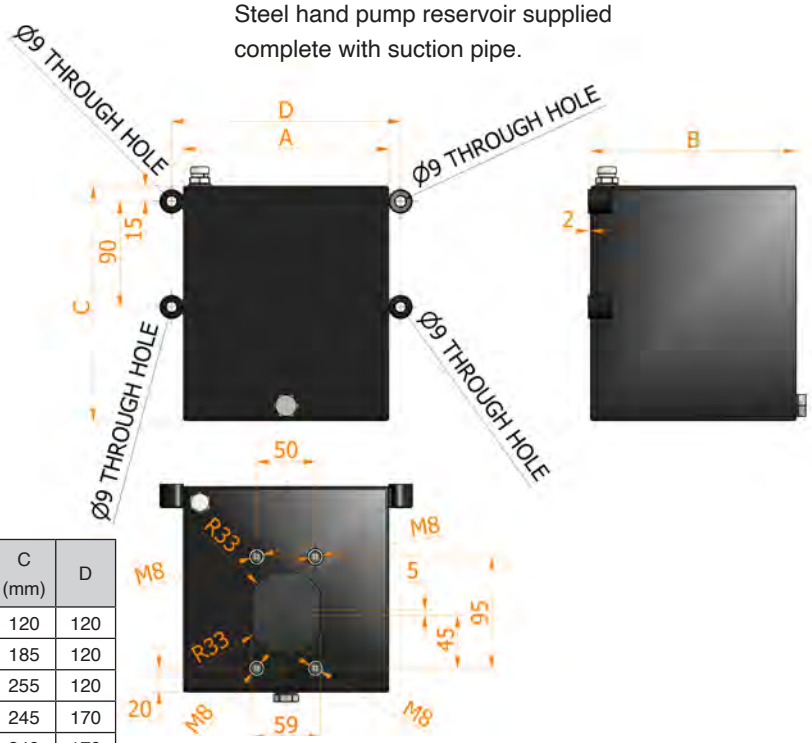

Ordering Chart

Part No.	Description	A (mm)	B (mm)	C (mm)	D
S1-AC-R	1 LITRE HAND PUMP RESERVOIR	100	150	120	120
S2-AC-R	2 LITRE HAND PUMP RESERVOIR	100	150	185	120
S3-AC-R	3 LITRE HAND PUMP RESERVOIR	100	150	255	120
S5-AC-R	5 LITRE HAND PUMP RESERVOIR	150	150	245	170
S7-AC-R	7 LITRE HAND PUMP RESERVOIR	150	150	340	170
S10-AC-R	10 LITRE HAND PUMP RESERVOIR	150	150	485	170

HAND PUMP HANDLE

Handle ordered separately

Part No.	Description
LPM27 X 600	HAND PUMP LEVER 600mm

Industrial valves and electronic drivers

ATOS CETOP 03 DCV 22
ATOS CETOP 05 DCV 24
ATOS RELIEF VALVE SANDWICH MODULE 26
ATOS MODULAR RELIEF VALVES CETOP 03 & 05 28
ATOS FLOW CONTROL SANDWICH MODULE 30
ATOS CHECK VALVE SANDWICH MODULE 32
DUAL OVERCENTRE VALVE SANDWICH MODULE, CETOP 03 34
ATOS PRESSURE COMPENSATOR MODULE CETOP 03 & 05 36
CETOP BOLTS 37
DIN 43650 AND HIRSCHMANN CONNECTORS 37
PROPORTIONAL DIRECTIONAL VALVE, CETOP 03 38
PROPORTIONAL RELIEF VALVE
RZME – DIRECT ACTING 40
E-MI-AS-IR - PLUG ON DIGITAL DRIVER FOR
SINGLE SOLENOID OPERATION 42
PROPORTIONAL DRIVER- DIN RAIL MOUNT 42

Hydrastore
Hydraulic Systems & Components

ATOS CETOP 03 DCV

Spool type, two or three position direct operating valves.

Solenoid tubes. (2)

Wet type screwed tube, different for AC and DC power supply, with integrated manual override pin. (4)

Interchangeable coils, specific for AC or DC power supply, easily replaceable without tools. Purchased separately

Wide range of interchangeable spools. (1)
Valve body (3) is 3 chamber type.
Mounting surface: ISO 4401 size 06
Max flow: 50 l/min
Max pressure: 350 bar.

Ordering Chart

Part No.	Symbol	Description	Max. flow (lpm)	Max. pressure (bar)
DHE-0610-X-00/ DC	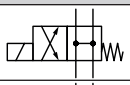	CETOP 3 SINGLE SOLENOID DIRECTIONAL VALVE	50	350
DHE-0610-X-00/ AC	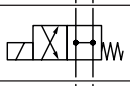	CETOP 3 SINGLE SOLENOID DIRECTIONAL VALVE	50	350
DHE-0611-X-00/ DC	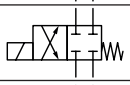	CETOP 3 SINGLE SOLENOID DIRECTIONAL VALVE	50	350
DHE-0611-X-00/ AC	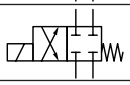	CETOP 3 SINGLE SOLENOID DIRECTIONAL VALVE	50	350
DHE-0613-X-00/ DC	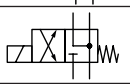	CETOP 3 SINGLE SOLENOID DIRECTIONAL VALVE	50	350
DHE-0613-X-00/ AC	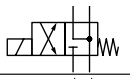	CETOP 3 SINGLE SOLENOID DIRECTIONAL VALVE	50	350
DHE-0631/2-X-00/ DC	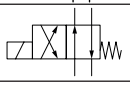	CETOP 3 SINGLE SOLENOID DIRECTIONAL VALVE	50	350
DHE-0631/2-X-00/ AC	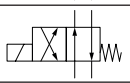	CETOP 3 SINGLE SOLENOID DIRECTIONAL VALVE	50	350
DHE-0710-X-00/ DC	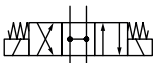	CETOP 3 DOUBLE SOLENOID DIRECTIONAL VALVE	50	350
DHE-0710-X-00/ AC	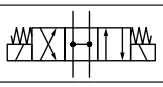	CETOP 3 DOUBLE SOLENOID DIRECTIONAL VALVE	50	350
DHE-0711-X-00/ DC	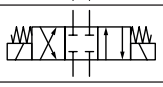	CETOP 3 DOUBLE SOLENOID DIRECTIONAL VALVE	50	350
DHE-0711-X-00/ AC	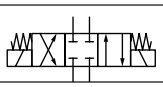	CETOP 3 DOUBLE SOLENOID DIRECTIONAL VALVE	50	350
DHE-0713-X-00/ DC	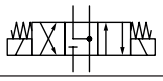	CETOP 3 DOUBLE SOLENOID DIRECTIONAL VALVE	50	350
DHE-0713-X-00/ AC	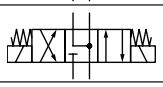	CETOP 3 DOUBLE SOLENOID DIRECTIONAL VALVE	50	350
DHE-0714-X-00/ DC	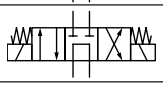	CETOP 3 DOUBLE SOLENOID DIRECTIONAL VALVE	50	350
DHE-0714-X-00/ AC	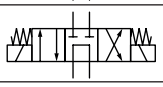	CETOP 3 DOUBLE SOLENOID DIRECTIONAL VALVE	50	350

Ordering Chart - Cetop 03 solenoid coils

Part No.	Description	Picture of item
SP-COE-110/50/60/AC	CETOP 3 SOLENOID COIL -110VAC/50/60HZ	
SP-COE-230/50/60/AC	CETOP 3 SOLENOID COIL -230VAC/50/60HZ	
SP-COE-12DC	CETOP 3 SOLENOID COIL -12VDC	
SP-COE-24DC	CETOP 3 SOLENOID COIL -24VDC	

Note: Valves must be ordered specifically for AC or DC voltages

Note: Valves supplied without coils. Coils ordered separately.

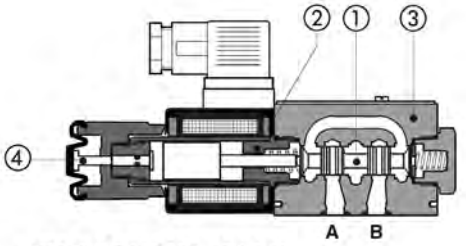

DHE-061*/WP-X *AC

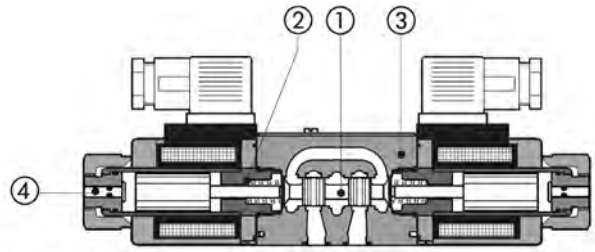

DHE-071*-X *DC

Q/ΔP DIAGRAMS based on mineral oil ISO VG 46 at 50°C

Spool type \ Flow direction	P→A	P→B	A→T	B→T	P→T
0, 0/1	A	A	C	C	D
1, 1/1, 1/9	D	C	C	C	
3, 3/1	D	D	A	A	
4, 4/8, 5, 5/1, 49, 58, 58/1, 94	F	F	G	C	E
1/2, 0/2	D	D	D	D	
6, 7, 16, 17	D	D	D	D	
8	A	A	E	E	
2	D	D			
2/2	F	F			
09, 19, 90, 91	E	E	D	D	
39, 93	F	F	G	G	

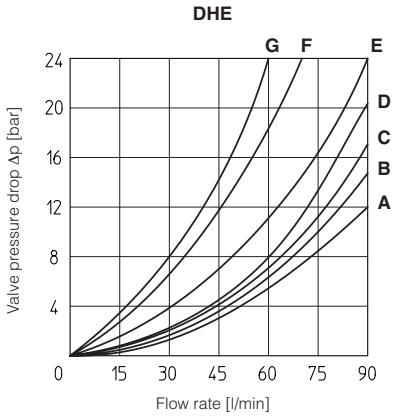

OPERATING LIMITS based on mineral oil ISO VG 46 at 50°C

The diagrams have been obtained with warm solenoids and power supply at lowest value (V_{nom} - 10%). The curves refer to application with symmetrical flow through the valve (i.e. P→A and B→T). In case of asymmetric flow and if the valves have the devices for controlling the switching times the operating limits must be reduced.

Curve	Spool type AC	Spool type DC
A	1, 1/2, 8	0, 0/1, 1, 1/2, 3, 8
B	0, 0/1, 0/2, 1/1, 1/9, 3	0/2, 1/1, 6, 7, 1/9, 19
C	3, 3/1, 6, 7	3/1, 4, 4/8, 5, 5/1, 16, 17, 19, 39, 49, 58, 58/1, 09, 90, 91, 93, 94
D	4, 4/8, 5, 5/1, 16, 17, 19, 39, 58, 58/1, 09, 90, 91, 93, 94	2, 2/2
E	2, 2/2	-

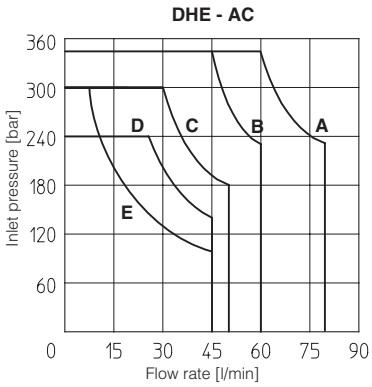

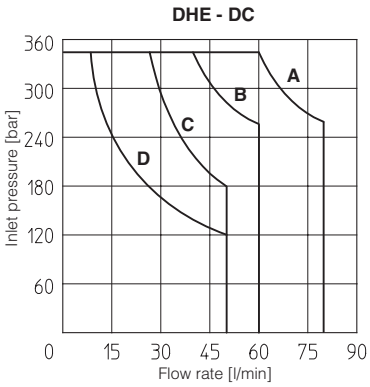

MAIN CHARACTERISTICS, SEALS AND HYDRAULIC FLUID - for other fluids not included in below table, consult our technical office

Assembly position / location	Any position		
Subplate surface finishing	Roughness index Ra 0,4 - flatness ratio 0,01/100 (ISO 1101)		
MTTFd values according to EN ISO 13849	150 years, for further details see technical table P007		
Ambient temperature	Standard execution = -30°C ÷ +70°C /PE option = -20°C ÷ +70°C /BT option = -40°C ÷ +70°C		
Seals, recommended fluid temperature	NBR seals (standard) = -20°C ÷ +60°C, with HFC hydraulic fluids = -20°C ÷ +50°C FKM seals (/PE option) = -20°C ÷ +80°C HNBR seals (/BT option) = -40°C ÷ +60°C, with HFC hydraulic fluids = -40°C ÷ +50°C		
Recommended viscosity	15÷100 mm^2/s - max allowed range 2.8 ÷ 500 mm^2/s		
Fluid contamination class	ISO 4406 class 21/19/16 NAS 1638 class 10, in line filters of 25 μm (β25 ≥75 recommended)		
Hydraulic fluid	**Suitable seals type**	**Classification**	**Ref. Standard**
Mineral oils	NBR, FKM, HNBR	HL, HLP, HLPD, HVLP, HVLPD	DIN 51524
Flame resistant without water	FKM	HFDU, HFDR	ISO 12922
Flame resistant with water	NBR, HNBR	HFC	
Flow direction	As shown in the symbols of table 2		
Operating pressure	Ports P,A,B: **350** bar; Port T **210** bar for DC version; **160** bar for AC version		
Rated flow	See diagrams Q/Δp at section 6		
Maximum flow	**80 l/min**, see operating limits at section 7		

ATOS CETOP 05 DCV

Spool type, two or three position direct operating valves.
Solenoid tubes. (2)
Wet type screwed tube, different for AC and DC power supply, with integrated manual override pin. (4)
Interchangeable coils, specific for AC or DC power supply, easily replaceable without tools. Purchased separately.
Wide range of interchangeable spools. (1)
Valve body (3) is 5 chamber type for all DC versions and 3 chambers for standard AC versions.
Mounting surface: ISO 4401 size 10.
Max flow: 100 l/min.
Max pressure: 350 bar.

Note: Valves must be ordered specifically for AC or DC voltage

Note: Valves supplied without coils. Coils ordered separately.

Ordering Chart

Part No.	Symbol	Description	Max. flow (lpm)	Max. pressure (bar)
DKE-1610-X-00/ DC	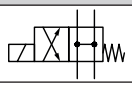	CETOP 5 SINGLE SOLENOID DIRECTIONAL VALVE	100	350
DKE-1610-X-00/ AC	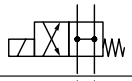	CETOP 5 SINGLE SOLENOID DIRECTIONAL VALVE	100	350
DKE-1611-X-00/ DC	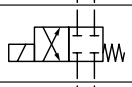	CETOP 5 SINGLE SOLENOID DIRECTIONAL VALVE	100	350
DKE-1611-X-00/ AC	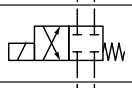	CETOP 5 SINGLE SOLENOID DIRECTIONAL VALVE	100	350
DKE-1613-X-00/ DC	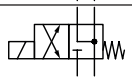	CETOP 5 SINGLE SOLENOID DIRECTIONAL VALVE	100	350
DKE-1613-X-00/ AC	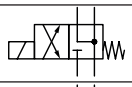	CETOP 5 SINGLE SOLENOID DIRECTIONAL VALVE	100	350
DKE-1631/2-X-00/ DC	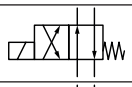	CETOP 5 SINGLE SOLENOID DIRECTIONAL VALVE	100	350
DKE-1631/2-X-00/ AC	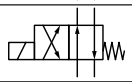	CETOP 5 SINGLE SOLENOID DIRECTIONAL VALVE	100	350
DKE-1710-X-00/ DC	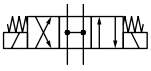	CETOP 5 DOUBLE SOLENOID DIRECTIONAL VALVE	100	350
DKE-1710-X-00/ AC	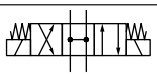	CETOP 5 DOUBLE SOLENOID DIRECTIONAL VALVE	100	350
DKE-1711-X-00/ DC	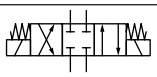	CETOP 5 DOUBLE SOLENOID DIRECTIONAL VALVE	100	350
DKE-1711-X-00/ AC	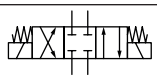	CETOP 5 DOUBLE SOLENOID DIRECTIONAL VALVE	100	350
DKE-1713-X-00/ DC	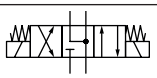	CETOP 5 DOUBLE SOLENOID DIRECTIONAL VALVE	100	350
DKE-1713-X-00/ AC	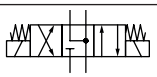	CETOP 5 DOUBLE SOLENOID DIRECTIONAL VALVE	100	350
DKE-1714-X-00/ DC	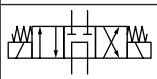	CETOP 5 DOUBLE SOLENOID DIRECTIONAL VALVE	100	350
DKE-1714-X-00/ AC	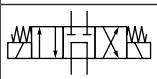	CETOP 5 DOUBLE SOLENOID DIRECTIONAL VALVE	100	350

Ordering Chart - Cetop 05 solenoid coils

Part No.	Description	Picture of item
SP-CAE-110/50/60AC	CETOP 5 SOLENOID COIL - 110VAC/50/60HZ	
SP-CAE-230/50/60AC	CETOP 5 SOLENOID COIL - 230VAC/50/60HZ	
SP-CAE-12DC	CETOP 5 SOLENOID COIL - 12VDC	
SP-CAE-24DC	CETOP 5 SOLENOID COIL - 24VDC	

Q/ΔP DIAGRAMS based on mineral oil ISO VG

Spool type \ Flow direction	P→A	P→B	A→T	B→T	P→T	B→A
0, 0/1, 0/2, 2/2	A	A	B	B		
1, 1/1, 1/9, 6, 8	A	A	D	C		
3, 3/1, 7	A	A	C	D		
4	B	B	B	B	F	
5, 58	A	B	C	C	G	
1/2	B	C	C	B		
19, 91	F	F	G	G		H
39, 93	F	F	G	G		H

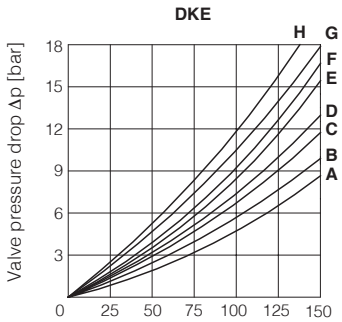

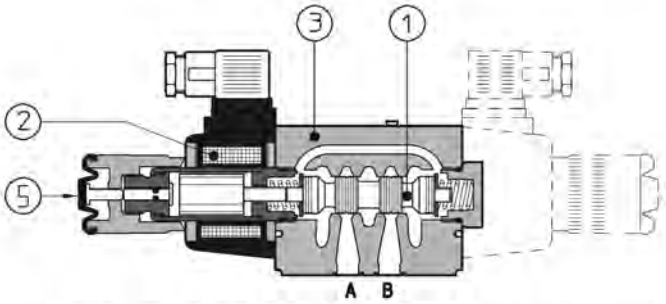

DKE-161*/WP-X *AC (3 CHAMBERS BODY)

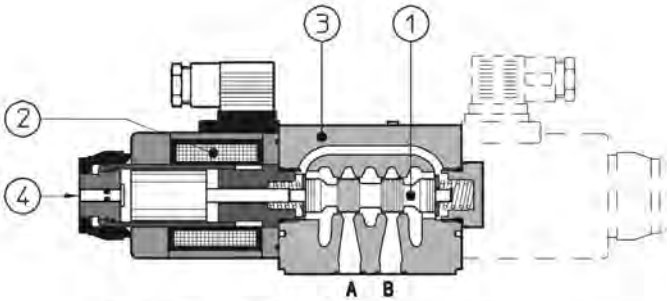

DKE-17*-X *DC (5 CHAMBERS BODY)

OPERATING LIMITS based on mineral oil ISO VG 46 at 50°C

The diagrams have been obtained with warm solenoids and power supply at lowest value (V_{nom} - 10%). The curves refer to application with symmetrical flow through the valve (i.e. P→A and B→T). In case of asymmetric flow and if the valves have the devices for controlling the switching times the operating limits must be reduced.

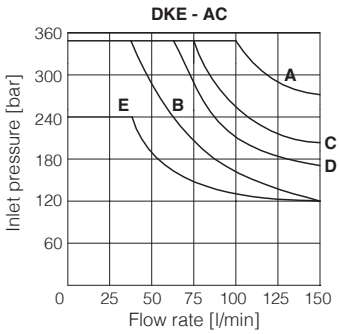

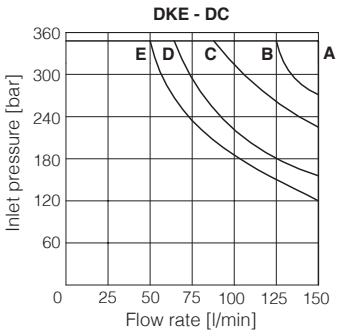

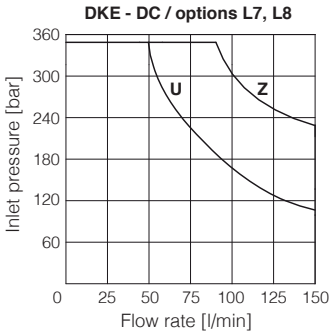

MAIN CHARACTERISTCS, SEALS AND HYDRAULIC FLUIDS - for other fluids not included in below table, consult our technical office

Assembly position / location	Any position for all valves except for type - 170* (without springs) that must be installed with horizontal axis if operated by impulses		
Subplate surface finishing	Roughness index Ra 0,4 - flatness ratio 0,01/100 (ISO 1101)		
MTTFd values according to EN ISO 13849	150 years, for further details see technical table P007		
Ambient temperature	Standard execution = -30°C ÷ +70°C /PE option = -20°C ÷ +70°C /BT option = -40°C ÷ +70°C		
Seals, recommended fluid temperature	NBR seals (standard) = -20°C ÷ +60°C, with HFC hydraulic fluids = -20°C ÷ +50°C FKM seals (/PE option)= -20°C ÷ +80°C HNBR seals (/BT option)= -40°C ÷ +60°C, with HFC hydraulic fluids = -40°C ÷ +50°C		
Recommended viscosity	15÷100 mm²/s - max allowed range 2.8 ÷ 500 mm²/s		
Fluid contamination class	ISO 4406 class 21/19/16 NAS 1638 class 10, in line filters of 25 μm (β25 ≥75 recommended)		
Hydraulic fluid	**Suitable seals type**	**Classification**	**Ref. Standard**
Mineral oils	NBR, FKM, HNBR	HL, HLP, HLPD, HVLP, HVLPD	DIN 51524
Flame resistant without water	FKM	HFDU, HFDR	ISO 12922
Flame resistant with water	NBR, HNBR	HFC	
Flow direction	As shown in the symbols of table 2		
Operating pressure	Ports P,A,B: **350** bar; Port T **210** bar for DC version (**250** bar with option /Y); **160** bar for AC version		
Rated flow	See diagrams Q/Δp at section 6		
Maximum flow	**150 l/min**, see operating limits at section 7		

Coils characteristics

Insulation class	**H** (180°C) for DC coils **F** (155°C) for AC coils Due to the occuring surface temperatures of the solenoid coils, the European standards EN ISO 13732-1 and EN ISO 4413 must be taken into account
Protection degree to DIN EN 60529	**IP 65** (with connectors 666, 667, 669 correctly assembled)
Relative duty factor	100%
Supply voltage and frequency	See electric feature 5
Supply voltage tolerance	± 10%
Certification	**cURus** North American Standard

Hydrastore
Hydraulic Systems & Components

ATOS RELIEF VALVE SANDWICH MODULE CETOP 03 & 05

HM and KM are double stage pressure relief valves with balanced poppet. (1)
The pressure adjustment is modified by removing the protective cap,(4) loosening the locking nut (2) and turning the adjustment screw.(3) Optional versions with setting adjustment by handwheel are available on request. Clockwise rotation increases the pressure.

Valve size and max flow:
HMP = Cetop 03, size 06, max flow 35 l/min
HM = Cetop 03, size 06, max flow 60 l/min
KM = Cetop 05, size 10, max flow 120 l/min

Ordering Chart

Part No.	Symbol	Description	Max. flow (lpm)	Max. pressure (bar)
HMP-011/210	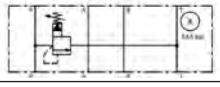	CETOP 3 RELIEF P TO T 10 - 210 BAR ADJ.	35	350
HMP-012/210	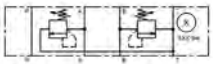	CETOP 3 RELIEF A & B TO T 10 - 210 BAR ADJ.	35	350
HMP-013/210	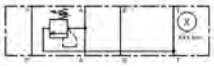	CETOP 3 RELIEF A TO T 10 - 210 BAR ADJ.	35	350
HMP-014/210	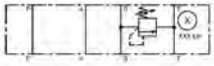	CETOP 3 RELIEF B TO T 10 - 210 BAR ADJ.	35	350
HMP-015/210	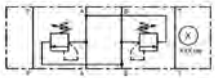	CETOP 3 RELIEF A TO B & B TO A 10 - 210 BAR ADJ.	35	350
HM-011/210	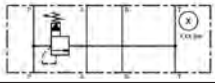	CETOP 3 RELIEF P TO T 10 - 210 BAR ADJ.	60	350
HM-012/210	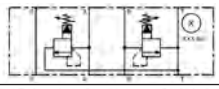	CETOP 3 RELIEF A & B TO T 10 - 210 BAR ADJ.	60	350
HM-013/210	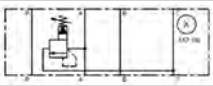	CETOP 3 RELIEF A TO T 10 - 210 BAR ADJ.	60	350
HM-014/210	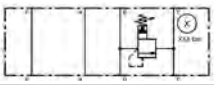	CETOP 3 RELIEF B TO T 10 - 210 BAR ADJ.	60	350
HM-015/210	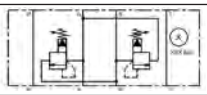	CETOP 3 RELIEF A TO B & B TO A 10 - 210 BAR ADJ.	60	350
KM-011/210	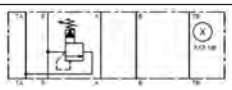	CETOP 5 RELIEF P TO T 10 - 210 BAR ADJ.	120	350
KM-012/210	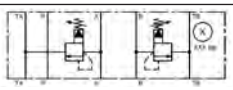	CETOP 5 RELIEF A & B TO T 10 - 210 BAR ADJ.	120	350
KM-013/210	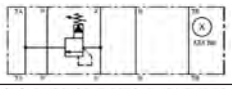	CETOP 5 RELIEF A TO T 10 - 210 BAR ADJ.	120	350
KM-014/210	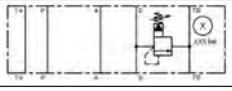	CETOP 5 RELIEF B TO T 10 - 210 BAR ADJ.	120	350
KM-015/210	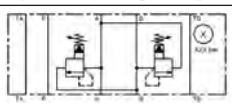	CETOP 5 RELIEF A TO B & B TO A 10 - 210 BAR ADJ.	120	350

Available Pressure range (bar)

HMP
50 = 2 - 50 BAR
100 = 3 - 100 BAR
210 = 10 - 210 BAR
350 = 15 - 350 BAR

HM
50 = 4 - 50 BAR
100 = 5 - 100 BAR
210 = 5 - 210 BAR
350 = 5 - 350 BAR

KM
50 = 4 - 50 BAR
100 = 5 - 100 BAR
210 = 5 - 210 BAR
350 = 5 - 350 BAR

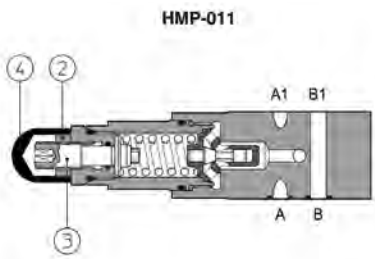

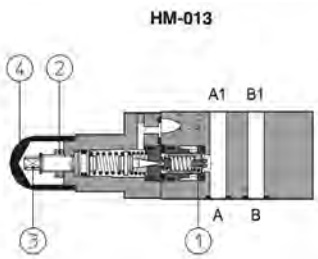

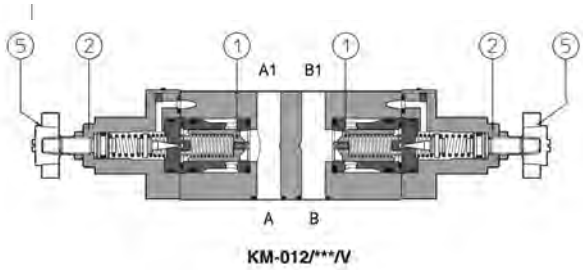

MAIN CHARACTERISTICS, SEALS and HYDRAULIC FLUIDS - for other fluids not included in below table, consult our technical office

Assembly position / location	Any position		
Subplate surface finishing	Roughness index Ra 0,4 - flatness ratio 0,01/100 (ISO 1101)		
MTTFd values according to EN ISO 13849	150 years, for further details see technical table P007		
Ambient temperature	Standard execution = -30°C ÷ +70°C /PE option = -20°C ÷ +70°C /BT option = -40°C ÷ +70°C		
Seals, recommended fluid temperature	NBR seals (standard) = -20°C ÷ +60°C, with HFC hydraulic fluids = -20°C ÷ +50°C FKM seals (/PE option)= -20°C ÷ +80°C HNBR seals (/BT option)= -40°C ÷ +60°C, with HFC hydraulic fluids = -40°C ÷ +50°C		
Recommended viscosity	15÷100 mm²/s - max allowed range 2.8 ÷ 500 mm²/s		
Fluid contamination class	ISO 4406 class 21/19/16 NAS 1638 class 10, in line filters of 25 μm (β25 ≥75 recommended)		
Hydraulic fluid	**Suitable seals type**	**Classification**	**Ref. Standard**
Mineral oils	NBR, FKM, HNBR	HL, HLP, HLPD, HVLP, HVLPD	DIN 51524
Flame resistant without water	FKM	HFDU, HFDR	ISO 12922
Flame resistant with water	NBR, HNBR	HFC	

REGULATED PRESSURE VERSUS FLOW DIAGRAMS (Based on mineral oil ISO VG 46 at 50°C)

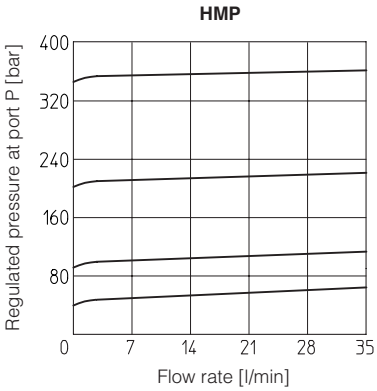

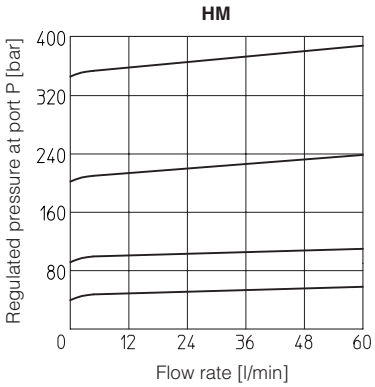

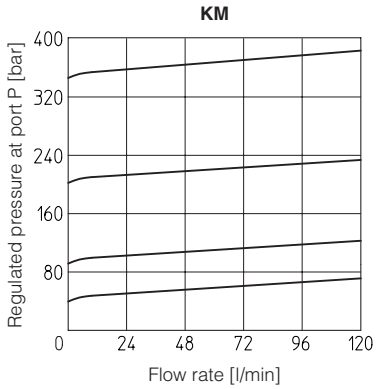

MINIMUM PRESSURE VERSUS FLOW DIAGRAMS (Based on fluid viscosity of 25 mm²/s at 40°C)

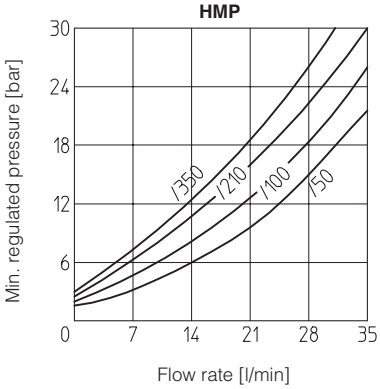

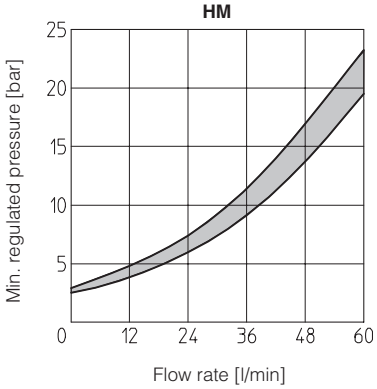

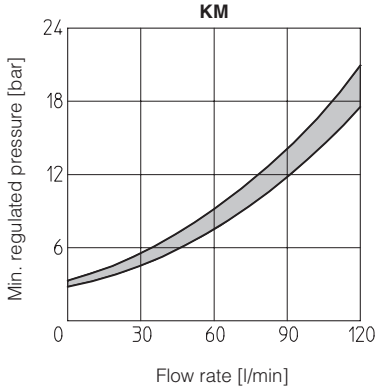

ATOS PRESSURE REDUCING MODULE CETOP 03 & 05

HG and KG are pressure reducing valves, spool type (3), designed to operate in oil hydraulic systems.
HG are direct, three way valves;
KG are double stage (1)(2), two way valves.
Clockwise rotation increases the pressure.
Valve size and max flow:
HG = size 06 flow up to 50 l/min
KG = size 10 flow up to 100 l/min
Max Pressure HG = 350 bar & KG = 315 bar
Max pressure on Port T = 160 bar

Mounting surface: ISO 4401 CETOP 03 & 05

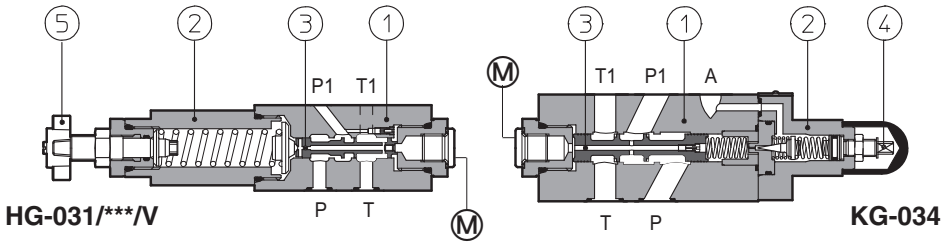

Ordering Chart

Part No.	Description	Pressure range (bar)	Max. flow (lpm)	Max. pressure (bar)
HG-031/32	CETOP 3 PRESSURE REDUCING MOD P PORT 3-32 BAR	3 - 32	50	350
HG-031/50	CETOP 3 PRESSURE REDUCING MOD P PORT 2-50 BAR	2 - 50	50	350
HG-031/100	CETOP 3 PRESSURE REDUCING MOD P PORT 20-100 BAR	20-100	50	350
HG-031/210	CETOP 3 PRESSURE REDUCING MOD P PORT 50-210 BAR	50 - 210	50	350
HG-033/32	CETOP 3 PRESSURE REDUCING MOD A PORT 3-32 BAR	3 - 32	50	350
HG-033/50	CETOP 3 PRESSURE REDUCING MOD A PORT 2-50 BAR	2 - 50	50	350
HG-033/100	CETOP 3 PRESSURE REDUCING MOD A PORT 20-100 BAR	20-100	50	350
HG-033/210	CETOP 3 PRESSURE REDUCING MOD A PORT 50-210 BAR	50 - 210	50	350
HG-034/32	CETOP 3 PRESSURE REDUCING MOD B PORT 3-32 BAR	3 - 32	50	350
HG-034/50	CETOP 3 PRESSURE REDUCING MOD B PORT 2-50 BAR	2 - 50	50	350
HG-034/100	CETOP 3 PRESSURE REDUCING MOD B PORT 20-100 BAR	20-100	50	350
HG-034/210	CETOP 3 PRESSURE REDUCING MOD B PORT 50-210 BAR	50 - 210	50	350
KG-031/100	CETOP 5 PRESSURE REDUCING MOD P PORT 2-50 BAR	2 - 50	100	315
KG-031/210	CETOP 5 PRESSURE REDUCING MOD P PORT 50-210 BAR	50 - 210	100	315
KG-033/100	CETOP 5 PRESSURE REDUCING MOD A PORT 2-50 BAR	2 - 50	100	315
KG-033/210	CETOP 5 PRESSURE REDUCING MOD A PORT 50-210 BAR	50 - 210	100	315
KG-034/100	CETOP 5 PRESSURE REDUCING MOD B PORT 2-50 BAR	2 - 50	100	315
KG-034/210	CETOP 5 PRESSURE REDUCING MOD B PORT 50-210 BAR	50 - 210	100	315

Note: Various setting adjustment options are available – please call the sales desk for information

Hydraulic configuration

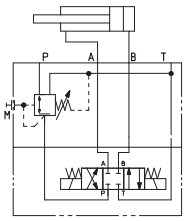

HG-031

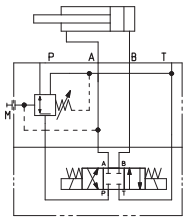

HG-033

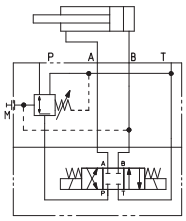

HG-034

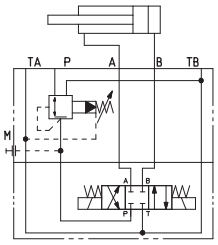

KG-031

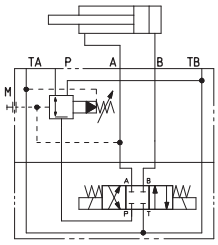

KG-033

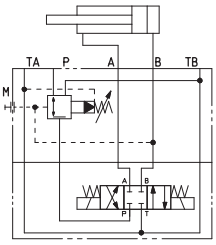

J

KG-034

3 MAIN CHARACTERISTICS, SEALS and HYDRAULIC FLUID - for other fluids not included in below table, consult our technical office

Assembly position / location	Any position		
Subplate surface finishing	Roughness index Ra 0,4 - flatness ratio 0,01/100 (ISO 1101)		
Compliance	RoHS Directive 2011/65/EU as last update by 2015/863/EU REACH Regulation (EC) n°1907/2006		
Ambient temperature	**Standard** = -30°C ÷ +80°C **/PE** option = -20°C ÷ +70°C **/BT** option = -40°C ÷ +70°C		
Seals, recommended fluid temperature	NBR seals (standard) = -20°C ÷ +60°C, with HFC hydraulic fluids = -20°C ÷ +50°C FKM seals (/PE option)= -20°C ÷ +80°C HNBR seals (/BT option)= -40°C ÷ +60°C, with HFC hydraulic fluids = -40°C ÷ +50°C		
Recommended viscosity	15÷100 mm²/s - max allowed range 2.8 ÷ 500 mm²/s		
Max fluid contamination level	ISO4406 class 20/18/15 NAS1638 class 9, see also filter section at www.atos.com or KTF catalog		
Hydraulic fluid	**Suitable seals type**	**Classification**	**Ref. Standard**
Mineral oils	NBR, FKM, HNBR	HL, HLP, HLPD, HVLP, HVLPD	DIN 51524
Flame resistant without water	FKM	HFDU, HFDR	ISO 12922
Flame resistant with water	NBR, HNBR	HFC	

4 DIAGRAMS OF HG-03*

based on mineral oil ISO VG 46 at 50°C

1 = regulated pressure variation versus flow:
- between use port and discharge port
- between inlet port and use port

2 = differential pressure variation versus flow between inlet port and use port

3 = differential pressure variation versus flow between use port and discharge port

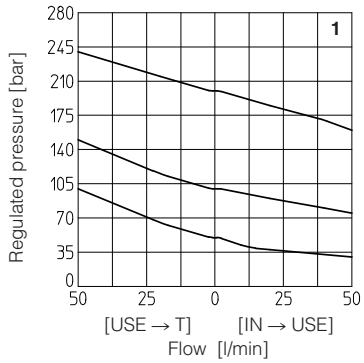

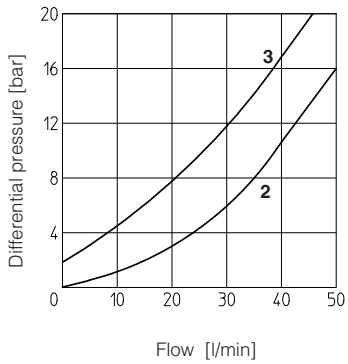

5 DIAGRAMS OF KG-03*

based on mineral oil ISO VG 46 at 50°C

1 = regulated pressure variation versus flow:
- between use port and discharge port
- between inlet port and use port

2 = differential pressure variation versus flow between inlet port and use port

3 = differential pressure variation versus flow between use port and discharge port

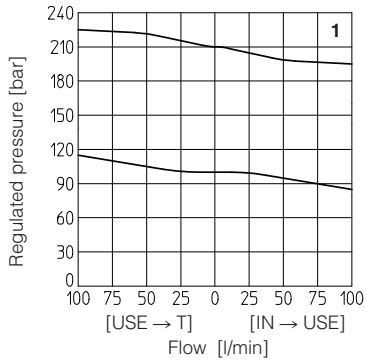

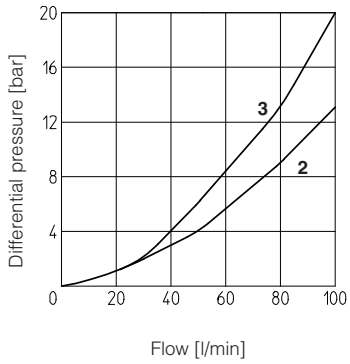

ATOS FLOW CONTROL SANDWICH MODULE CETOP 03 & 05

HQ, KQ are flow throttling valves, not compensated, and with check valves to allow free flow in the opposite direction. The flow adjustment is done by turning the setting screw in the normal model. Optional versions with graduate micro-meter knob are available on request. Clockwise rotation increases the throttling (passage reduced).

Note:
Please carefully check meter characteristics when ordering

Ordering Chart

Part No.	Symbol	Description	Max. flow (lpm)	Max. pressure (bar)
HQ-012	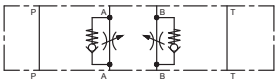	CETOP 3 DUAL FLOW CONTROL MODULE A & B METER OUT	50	350
HQ-013	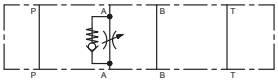	CETOP 3 FLOW CONTROL MODULE A PORT METER OUT	50	350
HQ-014	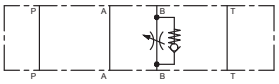	CETOP 3 FLOW CONTROL MODULE B PORT METER OUT	50	350
HQ-022	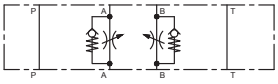	CETOP 3 DUAL FLOW CONTROL MODULE A & B METER IN	50	350
HQ-023	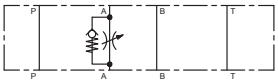	CETOP 3 FLOW CONTROL MODULE A PORT METER IN	50	350
HQ-024	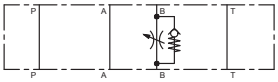	CETOP 3 FLOW CONTROL MODULE B PORT METER IN	50	350
KQ-012	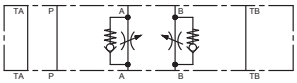	CETOP 5 DUAL FLOW CONTROL MODULE A & B METER OUT	100	315
KQ-013	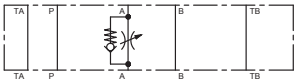	CETOP 5 FLOW CONTROL MODULE A PORT METER OUT	100	315
KQ-014	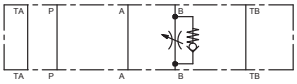	CETOP 5 FLOW CONTROL MODULE B PORT METER OUT	100	315
KQ-022	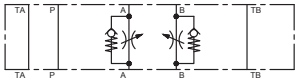	CETOP 5 DUAL FLOW CONTROL MODULE A & B METER IN	100	315
KQ-023	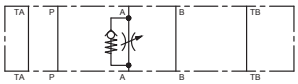	CETOP 5 FLOW CONTROL MODULE A PORT METER IN	100	315
KQ-024	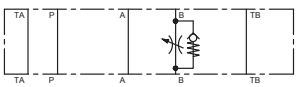	CETOP 5 FLOW CONTROL MODULE B PORT METER IN	100	315

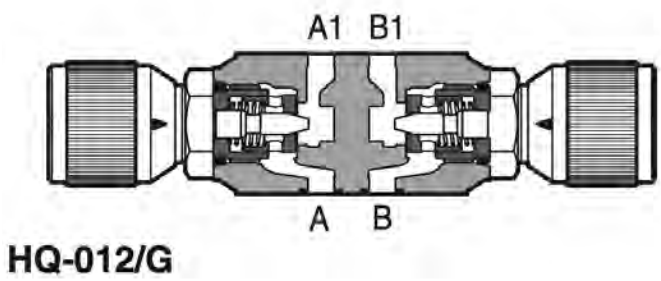

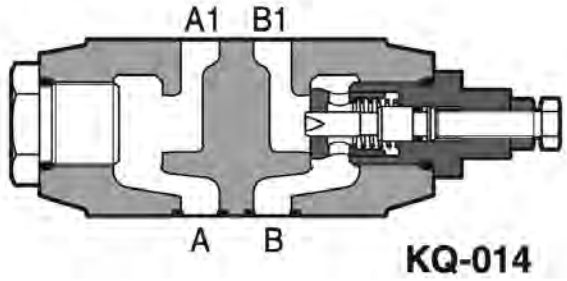

MAIN CHARACTERISTICS, SEALS and HYDRAULIC FLUID - for other fluids not included in below table, consult our technical office

Assembly position / location	Any position		
Subplate surface finishing	Roughness index Ra 0,4 - flatness ratio 0,01/100 (ISO 1101)		
MTTFd values according to EN ISO 13849	150 years, for further details see technical table P007		
Ambient temperature	Standard execution = -30°C ÷ +70°C /PE option = -20°C ÷ +70°C /BT option = -40°C ÷ +70°C		
Seals, recommended fluid temperature	NBR seals (standard) = -20°C ÷ +60°C, with HFC hydraulic fluids = -20°C ÷ +50°C FKM seals (/PE option)= -20°C ÷ +80°C HNBR seals (/BT option)= -40°C ÷ +60°C, with HFC hydraulic fluids = -40°C ÷ +50°C		
Recommended viscosity	15÷100 mm²/s - max allowed range 2.8 ÷ 500 mm²/s		
Fluid contamination class	ISO 4406 class 21/19/16 NAS 1638 class 10, in line filters of 25 μm (β25 ≥75 recommended)		
Hydraulic fluid	**Suitable seals type**	**Classification**	**Ref. Standard**
Mineral oils	NBR, FKM, HNBR	HL, HLP, HLPD, HVLP, HVLPD	DIN 51524
Flame resistant without water	FKM	HFDU, HFDR	ISO 12922
Flame resistant with water	NBR, HNBR	HFC	

DIAGRAMS OF HQ-0 based on mineral oil ISO VG 46 at 50°C

1 = Regulation diagram at Δp 10 bar (1.1 = option /U)
2 = Regulation diagram at Δp 30 bar (2.1 = option /U)
3 = Regulation diagram at Δp 50 bar (3.1 = option /U)
4 = Q/Δp diagram for free flow through the non-return valve

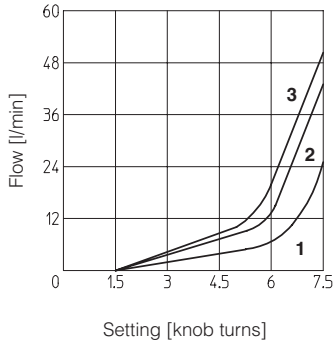

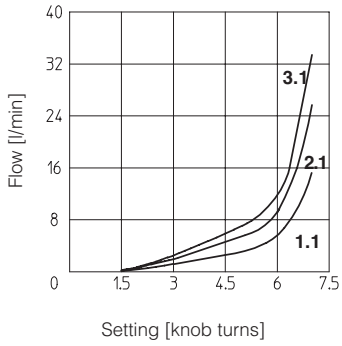

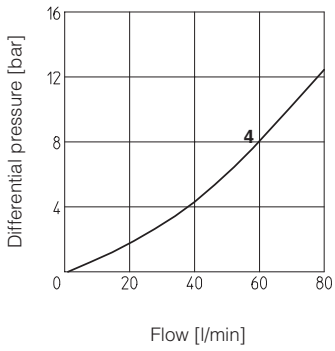

DIAGRAMS OF KQ-0 based on mineral oil ISO VG 46 at 50°C

1 = Regulation diagram at Δp 10 bar
2 = Regulation diagram at Δp 30 bar
3 = Regulation diagram at Δp 50 bar
4 = Q/Δp diagram for free flow through the non-return valve

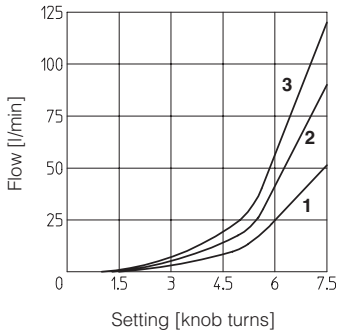

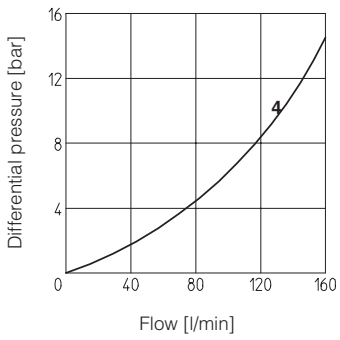

ATOS CHECK VALVE SANDWICH MODULE CETOP 03 & 05

HR and KR are models of check valves and are available as either direct or pilot operation.

Ordering Chart

Part No.	Symbol	Description	Max. flow (lpm)	Max. pressure (bar)
HR-002	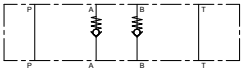	CETOP 3 CHECK VALVE MODULE A & B PORT	50	350
HR-003	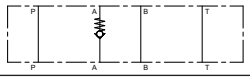	CETOP 3 CHECK VALVE MODULE A PORT	50	350
HR-004	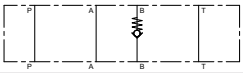	CETOP 3 CHECK VALVE MODULE B PORT	50	350
HR-011	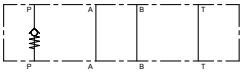	CETOP 3 CHECK VALVE MODULE P PORT	50	350
HR-016	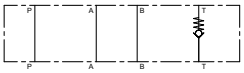	CETOP 3 CHECK VALVE MODULE T PORT	50	350
HR-012	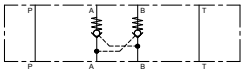	CETOP 3 DUAL PO CHECK VALVE MODULE A & B PORT	50	350
HR-013	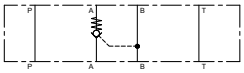	CETOP 3 PO CHECK VALVE MODULE A PORT	50	350
HR-014	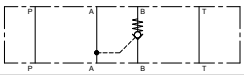	CETOP 3 PO CHECK VALVE MODULE B PORT	50	350
KR-002	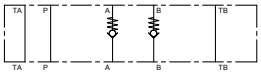	CETOP 5 CHECK VALVE MODULE A & B PORT	100	315
KR-003	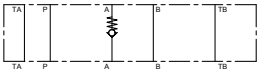	CETOP 5 CHECK VALVE MODULE A PORT	100	315
KR-004	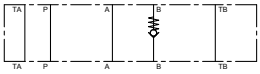	CETOP 5 CHECK VALVE MODULE B PORT	100	315
KR-011	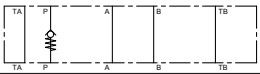	CETOP 5 CHECK VALVE MODULE P PORT	100	315
KR-016	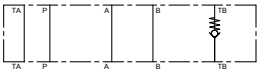	CETOP 5 CHECK VALVE MODULE T PORT	100	315
KR-012	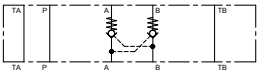	CETOP 5 DUAL PO CHECK VALVE MODULE A & B PORT	100	315
KR-013	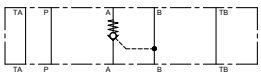	CETOP 5 PO CHECK VALVE MODULE A PORT	100	315
KR-014	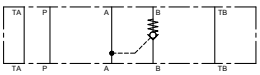	CETOP 5 PO CHECK VALVE MODULE B PORT	100	315

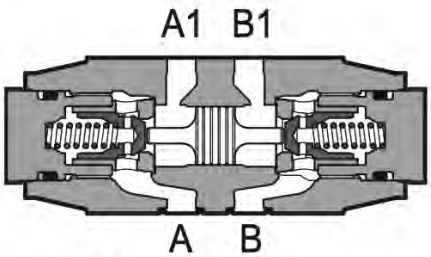

HR-012

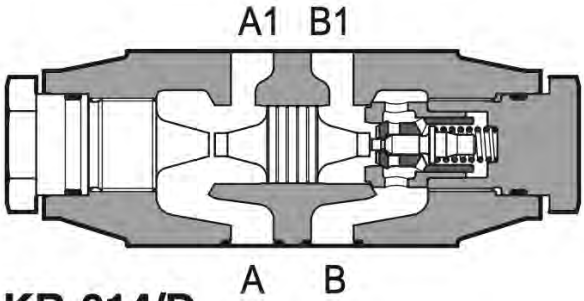

KR-014/D

MAIN CHARACTERISTICS, SEALS and HYDRAULIC FLUID - for other fluids not included in below table, consult our technical office

Assembly position / location	Any position		
Subplate surface finishing	Roughness index Ra 0,4 - flatness ratio 0,01/100 (ISO 1101)		
MTTFd values according to EN ISO 13849	150 years, for further details see technical table P007		
Ambient temperature	Standard execution = -30°C ÷ +70°C /PE option = -20°C ÷ +70°C /BT option = -40°C ÷ +70°C		
Seals, recommended fluid temperature	NBR seals (standard) = -20°C ÷ +60°C, with HFC hydraulic fluids = -20°C ÷ +50°C FKM seals (/PE option)= -20°C ÷ +80°C HNBR seals (/BT option)= -40°C ÷ +60°C, with HFC hydraulic fluids = -40°C ÷ +50°C		
Recommended viscosity	15÷100 mm²/s - max allowed range 2.8 ÷ 500 mm²/s		
Fluid contamination class	ISO 4406 class 21/19/16 NAS 1638 class 10, in line filters of 25 µm (β25 ≥75 recommended)		
Hydraulic fluid	**Suitable seals type**	**Classification**	**Ref. Standard**
Mineral oils	NBR, FKM, HNBR	HL, HLP, HLPD, HVLP, HVLPD	DIN 51524
Flame resistant without water	FKM	HFDU, HFDR	ISO 12922
Flame resistant with water	NBR, HNBR	HFC	

DIAGRAMS OF HR-0 based on mineral oil ISO VG 46 at 50°C

Flow through check valve:

1 = A→A1; B→B1 of HR-012, HR-013, HR-014

2 = A1→A; B1→B of HR-012, HR-013, HR-014

3 = HR-011, HR-016

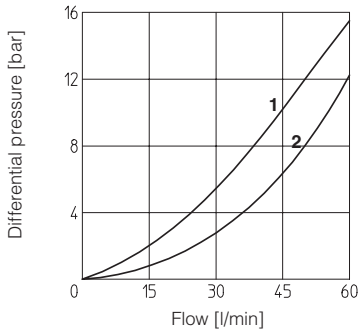

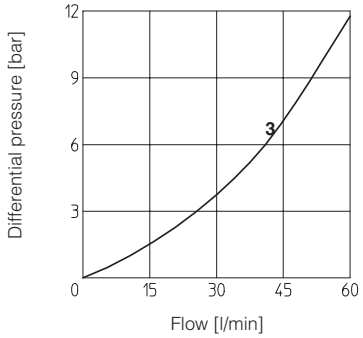

DIAGRAMS OF KR-0 based on mineral oil ISO VG 46 at 50°C

Flow through check valve:

1 = A→A1; B→B1 of KR-012, KR-013, KR-014

2 = A1→A; B1→B of KR-012, KR-013, KR-014

3 = KR-011, KR-016

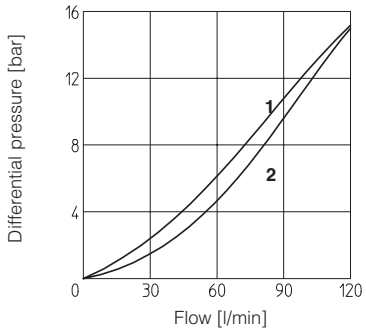

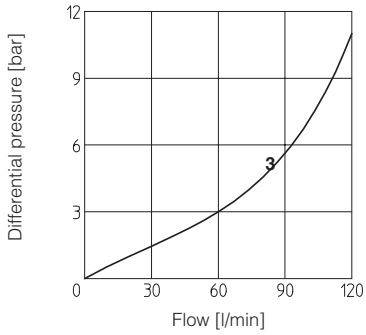

Note: Optional versions with decompression are available on request for some models of KR.

DUAL OVERCENTRE VALVE SANDWICH MODULE, CETOP 03

Operation

Housed as a Cetop 3 module, these assemblies can be used in applications where space is at a premium or as an easy retrofit to improve the level of control in motor or cylinder circuits. As well as being able to offer load holding and thermal relief protection these controls are able to meter loads in both directions, preventing a run-away situation.

Features

- Easily installed.
- Includes Cetop O ring interface seals

Symbol

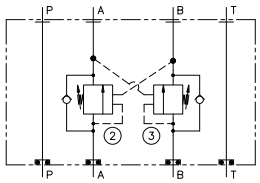

Performance

26 cSc / 42°C.

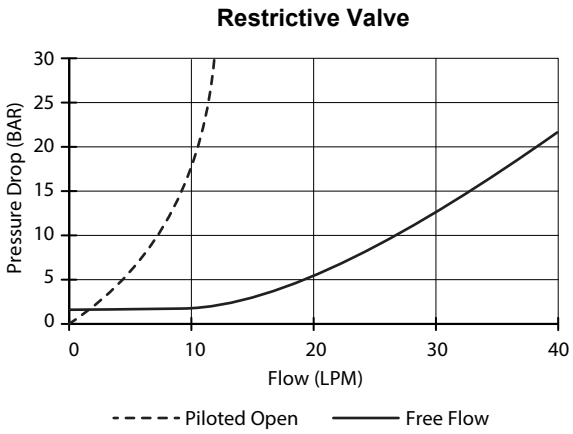

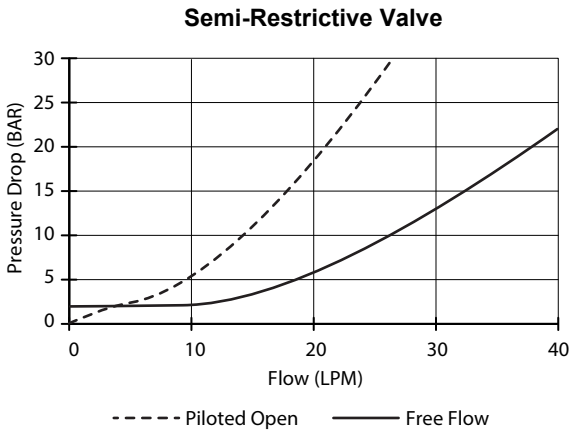

Specifications

Max. pressure (bar)	240
Nom. flow (lpm)	40
Operating temp.	-20˚C to +50˚C
Fluid temp.	-20˚C to +80˚C
Viscosity range	6 to 420 Cst
Pilot ratio	3:1
Crack pressure	3.5 bar
Filtration	ISO 19/17/14
Hydraulic oil	General Purpose Hydraulic Fluid
Seals	Nitrile (std)

Dimensions

[mm]

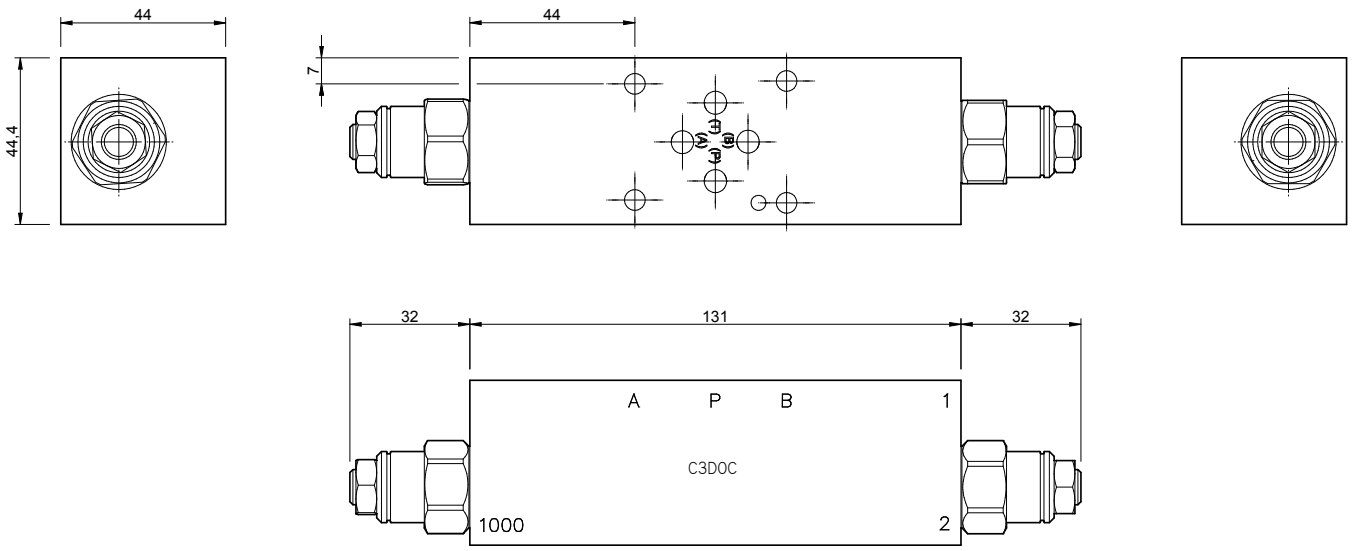

Interface: ISO 4401:2005

Ordering Chart

Part No.	Description	Max. flow (lpm)	Max. pressure (bar)
C3-DOCSNH00B1500A	CETOP 3 DUAL O/CENTRE RESTRICTIVE 0-103 BAR	15	240
C3-DOCSNH00B4000A	CETOP 3 DUAL O/CENTRE RESTRICTIVE 0-280 BAR		
C3-DOCSNH00C1500A	CETOP 3 DUAL O/CENTRE SEMI RESTRICTIVE. 0-103 BAR	40	
C3-DOCSNH00C4000A	CETOP 3 DUAL O/CENTRE SEMI RESTRICTIVE. 0-280 BAR		

ATOS PRESSURE COMPENSATOR MODULE CETOP 03 & 05

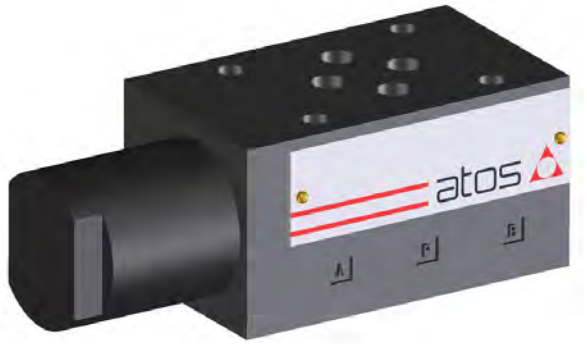

HC and KC are two way pressure compensators for modular assembling on/off and proportional directional control valves.

They keep a constant differential pressure across port P and port A or B in order to maintain a constant flow rate against pressure variations. Automatic piloting (6) is included.

Adjustment of desired pressure is operated by loosening the locking nut (4) and turning the setting screw (5) of pilot device.
Clockwise rotation increases pressure.
HC = Size 06, flow up to 50 l/min
KC = size 10, flow up to 100 l/min

Mounting surface: ISO 4401 Size 06 and 10
Max pressure 350 bar

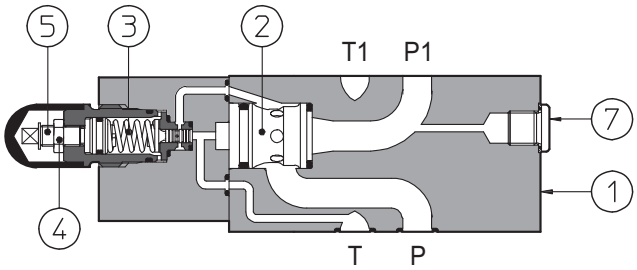

HC-011/8, HC-011/30

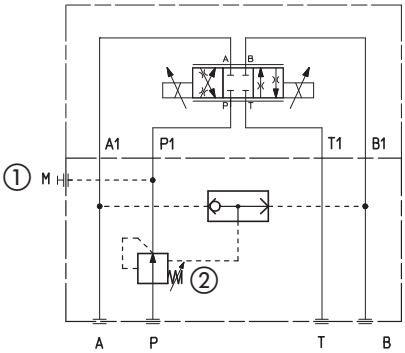

KC-011/30

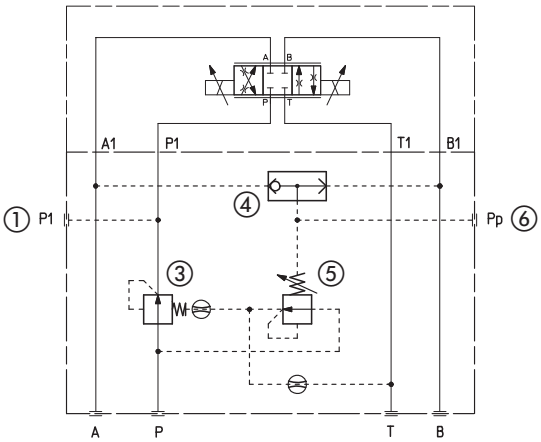

1 Pressure gauge port
2 Settable
3 Two way compensator
4 Piloting selection
5 Adjustment of pressure on pilot device
6 Pilot port

3 MAIN CHARACTERISTICS, SEALS and HYDRAULIC FLUID - for other fluids not included in below table, consult our technical office

Assembly position / location	Any position		
Subplate surface finishing	Roughness index Ra 0,4 - flatness ratio 0,01/100 (ISO 1101)		
Compliance	RoHS Directive 2011/65/EU as last update by 2015/863/EU REACH Regulation (EC) n°1907/2006		
Ambient temperature	**Standard** = -30°C ÷ +80°C **/PE** option = -20°C ÷ +70°C **/BT** option = -40°C ÷ +70°C		
Seals, recommended fluid temperature	NBR seals (standard) = -20°C ÷ +60°C, with HFC hydraulic fluids = -20°C ÷ +50°C FKM seals (/PE option)= -20°C ÷ +80°C HNBR seals (/BT option)= -40°C ÷ +60°C, with HFC hydraulic fluids = -40°C ÷ +50°C		
Recommended viscosity	15÷100 mm²/s - max allowed range 2.8 ÷ 500 mm²/s		
Max fluid contamination level	ISO4406 class 20/18/15 NAS1638 class 9, see also filter section at www.atos.com or KTF catalog		
Hydraulic fluid	**Suitable seals type**	**Classification**	**Ref. Standard**
Mineral oils	NBR, FKM, HNBR	HL, HLP, HLPD, HVLP, HVLPD	DIN 51524
Flame resistant without water	FKM	HFDU, HFDR	ISO 12922
Flame resistant with water	NBR, HNBR	HFC	

Ordering Chart

Part No.	Description	Regulating Pressure (bar)	Max flow (l/min)	Max inlet pressure (bar)
HC-011/30	CETOP 3 PRESSURE COMPENSATOR MODULE	5-35	50	350
KC-011/30	CETOP 5 PRESSURE COMPENSATOR MODULE		100	

CETOP BOLTS

- High tensile cap head screws.
- M5 for CETOP 03 Solenoid valves and ATOS sandwich modules.
- M6 for CETOP 05 Solenoid valves and ATOS sandwich modules.

Ordering Chart

Part No.	Description	Length (mm)
M5 X 30 SHCS BZP	ATOS CETOP 3 CAP HEAD BOLT M5 X 30 DCV	30
M5 X 70 SHCS BZP	ATOS CETOP 3 CAP HEAD BOLT M5 X 70 DCV +1 MODULE	70
M5 X 110 SHCS BZP	ATOS CETOP 3 CAP HEAD BOLT M5 X 110 DCV +2 MODULE	110
M5 X 150 SCHS BZP	ATOS CETOP 3 CAP HEAD BOLT M5 X 150 DCV +3 MODULE	150
M6 X 40 SHCS BZP	ATOS CETOP 5 CAP HEAD BOLT M6 X 40 DCV	40
M6 X 90 SHCS BZP	ATOS CETOP 5 CAP HEAD BOLT M6 X 90 DCV +1 MODULE	90
M6 X 140 SHCS BZP	ATOS CETOP 5 CAP HEAD BOLT M6 X 140 DCV +2 MODULE	140

DIN 43650 AND HIRSCHMANN CONNECTORS

Ordering Chart

Part No.	Description
SP-666	BLACK HIRSCHMAN CONNECTOR PG9
SP-666/A	GREY HIRSCHMAN CONNECTOR PG9
SP-667-110	CONNECTOR + 110V LED IND PG9
SP-667-220	CONNECTOR + 230V LED IND PG11
SP-667-24	CONNECTOR+ 12/24V LED IND PG9
SP-669	CONNECTOR + RECTIFIER

Hydrastore
Hydraulic Systems & Components

ATOS PROPORTIONAL DIRECTIONAL VALVE, CETOP 03

Digital proportional valves without transducer and positive over lapped spool, used for open loop directional control.

This valve requires off board PWM driver.
Coil protection IP65

Ordering Chart

Part No.	Symbol	Description	Max. flow (lpm)	Max. pressure (bar)
DHZE-A-071-L1	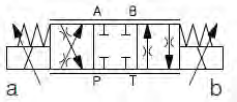	CETOP 3 PROPORTIONAL VALVE + LINEAR SPOOL	8	350
DHZE-A-071-L3	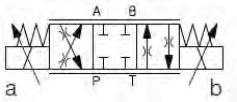	CETOP 3 PROPORTIONAL VALVE + LINEAR SPOOL	30	350
DHZE-A-071-L5	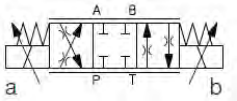	CETOP 3 PROPORTIONAL VALVE + LINEAR SPOOL	50	350
DHZE-A-071-S3	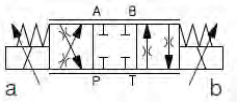	CETOP 3 PROPORTIONAL VALVE + PROGRESSIVE SPOOL	30	350
DHZE-A-071-S5	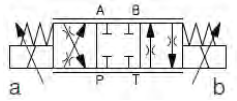	CETOP 3 PROPORTIONAL VALVE + PROGRESSIVE SPOOL	50	350
DHZE-A-073-L1	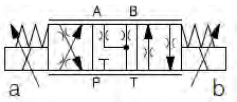	CETOP 3 PROPORTIONAL VALVE + LINEAR SPOOL	8	350
DHZE-A-073-L3	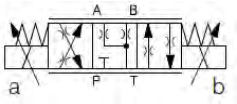	CETOP 3 PROPORTIONAL VALVE + LINEAR SPOOL	30	350
DHZE-A-073-L5	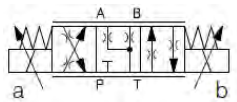	CETOP 3 PROPORTIONAL VALVE + LINEAR SPOOL	50	350
DHZE-A-073-S3	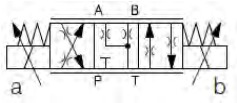	CETOP 3 PROPORTIONAL VALVE + PROGRESSIVE SPOOL	30	350
DHZE-A-073-S5	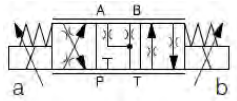	CETOP 3 PROPORTIONAL VALVE + PROGRESSIVE SPOOL	50	350

Hydraulic Characteristics

Valve model	DHZE	
Pressure limits (bar)	Ports P, A, B = 350 T= 210	
Spool type & size	S3,L3	S5, L5,
at delta p = 10 bar (P-T)	18	28
at delta p = 30 bar (P-T)	30	50
at delta p = 70 bar (P-T)	45	70
Response time (ms)	30	30
Hysteresis (%)	5 (% of max regulation)	
Repeatability (%)	1 (% of max regulation)	

Electrical Characteristics

Max power consumption	30 W	
Coil voltage code	standard 12V	option /18v
Max. solenoid current	2.2 A	1A
Coil resistance R at 20 Deg C	3 / 3.3	13 / 13.4
Insulation class	H (180) Due to the ocurring surface temperatures of the solenoid coils the European standards ISO 13732-1 and EN982 must be taken into account	
Protection degree to DIN EN60529	IP65 with mating connections	
Dutty factor	Continuous rating (ED=100%)	
Certification	cURus North American Standard	

Spool regulation characteristics :
L= Linear
S= Progressive

Valve body characteristics:
chambers type for DHZE 3

DHZE:
Size: 06- iso 4401
Max flow: 70 l/min
Max pressure: 350 bar

The solenoids are certified according to North America standards cURus.

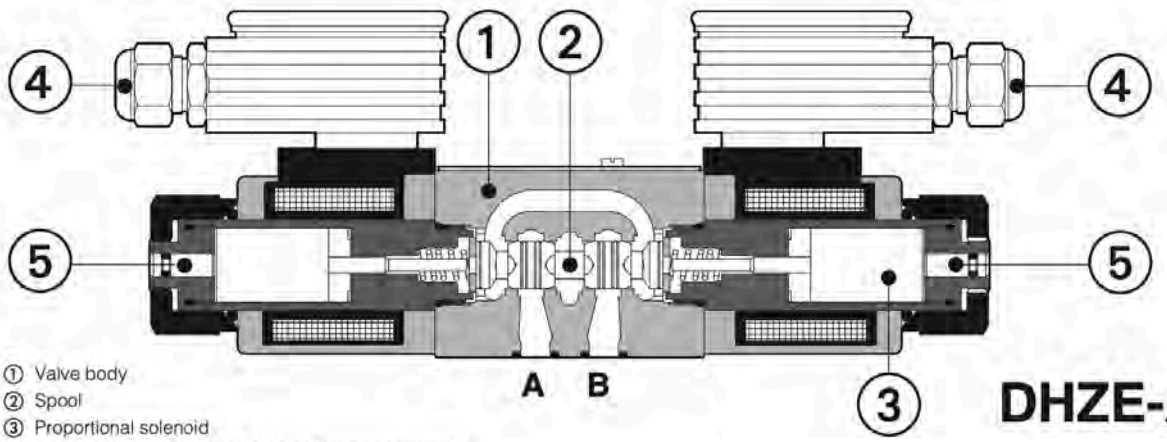

① Valve body
② Spool
③ Proportional solenoid
④ E-MI-AS-IR digital driver (to be ordered separately)
⑤ Manual override

DHZE-A-07*

Note: Excludes driver - see page 42 or contact our sales department

Note: Flow rates specified in ordering chart are at 30 bar delta P.

Note: Cetop 05 type DKZE available on request as not a stocked item.

ATOS PROPORTIONAL RELIEF VALVE RZME – DIRECT ACTING CETOP 03

Proportional pressure relief valve, direct acting poppet type, for open loop pressure control.
The valve operates in conjunction with a separately mounted driver, supplying a current controlled PWM output to the proportional coil. Controlling valve regulation in accordance to the external input reference signal.

RZME is subplate mounted.
Cetop 03
(ISO size 06)

Max flow: 4 l/min

ATOS digital proportional valves are CE marked according to the applicable directives see full datasheet.

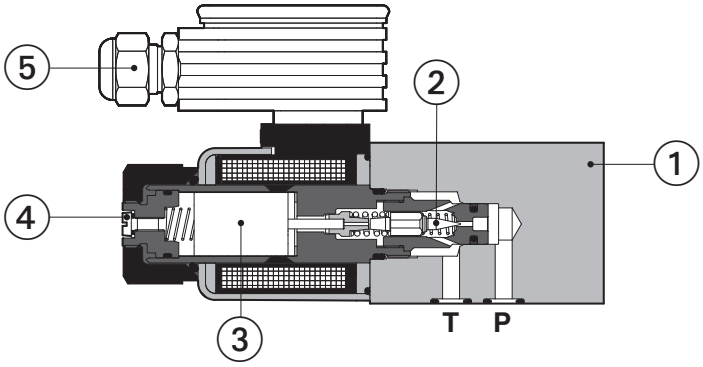

① Valve body
② Poppet
③ Proportional solenoid
④ Screw for air bleeding
⑤ E-MI-AS-IR digital driver (to be ordered separately)

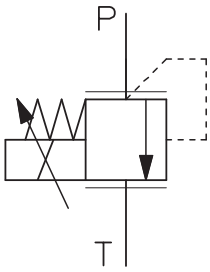

GENERAL CHARACTERISTICS

Assembly position	Any position		
Subplate surface finishing to ISO 4401	Acceptable roughness index: Ra ≤ 0,8, recommended Ra 0,4 – Flatness ratio 0,01/100		
MTTFd valves according to EN ISO 13849	150 years, see technical table P007		
Ambient temperature range	**Standard** = -20°C ÷ +70°C	**/PE** option = -20°C ÷ +70°C	**/BT** option = -40°C ÷ +60°C
Storage temperature range	**Standard** = -20°C ÷ +80°C	**/PE** option = -20°C ÷ +80°C	**/BT** option = -40°C ÷ +70°C
Surface protection	Zinc coating with black passivation		
Corrosion resistance	Salt spray test (EN ISO 9227) > 200 h		
Conformity	CE according to EMC directive 2014/30/EU (Immunity: EN 61000-6-2; Emission: EN 61000-6-3) RoHS Directive 2011/65/EU as last update by 2015/863/EU REACH Regulation (EC) n°1907/2006		

HYDRAULIC CHARACTERISTICS

Valve model	RZME-A-010
Max regulated pressure	50; 100; 210; 315; 350;
Min. regulated pressure [bar]	see min. pressure / flow diagrams at section 9
Max. pressure at port P [bar]	350
Max. pressure at port T [bar]	210
Max. flow [l/min]	4
Response time 0-100% step signal **(1)** [ms] (depending on installation)	≤ 70
Hysteresis [% of the max pressure]	≤ 1,5
Linearity [% of the max pressure]	≤ 3
Repeatability [% of the max pressure]	≤ 2

Note: above performance data refer to valves coupled with Atos electronic drivers, see section 3

(1) Average response time values; the pressure variation in consequence of a modification of the reference input signal to the valve is affected by the stiffness of the hydraulic circuit: greater is the stiffness of the circuit, faster is the dynamic response

ELECTRICAL CHARACTERISTICS

Coil voltage code	**Standard** standard coil to be used with Atos drivers with power supply 24V DC
Max. solenoid current	2,5 A
Coil resistance R at 20°C	3,1 Ω
Insulation class	H (180°) Due to the occurring surface temperatures of the solenoid coils, the European standards ISO 13732-1 and EN982 must be taken into account
Protection degree to DIN EN60529	**IP 65** (with connectors 666 correctly assembled)
Duty factor	Continuous rating (ED=100%)
Certification	**cURus** North American Standards

Min. pressure/flow diagrams
with zero reference signal

4 = pressure range: 100
5 = pressure range: 210

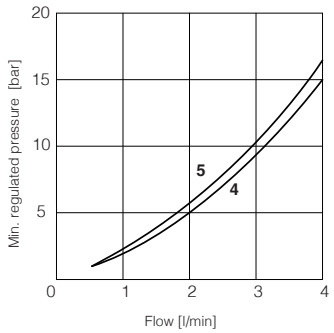

SOLENOID CONNECTION

PIN	SIGNAL	TECHNICAL SPECIFICATION
1	**COIL**	Power supply
2	**COIL**	Power supply
3	**GND**	Ground

Connector code 666

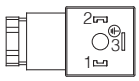

Ordering Chart

Part No.	Description	Pressure range (bar)
RZME-A-010-100	PROPORTIONAL PRESSURE RELIEF VALVE MAX 100 BAR	100
RZME-A-010-210	PROPORTIONAL PRESSURE RELIEF VALVE MAX 210 BAR	210
RZME-A-010-315	PROPORTIONAL PRESSURE RELIEF VALVE MAX 315 BAR	315

Note: Excludes driver - see page 42 or contact our sales department

ATOS E-MI-AS-IR - PLUG ON DIGITAL DRIVER FOR SINGLE SOLENOID OPERATION

These drivers are designed with DIN connector mount to plug directly on to proportional valve coils without transducers. They modulate according to an electrical reference signal and control the current provided to the solenoid resulting in the valve's hydraulic regulation. E-MI-AS drivers can drive single or double solenoid proportional valve.

Note: Safety & explosion proof variants are available to order

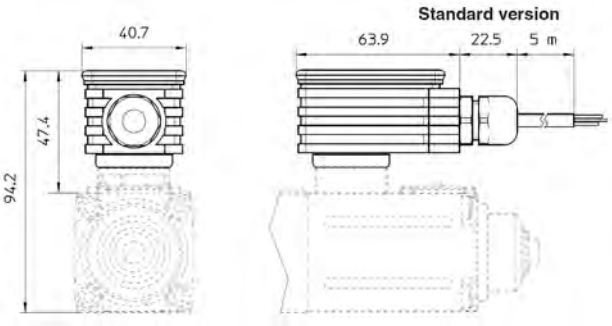

Connection

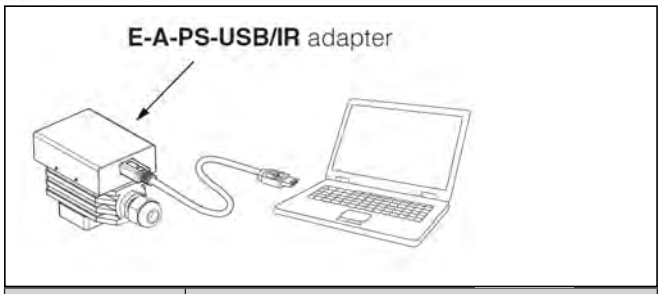

Part No.	Description
E-A-PS-USB/IR	ATOS IR PROGRAMMING ADAPTOR

Ordering Chart

Part No.	Description	Reference
E-MI-AS-IR-01H	DIGITAL DRIVER DIN 43650 PLUG FORMAT	0-10v
E-MI-AS-IR-01H/I	DIGITAL DRIVER DIN 43650 PLUG FORMAT	4-20ma
E-MI-AS-IR-01H/M12	DIGITAL PLUG ON DRIVER M12	4-20ma

ATOS PROPORTIONAL DRIVER-DIN RAIL MOUNT

Designed to be within an electrical enclosure and mounted to a DIN rail, these drivers power proportional valves without transducers. They modulate according to an electrical reference signal and control the current provided to the solenoid resulting in the valve's hydraulic regulation. E-BM-AS can drive up to two single or one double solenoid proportional valves.

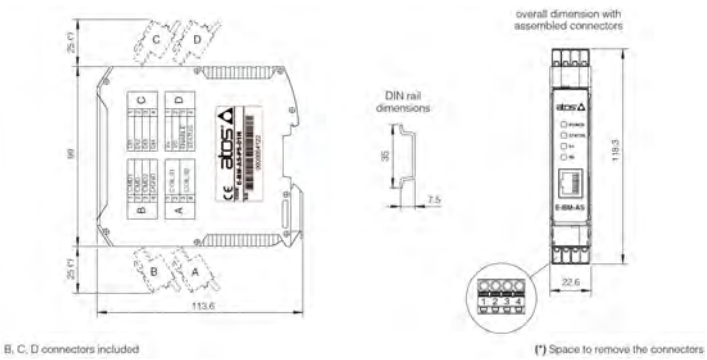

Connection

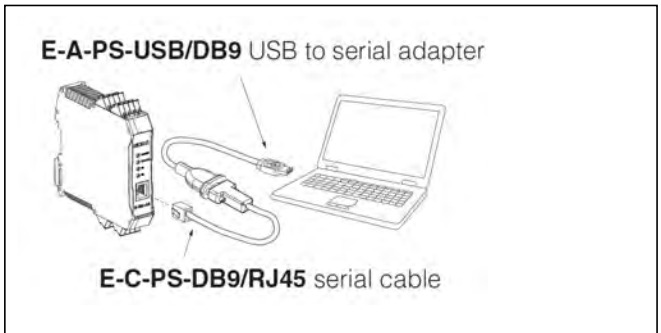

Part No.	Description
E-A-PS-USB/DB9	SERIAL COMMUNICATION ADAPTOR
E-C-PS-DB9/RJ45	PROGRAMMING CABLE

Ordering Chart

Part No.	Description	Voltage
E-BM-AS-PS-01H	DIGITAL ELECTRONIC DRIVER- SINGLE SOLENOID 24VDC	0-10v
E-BM-AS-PS-05H	DIGITAL ELECTRONIC DRIVER- DOUBLE SOLENOID 24VDC	0-10v
E-BM-AS-PS-01H/12	DIGITAL ELECTRONIC DRIVER- SINGLE SOLENOID 12VDC	0-10v
E-BM-AS-PS-05H/12	DIGITAL ELECTRONIC DRIVER- DOUBLE SOLENOID 12VDC	0-10v

Subplates & manifolds

Single station subplates

CETOP 03 SIDE ENTRY SUBPLATE 44
CETOP 05 SIDE ENTRY SUBPLATE 45
CETOP 03 SUBPLATE WITH RELIEF 46
CETOP 05 SUBPLATE WITH RELIEF 47

Multi station manifolds

CETOP 03 48
CETOP 05 49

Blanking plates

CETOP 03 50
CETOP 05 51

Relief subplate

P & T PORT ROUTING MANIFOLD C/W RELIEF 52

CETOP 03 SIDE ENTRY SUBPLATE

DESCRIPTION

A compact subplate with basic 4 port layout. Optimised internal drillings ensure that pressure drops are minimised for best system efficiency.

FEATURES

- Steel (zinc plate, clear passivate).
- Compact, efficient design.
- 350 bar max, zinc plated.

SYMBOL

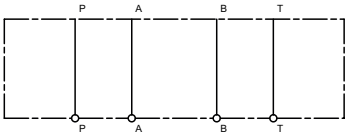

DIMENSIONS (mm)

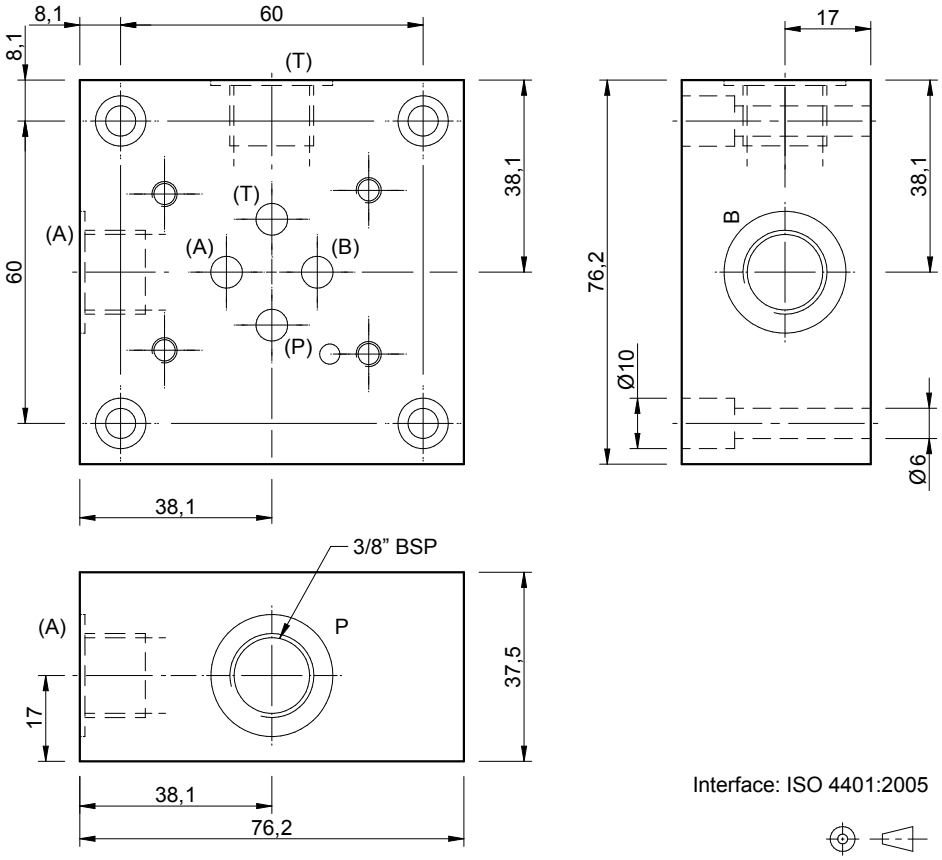

Interface: ISO 4401:2005

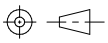

Ordering Chart

Part No.	Description	Max. pressure (bar)
RF-HSL-853-B-S	CETOP 3 SIDE ENTRY SUBPLATE 3/8 BSPP	350
RF-HSL-853-C-S	CETOP 3 SIDE ENTRY SUBPLATE 1/2 BSPP	350

CETOP 05 SIDE ENTRY SUBPLATE

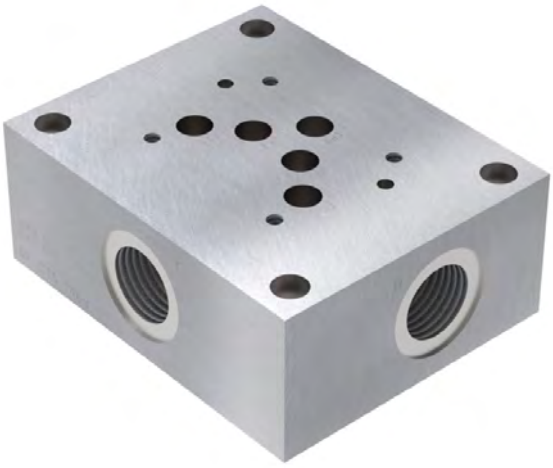

DESCRIPTION

A compact subplate with basic 4 port layout. Optimised internal drillings ensure that pressure drops are minimised for best system efficiency. 3/4" BSP ports, optional 1/8" BSP Pilot & Drain ports (denoted by XY in part code).

FEATURES

- Steel (zinc plate, clear passivate).
- Compact, efficient design.
- 350 bar max, zinc plated.

SYMBOL

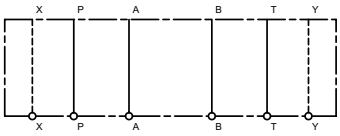

DIMENSIONS (mm)

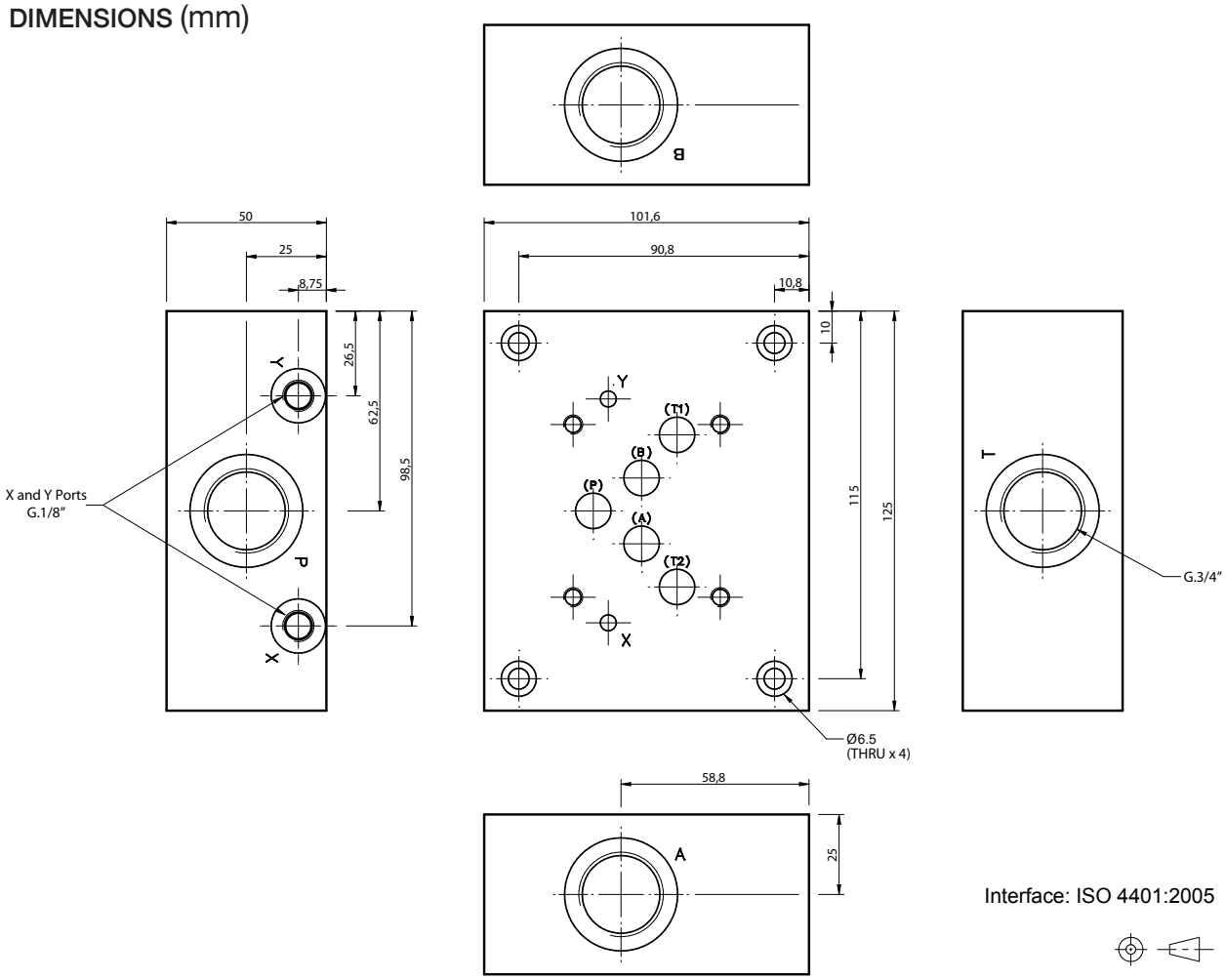

Interface: ISO 4401:2005

Ordering Chart

Part No.	Description	Max. pressure (bar)
RF-HSL-1469-X-Y-S	CETOP 5 SIDE ENTRY SUBPLATE 3/4 BSPP	350

CETOP 03 SUBPLATE WITH RELIEF

DESCRIPTION

This is a compact high capacity Cetop 3 single station sub-plate and direct acting relief. The relief has low pressure rise characteristic, is fast acting and is extremely stable in response to load changes. This sub-plate offers the choice of base or side entry P and T ports and is ideal for either tank top mounting or stand-alone.

FEATURES

- Steel (zinc plated) material options.
- Port sizes, 3/8 for Pressure and services, 1/2 BSP for tank.
- Max pressure 350 bar.
- Options for pressure setting range

SCHEMATIC

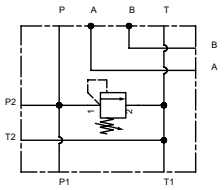

DIMENSIONS (mm)

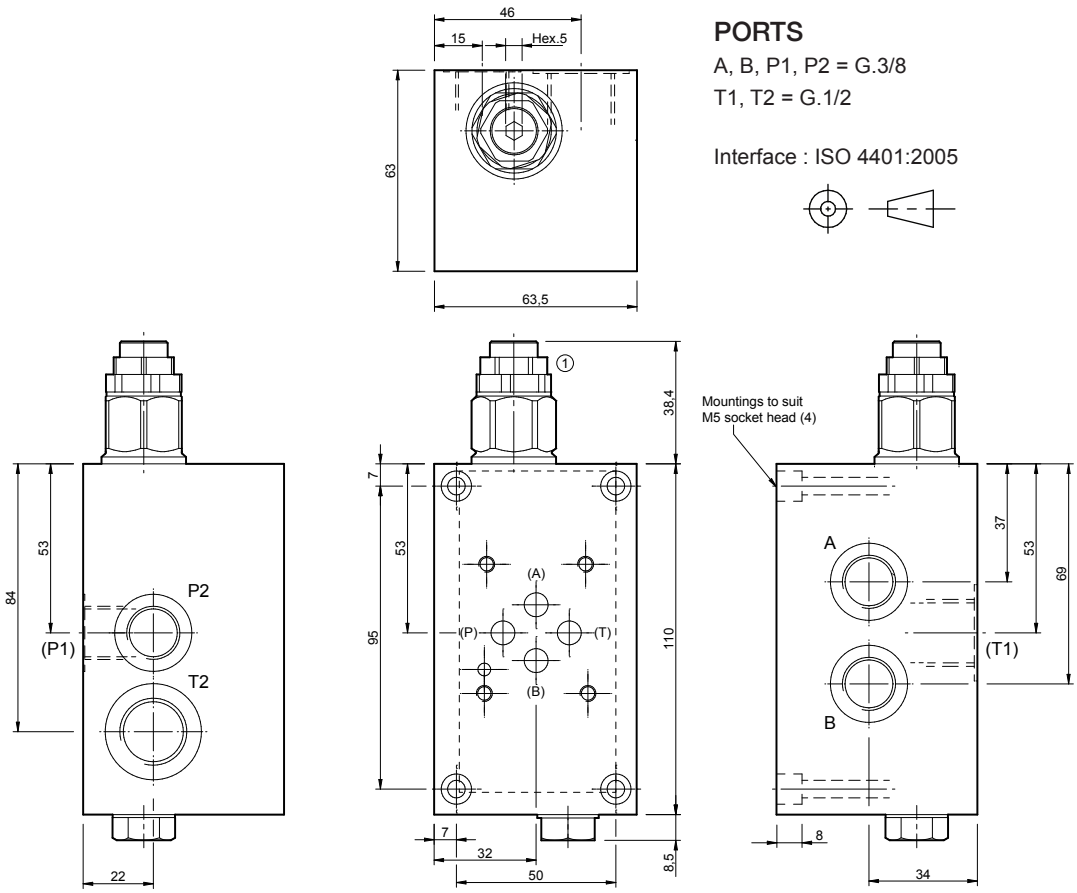

Ordering Chart

Part No.	Description	Pressure range (bar)
RF-HSL-855-RVS-24-S	CETOP 3 RELIEF SUBPLATE 3/8 BSPP	10-240

CETOP 05 SUBPLATE WITH RELIEF

DESCRIPTION

This is a compact high capacity Cetop 5 single station sub-plate and pilot operated relief. The relief has low pressure rise characteristic offering a smooth transition in response to load changes. This sub-plate offers the choice of base or side entry P and T ports and is ideal for either tank top mounting or stand-alone.

FEATURES

- Steel (zinc plated) material options.
- 3/4" BSP P,T,A & B.
- Max pressure 350 bar.
- Adjustable pressure range 7-276 bar.

SCHEMATIC

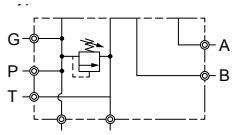

DIMENSIONS (mm)

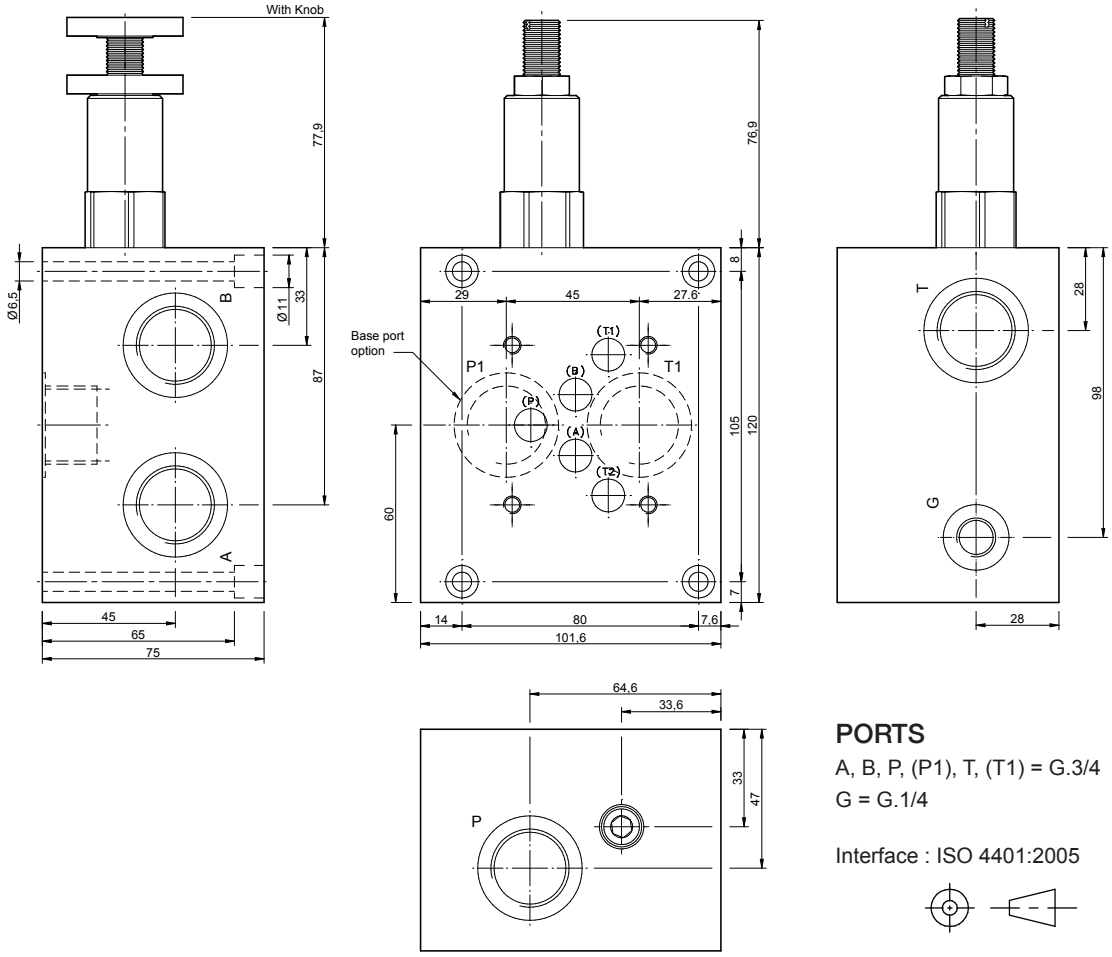

PORTS

A, B, P, (P1), T, (T1) = G.3/4

G = G.1/4

Interface : ISO 4401:2005

Ordering Chart

Part No.	Description	Pressure range (bar)
RF-HSL-1146	CETOP 5 RELIEF SUBPLATE 3/4 BSPP	7-276

CETOP 03

Cast iron multi-station manifolds with P + T ports ½ BSP and service ports 3/8 BSP.

SYMBOL

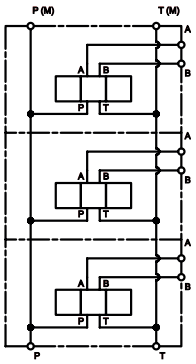

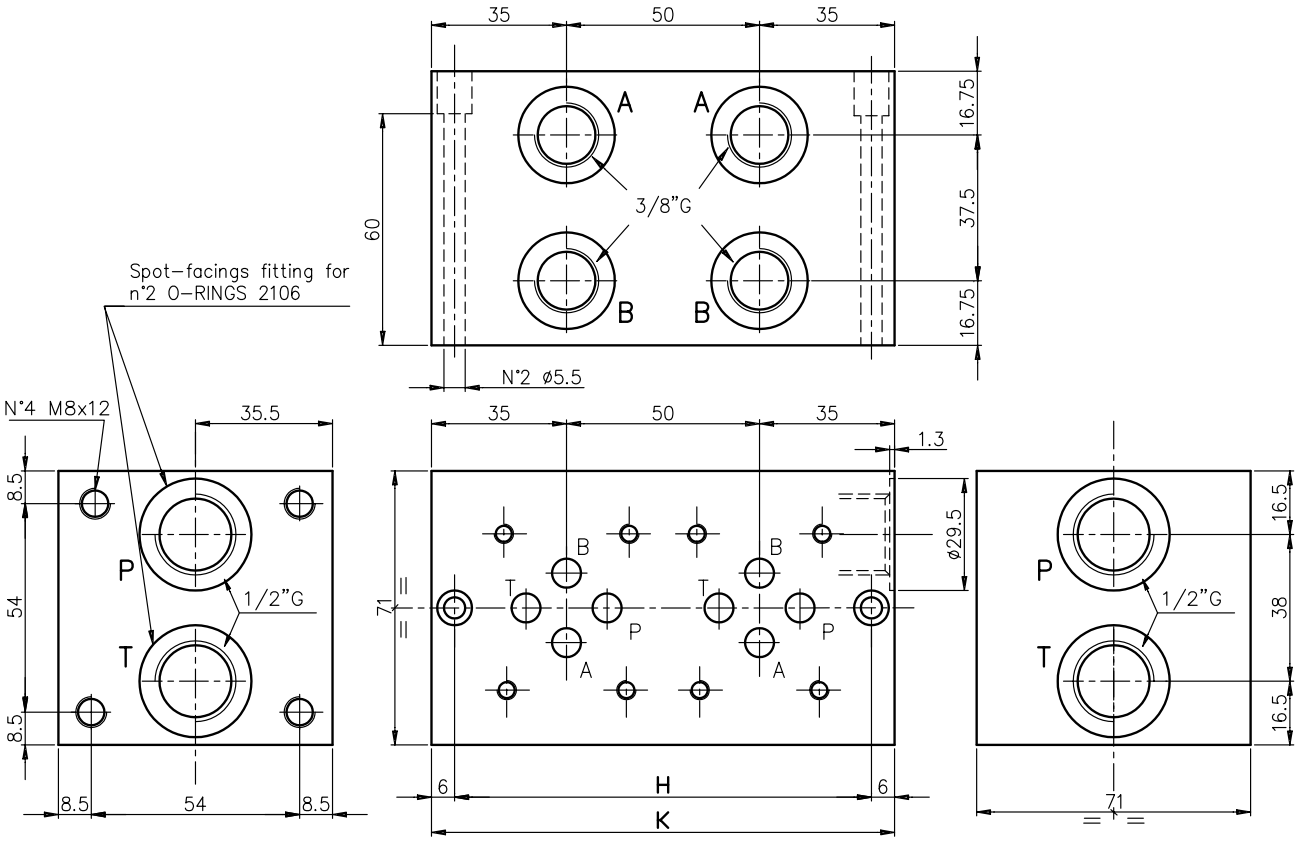

Ordering Chart

Part No.	Description	H (mm)	K (mm)	Weight (kg.)	Max. pressure (bar)
EM-213/1Y	CETOP 3 ONE STATION MANIFOLD	108	120	3.5	310
EM-213/2Y	CETOP 3 TWO STATION MANIFOLD	158	170	5	310
EM-213/3Y	CETOP 3 THREE STATION MANIFOLD	208	220	6.5	310
EM-213/4Y	CETOP 3 FOUR STATION MANIFOLD	258	270	8	310
EM-213/5Y	CETOP 3 FIVE STATION MANIFOLD	308	320	9.5	310
EM-213/6Y	CETOP 3 SIX STATION MANIFOLD	358	370	11	310
EM-213/7Y	CETOP 3 SEVEN STATION MANIFOLD	408	420	12.5	310
EM-213/8Y	CETOP 3 EIGHT STATION MANIFOLD	458	470	14	310

Note: available with relief valve on request

CETOP 05

Cast iron multi-station manifolds with P + T ports ¾ BSP and service ports ½ BSP.

SYMBOL

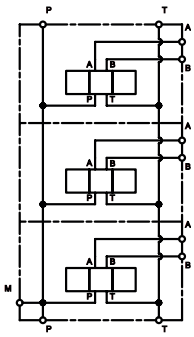

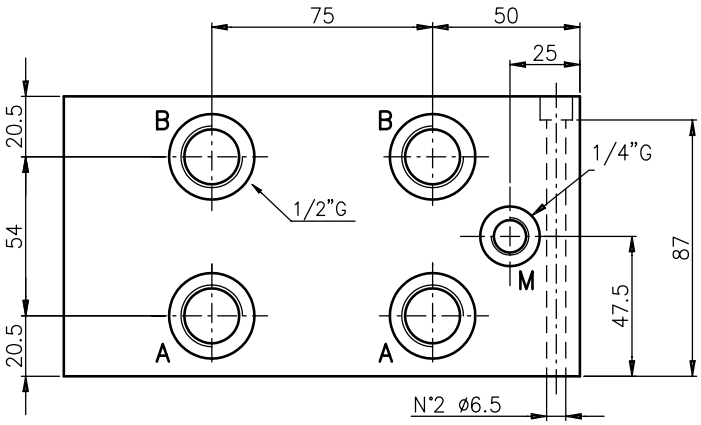

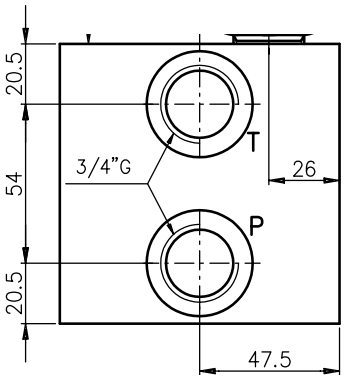

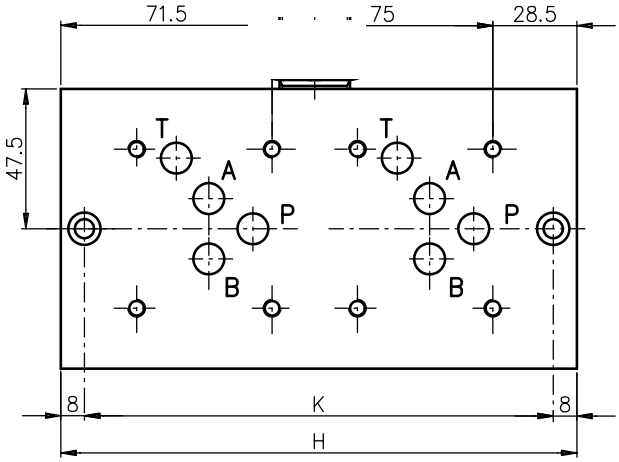

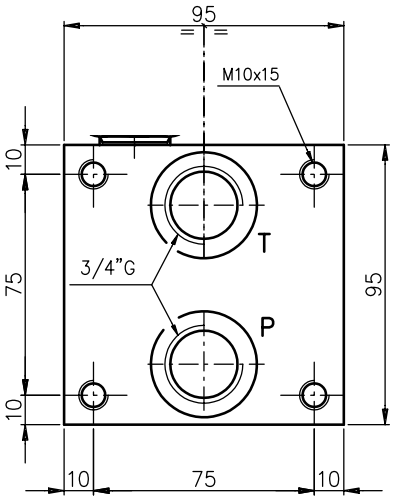

Ordering Chart

Part No.	Description	H (mm)	K (mm)	Weight (kg.)	Max. pressure (bar)
EM-205/1Y	CETOP 5 ONE STATION MANIFOLD	100	84	6	270
EM-205/2Y	CETOP 5 TWO STATION MANIFOLD	175	169	11	270
EM-205/3Y	CETOP 5 THREE STATION MANIFOLD	250	234	16	270
EM-205/4Y	CETOP 5 FOUR STATION MANIFOLD	325	309	21	270
EM-205/5Y	CETOP 5 FIVE STATION MANIFOLD	400	384	26	270
EM-205/6Y	CETOP 5 SIX STATION MANIFOLD	475	459	31	270

Note: available with relief valve on request

CETOP 03 INTERFACE BLANKING PLATE

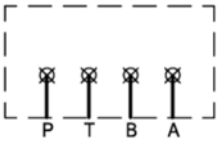

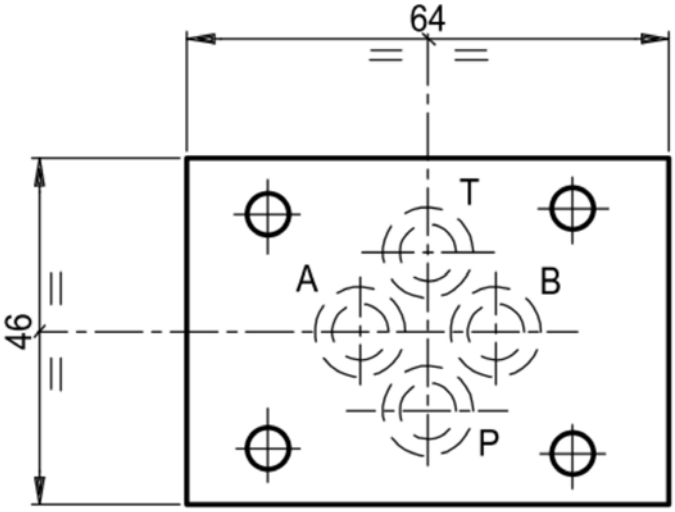

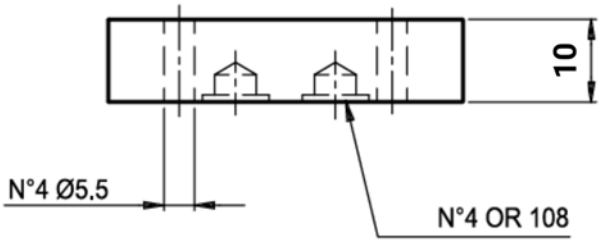

Ordering Chart

Part No.	Description	Weight (kg.)
EB1-0-3	CETOP 03 BLANKING CAP C/W	0.2

CETOP 05 INTERFACE BLANKING PLATE

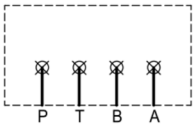

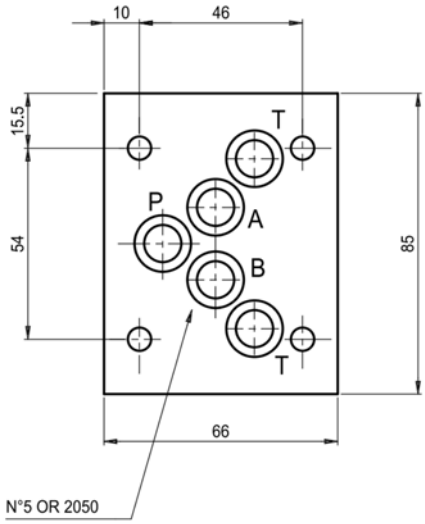

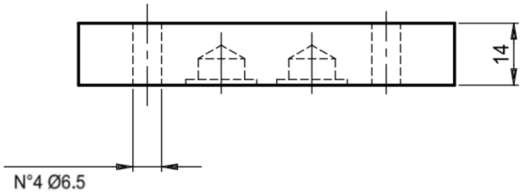

Ordering Chart

Part No.	Description	Weight (kg.)
EB1-0-5	CETOP 05 BLANKING CAP C/W	0.5

CETOP BLANKING PLATE BOLTS

Ordering Chart

Part No.	Description	Length (mm)
M5 X 20 SHCS BZP	CETOP 03 M5 X 20MM SOCKET HEAD CAP SCREW BZP	20
M6 X 20 SHCS BZP	CETOP 05 M6 X 20MM SOCKET HEAD CAP SCREW BZP	20

NOTE: Different length bolts may be required if using sandwich modules – please contact the sales office.

P & T PORT ROUTING MANIFOLD C/W RELIEF

This manifold provides a compact and versatile means of connecting the Pump and routing the Tank discharge. It is ideal for power unit builders and provides connection options to suit the build orientation.

FEATURES
- Steel
- Pressure range 10-350 bar.

SYMBOL

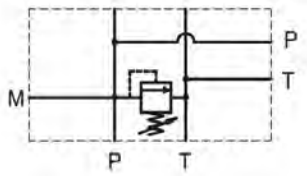

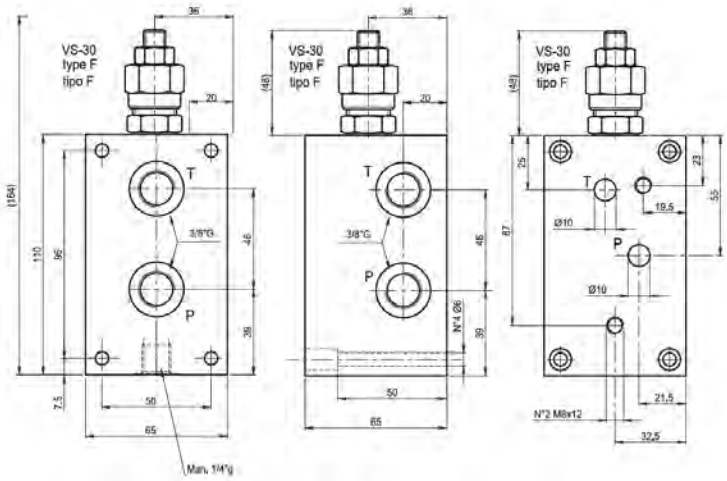

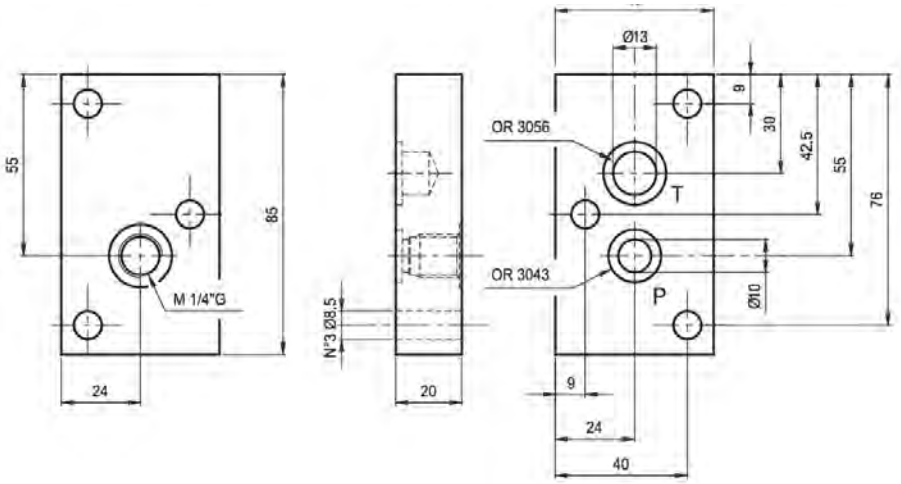

Ordering Chart

Part No.	Description	Pressure range (bar)	Max. flow (lpm)
EC2A-H-3-X-1-F	RELIEF SUBPLATE 3/8" P & T PORTS	36-100	40
EC2A-H-3-X-2-F	RELIEF SUBPLATE 3/8" P & T PORTS	50-210	40
EC2A-H-3-X-3-F	RELIEF SUBPLATE 3/8" P & T PORTS	100-310	40
EC2A-3-3	TOP PLATE WITH GAUGE PORT	N/A	N/A

Note: A top should be ordered with each subplate

Mobile directional valves

M45 MONOBLOCK VALVE	**54**
M45 ACCESSORIES	**54**
Q45 MONOBLOCK VALVE	**55**
Q45 ACCESSORIES	**55**
Q95 MONOBLOCK VALVE	**56**
Q95 ACCESSORIES	**56**

M45 MONOBLOCK VALVE

3/8” BSP Manual directional control valve with main relief valve and lever operated spring centered double acting spools. Valve supplied complete with levers.

GENERAL SPECIFICATION	M45
Working sections number	1 to 6
CIRCUIT	
Parallel	.
Parallel circuit stroke (mm)	5
Float spool extra stroke (mm)	4
Spools pitch (mm)	35
RATED FLOW	
Max recommended flow rate (l/min)	45
Max recommended flow rate (GPM)	12
RATED PRESSURE	
Max.pressure (bar)	350
Max working pressure (PSI)	5000

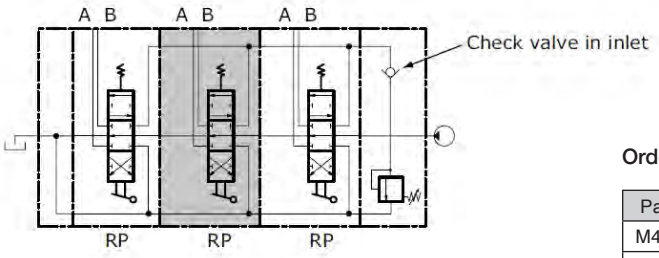

Type	M45/1	M45/2	M45/3	M45/4	M45/5	M45/6
X (mm)	67	102	137	172	207	242
Y (mm)	93	9128	16	198	233	268
Weights (kg)	2.7	4.1	5.5	6.9	8.3	9.7

Ordering Chart

Part No.	Description
M451901	1 SECTION MANUAL VALVE 3/8" BSP WITH D/A SPOOL
M451902	2 SECTION MANUAL VALVE 3/8" BSP WITH D/A SPOOL
M451903	3 SECTION MANUAL VALVE 3/8" BSP WITH D/A SPOOL
M451904	4 SECTION MANUAL VALVE 3/8" BSP WITH D/A SPOOL
M451905	5 SECTION MANUAL VALVE 3/8" BSP WITH D/A SPOOL
M451906	6 SECTION MANUAL VALVE 3/8" BSP WITH D/A SPOOL

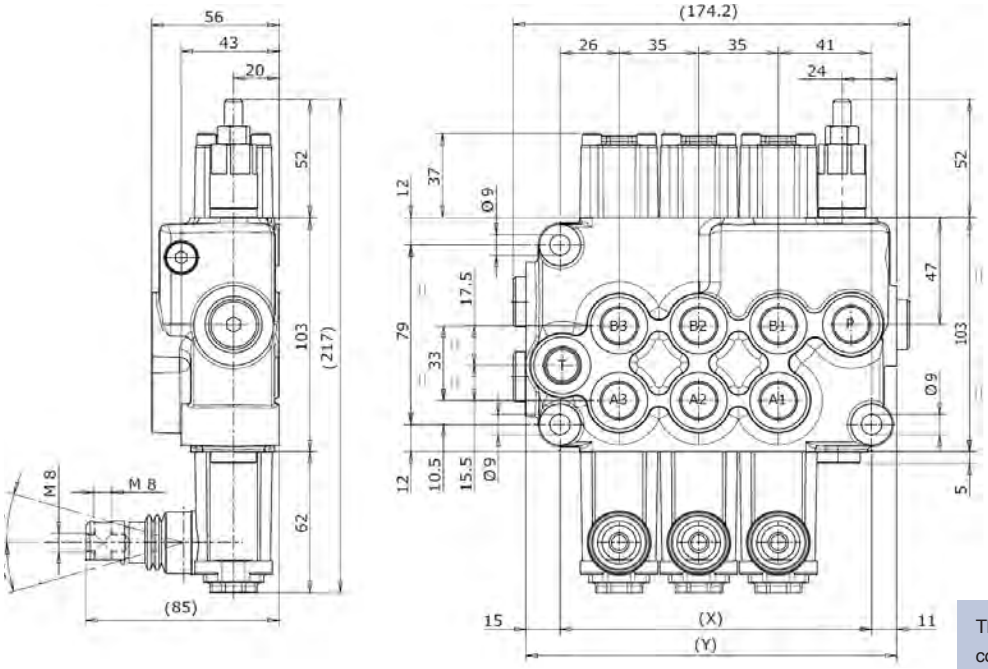

Note: Other spool types in stock / available on request

M45 ACCESSORIES

Part No.	Description
430503002	M8 x 210 STANDARD LEVER
320872007	M45 F002A DETENT KIT
421272002	M45 SPOOL P,T,A & B ALL BLOCKED - W001
421272004	M45 SPOOL A, B TO TANK, P BLOCKED - W002
421272007	M45 SINGLE ACTING SPOOL A, P & T BLOCKED - W005

The accessories provided for here allow conversion from a standard spring set to detent.

A replacement spool or modification spool to convert from closed centre to A and B to T. or single acting effect and a replacement handle.

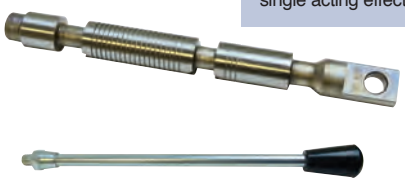

Q45 MONOBLOCK VALVE

1/2 " BSP manual directional valve with main relief and lever operated spring centered double acting spools. Valve supplied complete with levers.

GENERAL SPECIFICATION	Q45
Working sections number	1 to 8
CIRCUIT	
Parallel	.
Parallel circuit stroke (mm)	5
Float spool extra stroke (mm)	4
Spools pitch (mm)	35
RATED FLOW	
Max recommended flow rate (l/min)	50
Max recommended flow rate (GPM)	15
RATED PRESSURE	
Max.pressure (bar)	350
Max working pressure (PSI)	5000

Type	Q45/1	Q45/2	Q45/3	Q45/4	Q45/5	Q45/6
X (mm)	76	114	152	190	228	266
Y (mm)	107	145	183	221	259	297
Weights (kg)	3	4.4	5.8	7.2	8.5	10

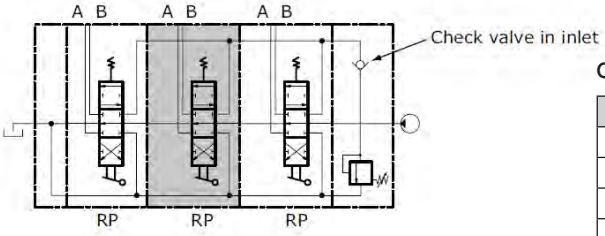

Ordering Chart

Part No.	Description
Q451901	1 SECTIONAL MANUAL VALVE 1/2" BSP WITH D/A SPOOL
Q451902	2 SECTIONAL MANUAL VALVE 1/2" BSP WITH D/A SPOOL
Q451903	3 SECTIONAL MANUAL VALVE 1/2" BSP WITH D/A SPOOL
Q451904	4 SECTIONAL MANUAL VALVE 1/2" BSP WITH D/A SPOOL
Q451905	5 SECTIONAL MANUAL VALVE 1/2" BSP WITH D/A SPOOL
Q451906	6 SECTIONAL MANUAL VALVE 1/2" BSP WITH D/A SPOOL
Q451907	7 SECTIONAL MANUAL VALVE 1/2" BSP WITH D/A SPOOL
Q451908	8 SECTIONAL MANUAL VALVE 1/2" BSP WITH D/A SPOOL

Note: Other spool types in stock / available on request

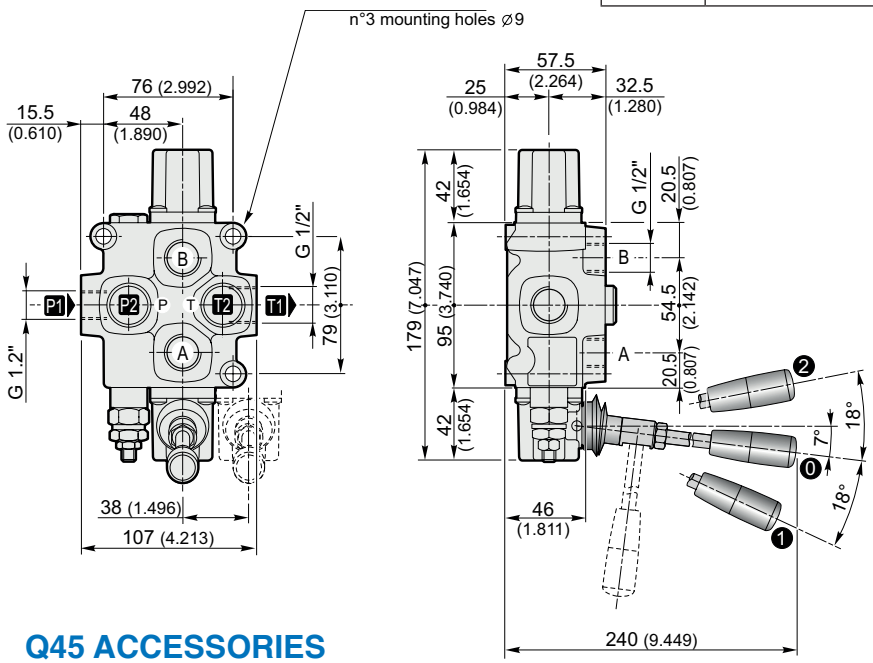

Q45 ACCESSORIES

Part No.	Description
430503002	M8 x 210 STANDARD LEVER
03743R3	Q45 3 POSITION DETENT KIT
KR30111	Q45 SPOOL A & B TO T, P BLOCKED
KR30103	Q45 SPOOL P, T, A & B ALL BLOCKED
KR30101-102	Q45 SINGLE ACTING SPOOL A, P & T BLOCKED

The accessories provided for here allow conversion from a standard spring set to detent.

A replacement spool or modification spool to convert from closed centre to A and B to T. or single acting effect and a replacement handle.

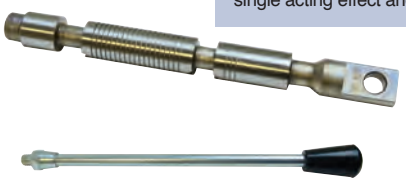

Q95 MONOBLOCK VALVE

3/4“ BSP manual directional valve with main relief and lever operated spring centered double acting spools. Valve supplied complete with levers.

GENERAL SPECIFICATION	Q95
Working sections number	1
CIRCUIT	
Parallel	
Parallel circuit stroke (mm)	9
Float spool extra stroke (mm)	8
Spools pitch (mm)	48
RATED FLOW	
Max recommended flow rate (l/min)	100
Max recommended flow rate (GPM)	22
RATED PRESSURE	
Max. pressure (bar)	300
Max working pressure (PSI)	4350

Type	Q95/1
X (mm)	76
Y (mm)	107
Weights (kg)	5.7

Part No.	Description
Q951901	1 SECTIONAL MANUAL CONTROL VALVE 3/4" D/A SPOOL
Q951902	1 SECTIONAL MANUAL CONTROL VALVE 3/4" MOTOR SPOOL

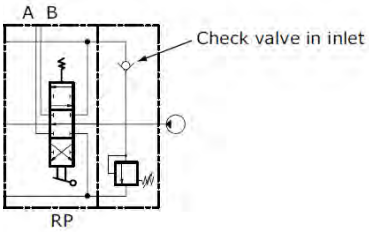

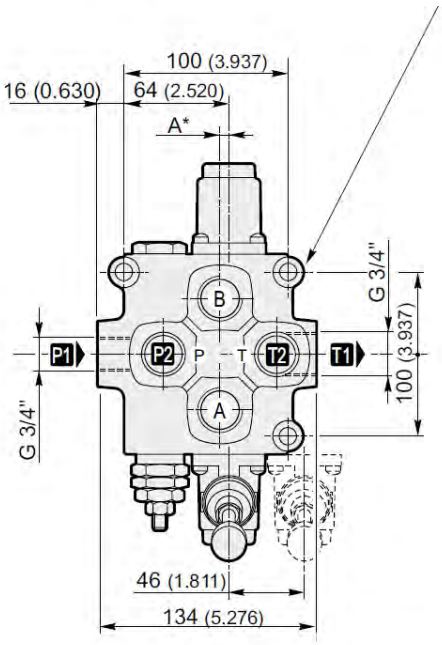

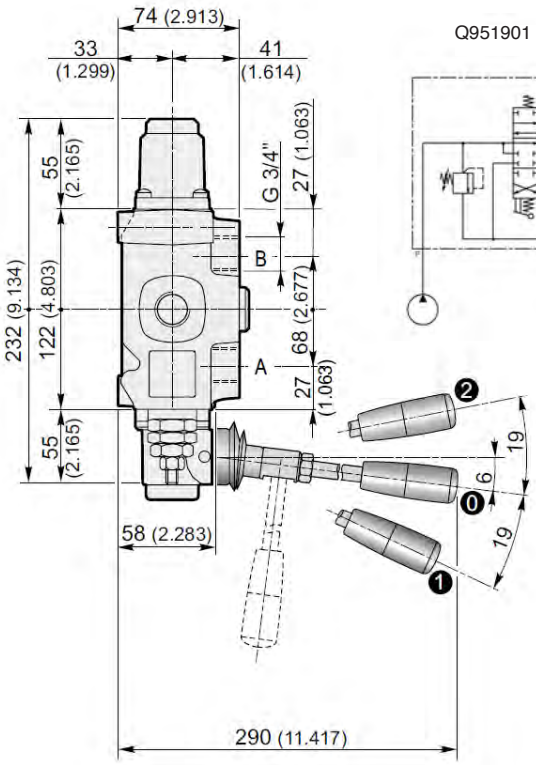

Q951901

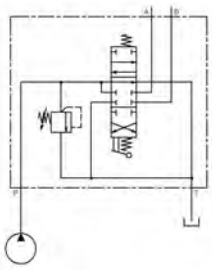

Q951902

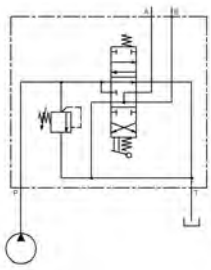

Note: Other spool types in stock / available on request

The accessories provided for here allow conversion from a standard spring set to detent.

A replacement spool or modification spool to convert from closed centre to A and B to T. or single acting effect and a replacement handle.

Q95 ACCESSORIES

Part No.	Description
060002701399	Q95 M10 x 210 STANDARD LEVER
08743R3	Q95 3 POSITION DETENT R3
060002790899	Q95 HIGH PRESSURE CARRY OVER PLUG

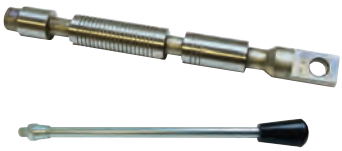

Line mounted valves

HYDRAULIC SWIVEL ADAPTER	58
HOSE BURST VALVE - VUBA	59
CHECK VALVES - VUR-BSP	60
MALE/MALE ADAPTOR CHECK VALVE - VUN-BSP	61
DIRECT ACTING RELIEF VALVES - VMDR40 - 40 LPM	62
DIRECT ACTING RELIEF VALVES - VMDR90 - 80 LPM	63
DIRECT ACTING RELIEF VALVES - VMDR120 - 120 LPM	64
DOUBLE CROSS LINE RELIEF VALVES - VBDC - 40 LPM	65
MOTOR FLANGE MOUNTED DOUBLE CROSS LINE RELIEF VALVES TO SUIT WP & WR MOTORS - 40 LPM	66
MOTOR FLANGE MOUNTED DOUBLE CROSS LINE RELIEF VALVES TO SUIT WS MOTORS - 40 LPM	67
SINGLE ACTING PILOT CHECK VALVE - VRSE	68
DOUBLE ACTING PILOT CHECK VALVE - VRDE	69
SINGLE ACTING PILOT CHECK VALVE - VRPE	70
UNIDIRECTIONAL FLOW CONTROL VALVE - VURF	71
BIDIRECTIONAL FLOW CONTROL VALVE - VBRF	72
UNIDIRECTIONAL FLOW CONTROL VALVE - STUF-BSP	73
BIDIRECTIONAL FLOW CONTROL VALVE - STBF-BSP	74
PRESSURE COMPENSATED FLOW CONTROL VALVES - VRC	75
DUAL OVER CENTRE VALVE - VBCD FOR OPEN CENTRE	76
DUAL OVER CENTRE VALVE - VBCC FOR CLOSED CENTRE	77
SINGLE OVER CENTRE VALVE - VBCL FOR OPEN CENTRE	78
SINGLE OVER CENTRE VALVE – VCCL FOR CLOSED CENTRE	79
SHUTTLE VALVE - VUSF	80
TWO WAY HIGH PRESSURE BALL VALVE - RAS2	81
THREE WAY HIGH PRESSURE BALL VALVE - RAS3	82
PRESSURE REDUCING VALVE - D-DFPRP	83
FLOW DIVIDERS	84
PRESSURE SEQUENCE VALVE - D-DFPWI	86
PROPORTIONAL PRESSURE CONTROL - D-IPDAR43C	87
2-POSITION 2-WAY SOLENOID VALVE - D-SJS	88
2-POSITION 2-WAY SOLENOID VALVE	90
2-POSITION 3-WAY SOLENOID DIVERTER VALVE - DFS3A	92
FLOW DIVERTER – IDF4	94

Hydrastore
Hydraulic Systems & Components

HYDRAULIC SWIVEL ADAPTER

Mineral oil	IS0 6743/4 (DIN 51524)
Oil viscosity	15-250 mm²/s (15 to 250 cSt)
Max contamination index with filter	IS0 4406:1999 Class 19/17/14

Oil temperature	-20°C to +80°C
Ambient temperature	-20°C to +50°C

A filter is necessary to protect the valve (advised filtration 15 µm)

Symbol

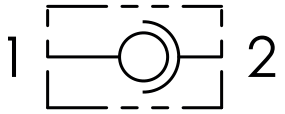

TIGHTENING TORQUES FOR STUD

②	Nm
BSPP 1/4	40
BSPP 3/8	90
BSPP 1/2	120
BSPP 3/4	210
BSPP 1	370

60° FEMALE SWIVEL ENDS TIGHTENING TORQUE VALUES

①	Nm
BSPP 1/4	20
BSPP 3/8	35
BSPP 1/2	60
BSPP 3/4	115
BSPP 1	140

GGIL140
GGIL380
GGIL120

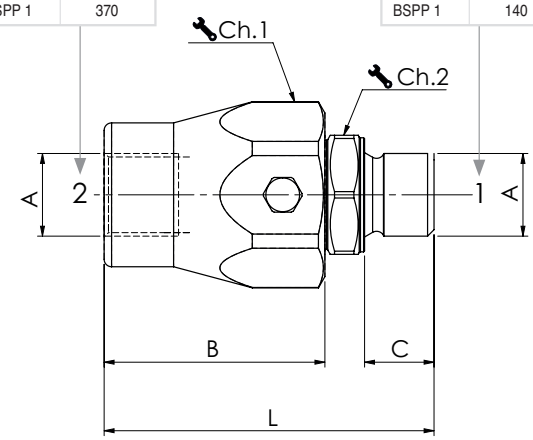

GGIL340
GGIL100

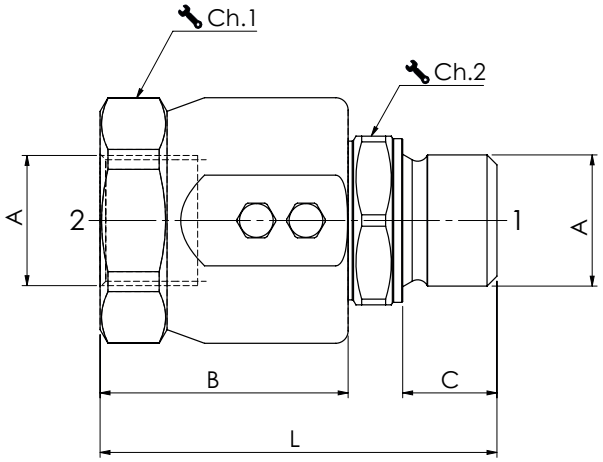

Dimensions
mm

Type	A	Max. flow (lpm)	Max. pressure (bar)	Max. rotation pressure (bar)	Max. rotation speed (rev)	B	C	Ch.1	Ch.2	L	Approx. weight (kg)
GGIL140	BSP 1/4	25	400	200	212	42	11	30	19	61	0.21
GGIL380	BSP 3/8	35	400	200	173	44	14	34	24	66	0.27
GGIL120	BSP 1/2	60	300	150	160	47	15	36	27	71	0.34
GGIL340	BSP 3/4	100	300	150	120	50	19	45	34	80	0.66
GGIL100	BSP 1	180	300	100	100	57	21	50	41	90	0.9

Ordering Chart

Part No.	Description	Size (BSP)	Max. flow (lpm)	Max. pressure (bar)
GGIL140	1/4" BSP IN-LINE ROTATING COUPLING	1/4	25	200
GGIL380	3/8" BSP IN-LINE ROTATING COUPLING	3/8	35	200
GGIL120	1/2" BSP IN-LINE ROTATING COUPLING	1/2	60	150
GGIL340	3/4" BSP IN-LINE ROTATING COUPLING	3/4	100	150
GGIL100	1" BSP IN-LINE ROTATING COUPLING	1	180	100

HOSE BURST VALVE - VUBA

Mineral oil	IS0 6743/4 (DIN 51524)
Oil viscosity	15-250 mm²/s (15 to 250 cSt)
Max contamination index with filter	IS0 4406:1999 Class 19/17/14

Oil temperature	-20°C to +80°C
Ambient temperature	-20°C to +50°C

A filter is necessary to protect the valve (advised filtration 15 µm)

Max leakage	0.015 in³/min - 5 drops/in

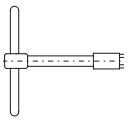

Tool

Dimensions		
Tool's type	Type	Weight kg
61700001	VUBA140	0.12
61700002	VUBA380	0.13
61700003	VUBA120	0.15

Symbol

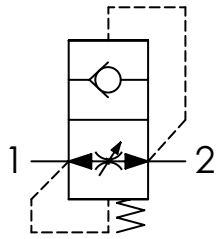

F setting on request

Orifice on flat poppet on request

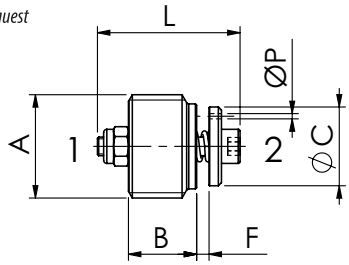

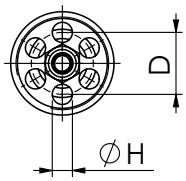

Cavity

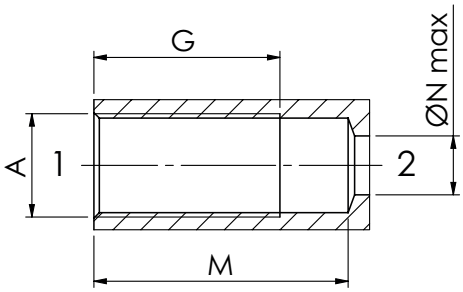

Dimensions
mm

Type	A	Max. flow (lpm)	Max. pressure (bar)	B	C	D	G	H	L	M	N	Tightening torque Nm	Approx Weight (kg)
VUBA140	BSP 1/4	25	350	8.2	10.4	8	25	2.5	19	35	7	2	0.008
VUBA380	BSP 3/8	50	350	11	12.7	10	30	3.25	23	41	9.5	3	0.014
VUBA120	BSP 1/2	80	350	13	15	11.5	33	4	29	46	12	4	0.025

Ordering Chart

Part No.	Description	Size (BSP)	Max. flow (lpm)	Max. pressure (bar)
VUBA-140-61100087	1/4" BSP HOSE BURST VALVE	1/4	25	350
VUBA-380-61100088	3/8" BSP HOSE BURST VALVE	3/8	50	350
VUBA-120-61100089	1/2" BSP HOSE BURST VALVE	1/2	80	350

Note: Valves are supplied unset

Note: Bodies available on request

Note: Valve supplied with barrell

CHECK VALVES - VUR-BSP

Mineral oil	IS0 6743/4 (DIN 51524)
Oil viscosity	15-250 mm²/s (15 to 250 cSt)
Max contamination index with filter	IS0 4406:1999 Class 19/17/14

Oil temperature	-20°C to +80°C
Ambient temperature	-20°C to +50°C

A filter is necessary to protect the valve (advised filtration 15 µm)

Max leakage	0.015 in³/min - 5 drops/in

Symbol

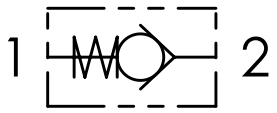

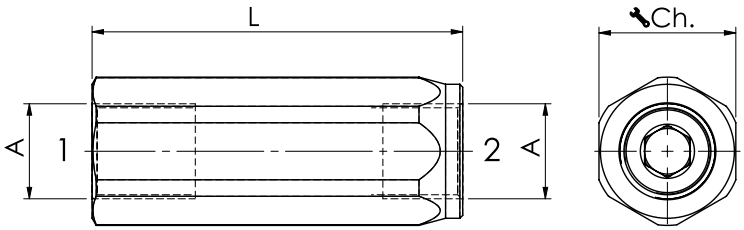

Dimensions
mm

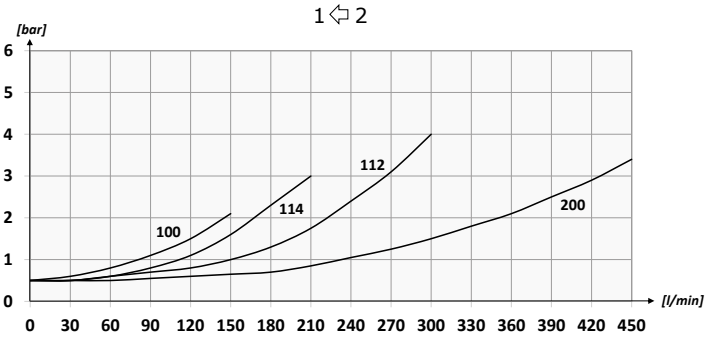

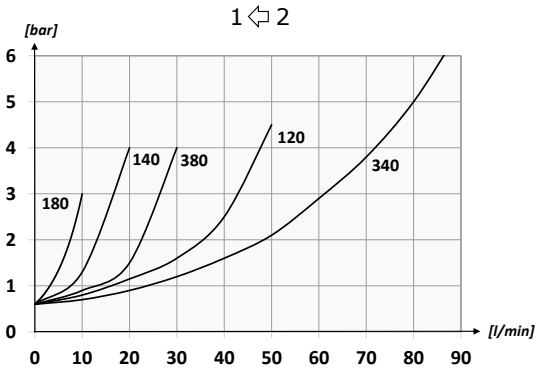

Type	A	Max. flow (lpm)	Max. pressure (bar)	L	Ch.	Weight (kg)
VUR140	BSP 1/4	15	400	55	19	0.1
VUR380	BSP 3/8	30	400	65	24	0.18
VUR120	BSP 1/2	50	400	75	27	0.23
VUR340	BSP 3/4	90	400	86.5	35	0.45
VUR100	BSP 1	150	350	110	41	0.73
VUR114	BSP 1 1/4	200	350	123	54	1.5
VUR112	BSP 1 1/2	300	350	138	59	1.85
VUR200	BSP 2	430	250	145	69	2.7

Ordering Chart

Part No.	Description	Size (BSP)	Max. flow (lpm)	Max. pressure (bar)
VUR-140-SP-0.5	1/4" BSP BALL TYPE CHECK VALVE - 0.5 BAR	1/4	15	400
VUR-380-SP-0.5	3/8" BSP BALL TYPE CHECK VALVE - 0.5 BAR	3/8	30	400
VUR-120-SP-0.5	1/2" BSP BALL TYPE CHECK VALVE - 0.5 BAR	1/2	50	400
VUR-340-SP-0.5	3/4" BSP BALL TYPE CHECK VALVE - 0.5 BAR	3/4	90	400
VUR-100-SP-0.5	1" BSP BALL TYPE CHECK VALVE - 0.5 BAR	1	150	350
VUR-114-SP-0.5	1 1/4" BSP BALL TYPE CHECK VALVE - 0.5 BAR	1 1/4	200	350
VUR-112-SP-0.5	1 1/2" BSP BALL TYPE CHECK VALVE - 0.5 BAR	1 1/2	300	350
VUR-200-SP-0.5	2" BSP BALL TYPE CHECK VALVE - 0.5 BAR	2	430	250

MALE/MALE ADAPTOR CHECK VALVE - VUN-BSP

Mineral oil	IS0 6743/4 (DIN 51524)
Oil viscosity	15-250 mm²/s (15 to 250 cSt)
Max contamination index with filter	IS0 4406:1999 Class 19/17/14

Oil temperature	-20°C to +80°C
Ambient temperature	-20°C to +50°C

A filter is necessary to protect the valve (advised filtration 15 µm)

Max leakage	0.015 in³/min - 5 drops/in

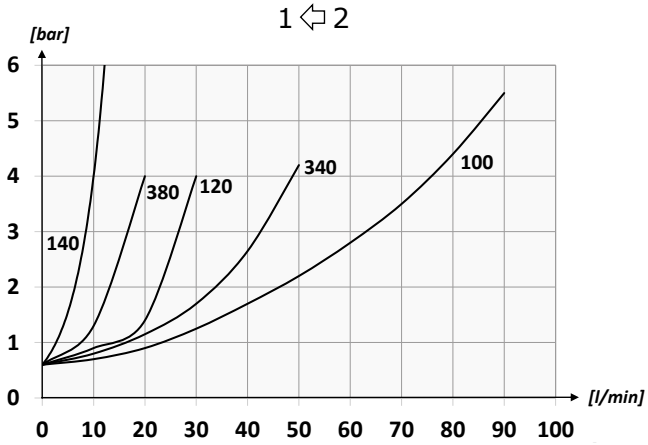

Symbol

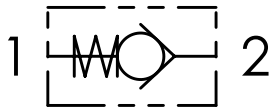

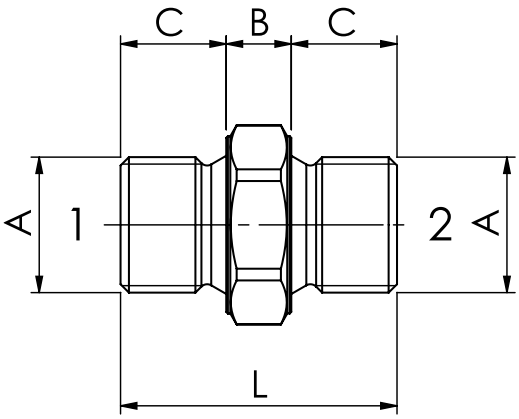

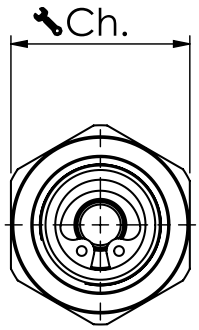

Dimensions
mm

Type	A	Max. flow (lpm)	Max. pressure (bar)	L	B	C	Ch	Approx. Weight (kg)
VUN140	BSP 1/4	5	500	29	7	11	19	0.03
VUN380	BSP 3/8	15	500	34	8	13	22	0.05
VUN120	BSP 1/2	30	500	44	16	14	27	0.11

Ordering Chart

Part No.	Description	Size (BSP)	Max. flow (lpm)	Max. pressure (bar)
VUN-140-SF-0.5	M/M ADAPTOR CHECK VALVES - 0.5 BAR	1/4	5	500
VUN-380-SF-0.5	M/M ADAPTOR CHECK VALVES - 0.5 BAR	3/8	15	500
VUN-120-SF-0.5	M/M ADAPTOR CHECK VALVES - 0.5 BAR	1/2	30	500

Hydrastore
Hydraulic Systems & Components

DIRECT ACTING RELIEF VALVES - VMDR40 - 40 LPM

Mineral oil	IS0 6743/4 (DIN 51524)
Oil viscosity	15-250 mm²/s (15 to 250 cSt)
Max contamination index with filter	IS0 4406:1999 Class 19/17/14

Oil temperature	-20°C to +80°C
Ambient temperature	-20°C to +50°C

A filter is necessary to protect the valve (advised filtration 15 µm)

Symbol

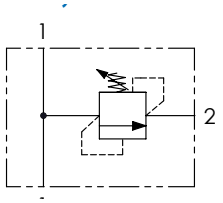

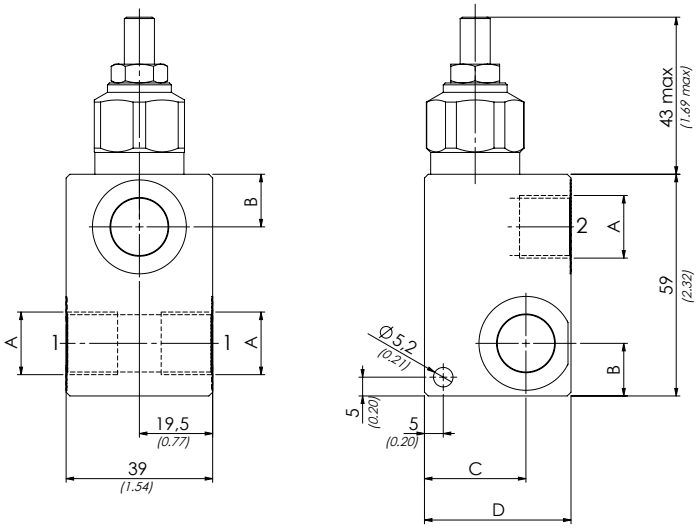

Dimensions
mm
(inches)

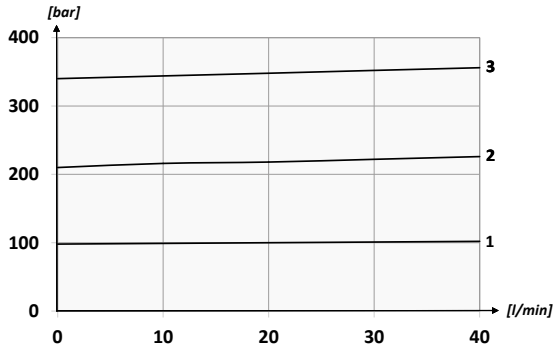

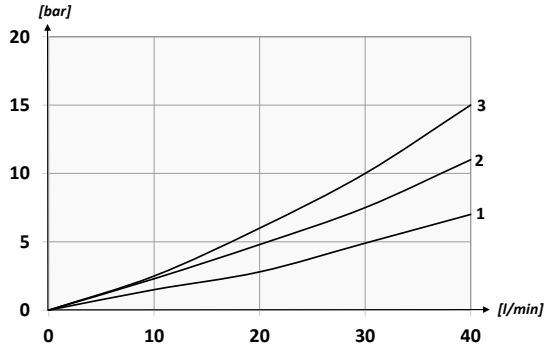

Type	A	Max. flow (lpm)	Max. pressure (bar)	B	C	D	Approx. weight (kg)
VMDR40380	BSP 3/8	40	350	14	27	39	0.64
VMDR40120	BSP 1/2	40	350	15	29.5	45	0.69

Ordering Chart

Part No.	Description	Size (BSP)	Max. flow (lpm)	Max. pressure (bar)
VMDR40-380-C-1	3/8" BSP DIRECT ACTING RELIEF VALVES 10-90 BAR	3/8	40	350
VMDR40-120-C-1	1/2" BSP DIRECT ACTING RELIEF VALVES 10-90 BAR	1/2	40	350
VMDR40-380-C-2	3/8" BSP DIRECT ACTING RELIEF VALVES 20-210 BAR	3/8	40	350
VMDR40-120-C-2	1/2" BSP DIRECT ACTING RELIEF VALVES 20-210 BAR	1/2	40	350

DIRECT ACTING RELIEF VALVES - VMDR90 - 80 LPM

Mineral oil	IS0 6743/4 (DIN 51524)
Oil viscosity	15-250 mm²/s (15 to 250 cSt)
Max contamination index with filter	IS0 4406:1999 Class 19/17/14

Oil temperature	-20°C to +80°C
Ambient temperature	-20°C to +50°C

A filter is necessary to protect the valve (advised filtration 15 µm)

Symbol

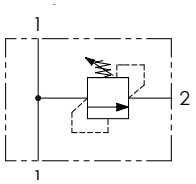

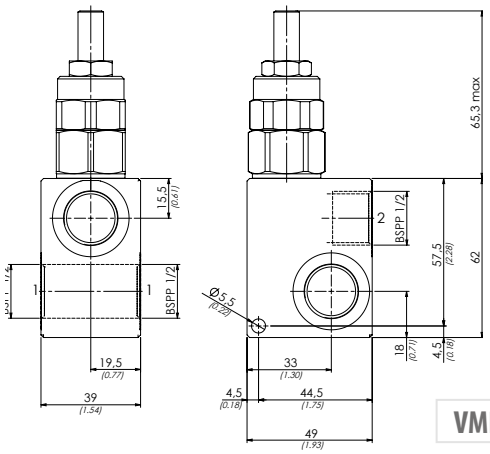

VMDR90120

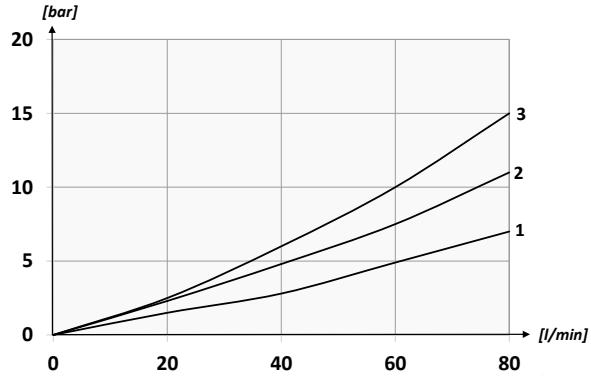

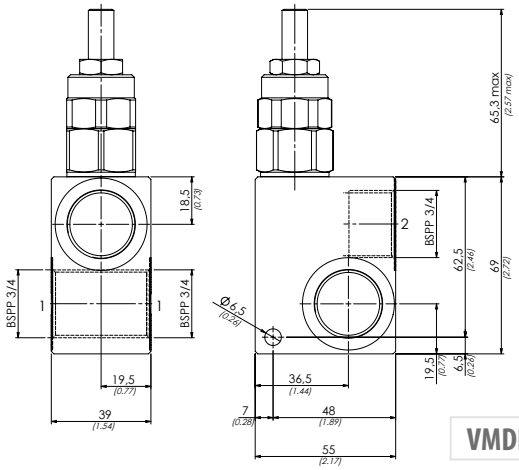

VMDR90340

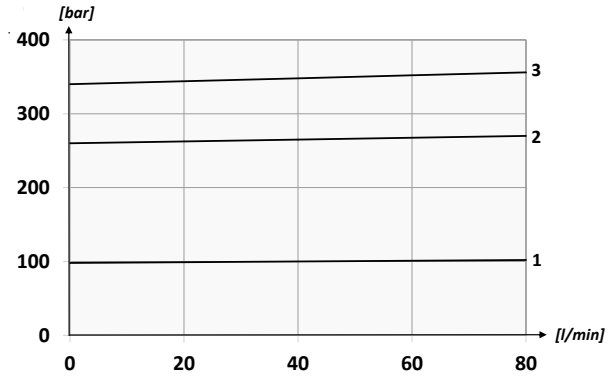

Dimensions
mm
(inches)

Type	Max. flow (lpm)	Max. pressure (bar)	Approx. weight (kg)
VMDR90120	80	350	0.65
VMDR90340	80	350	1

Ordering Chart

Part No.	Description	Size (BSP)	Max. flow (lpm)	Max. pressure (bar)
VMDR90-120-C-1	1/2" BSP DIRECT ACTING RELIEF VALVES 10-100 BAR	1/2	80	350
VMDR90-340-C-1	3/4" BSP DIRECT ACTING RELIEF VALVES 10-100 BAR	3/4	80	350
VMDR90-120-C-2	1/2" BSP DIRECT ACTING RELIEF VALVES 20-250 BAR	1/2	80	350
VMDR90-340-C-2	3/4" BSP DIRECT ACTING RELIEF VALVES 20-250 BAR	3/4	80	350

Hydrastore
Hydraulic Systems & Components

DIRECT ACTING RELIEF VALVES - VMDR120 - 120 LPM

Mineral oil	IS0 6743/4 (DIN 51524)
Oil viscosity	15-250 mm²/s (15 to 250 cSt)
Max contamination index with filter	IS0 4406:1999 Class 19/17/14

Oil temperature	-20°C to +80°C
Ambient temperature	-20°C to +50°C

A filter is necessary to protect the valve (advised filtration 15 µm)

Symbol

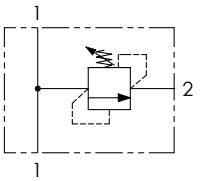

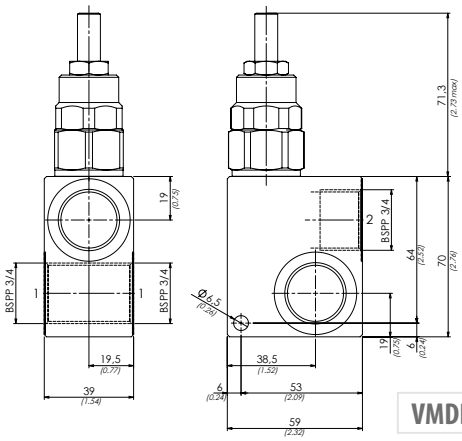

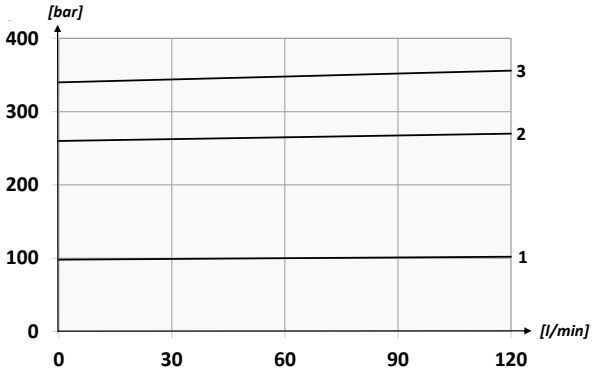

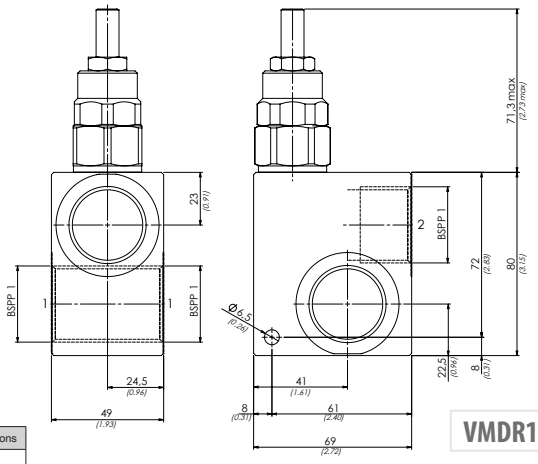

Dimensions
mm
(inches)

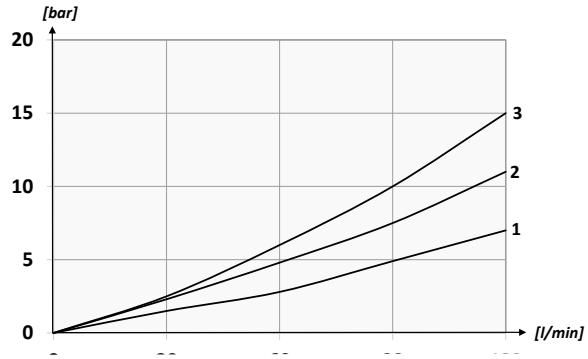

Type	Max. flow (lpm)	Max. pressure (bar)	Approx. weight (kg)
VMDR120340	120	350	1.1
VMDR120100	120	350	1.7

Ordering Chart

Part No.	Description	Size (BSP)	Max. flow (lpm)	Max. pressure (bar)
VMDR120-340-C-2	3/4" BSP DIRECT ACTING RELIEF VALVES 20 - 250 BAR	3/4	120	350
VMDR120-100-C-2	1" BSP DIRECT ACTING RELIEF VALVES 20 - 250 BAR	1	120	350

DOUBLE CROSS LINE RELIEF VALVES - VBDC - 40 LPM

Mineral oil	IS0 6743/4 (DIN 51524)
Oil viscosity	15-250 mm²/s (15 to 250 cSt)
Max contamination index with filter	IS0 4406:1999 Class 19/17/14

Oil temperature	-20°C to +80°C
Ambient temperature	-20°C to +50°C

A filter is necessary to protect the valve (advised filtration 15 µm)

Symbol

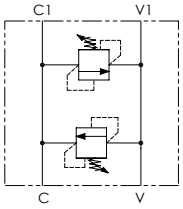

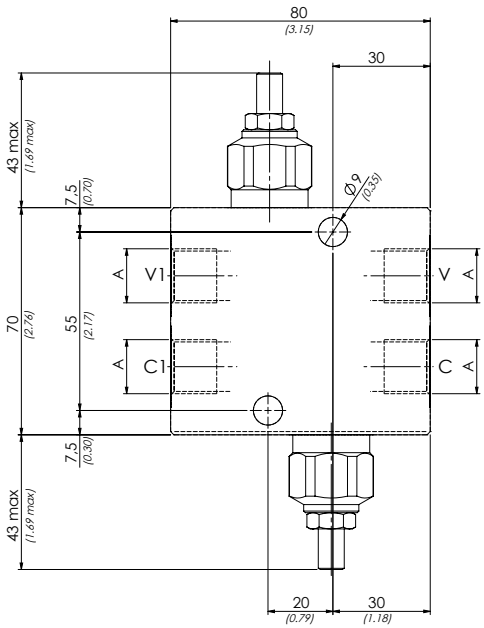

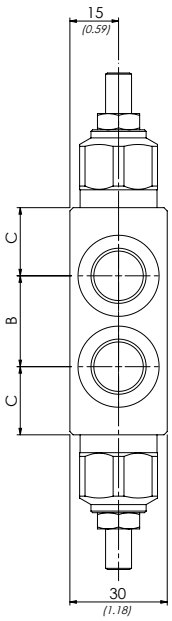

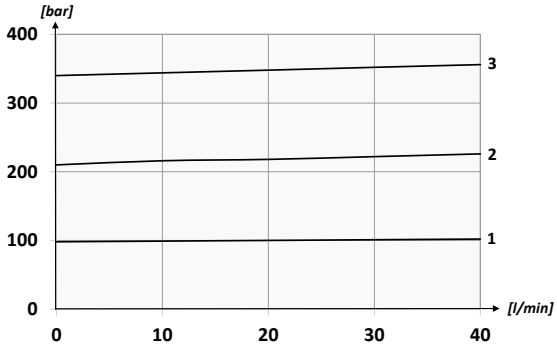

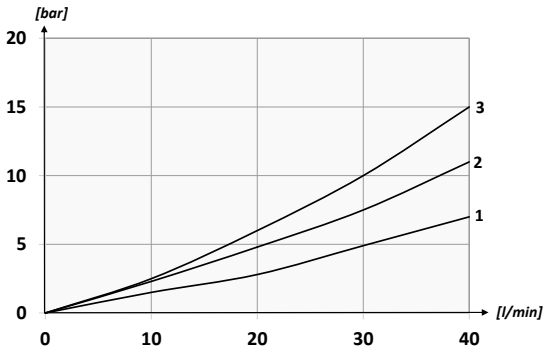

Dimensions
mm
(inches)

Type	A	Max. flow (lpm)	Max. pressure (bar)	B	C	Approx. weight (kg)	Type of valve
VBDC380	BSP 3/8	40	350	28	21	1.18	VMD40S
VBDC120	BSP 1/2	40	350	33	18.5	1.12	VMD40S

Ordering Chart

Part No.	Description	Size (BSP)	Max. flow (lpm)	Max. pressure (bar)
VBDC-380-2	3/8" BSP DUAL CROSS LINE RELIEF VALVES 20-210 BAR	3/8	40	350
VBDC-120-2	1/2" BSP DUAL CROSS LINE RELIEF VALVES 20-210 BAR	1/2	40	350

Hydrastore
Hydraulic Systems & Components

MOTOR FLANGE MOUNTED DOUBLE CROSS LINE RELIEF VALVES TO SUIT WP & WR MOTORS - 40 LPM

Mineral oil	IS0 6743/4 (DIN 51524)
Oil viscosity	15-250 mm²/s (15 to 250 cSt)
Max contamination index with filter	IS0 4406:1999 Class 19/17/14

Oil temperature	-20°C to +80°C
Ambient temperature	-20°C to +50°C

A filter is necessary to protect the valve (advised filtration 15 µm)

Symbol

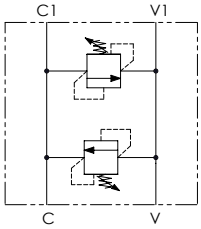

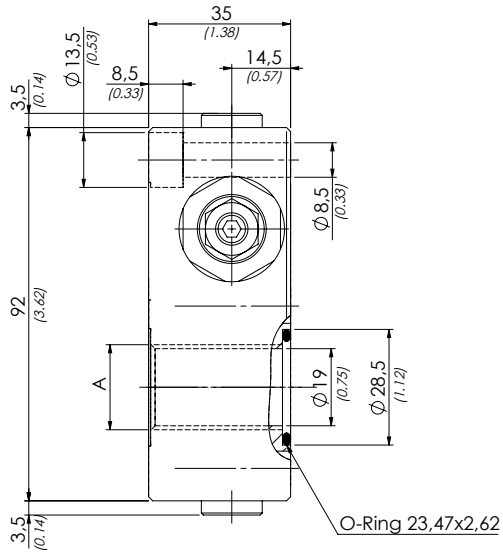

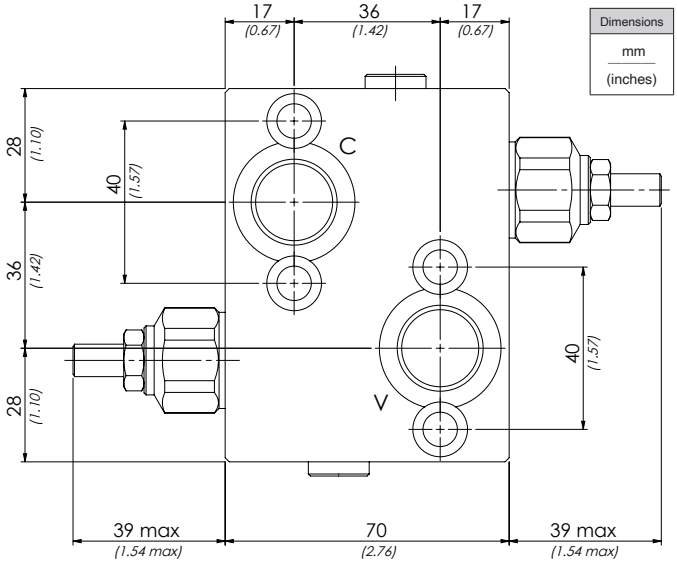

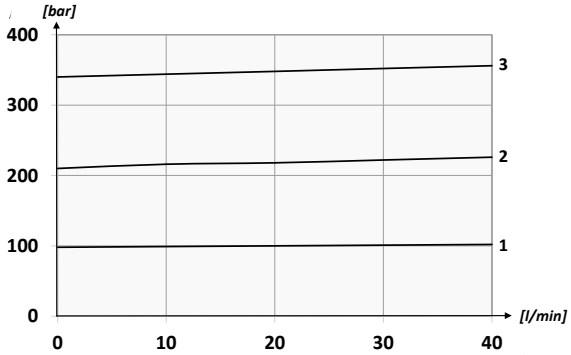

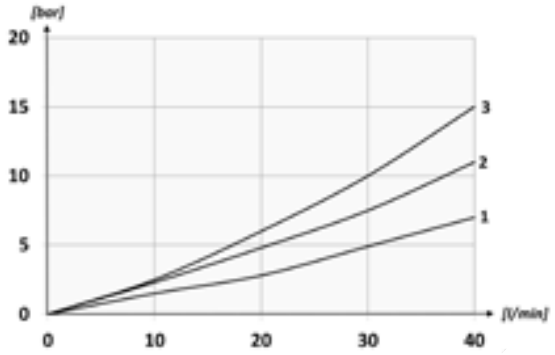

Type	A	Max. flow (lpm)	Max. pressure (bar)	Approx. weight (kg)	Type of valve
DCF120	BSP 1/2	40	350	1.5	VMD40S

Ordering Chart

Part No.	Description	Size (BSP)	Max. flow (lpm)	Max. pressure (bar)
DCF-120-2	DUAL X LINE RELIEF FOR WP & WR MOTORS 20-210 BAR	1/2	40	350

MOTOR FLANGE MOUNTED DOUBLE CROSS LINE RELIEF VALVES TO SUIT WS MOTORS - 40 LPM

Mineral oil	IS0 6743/4 (DIN 51524)
Oil viscosity	15-250 mm²/s (15 to 250 cSt)
Max contamination index with filter	IS0 4406:1999 Class 19/17/14

Oil temperature	-20°C to +80°C
Ambient temperature	-20°C to +50°C

A filter is necessary to protect the valve (advised filtration 15 µm)

Symbol

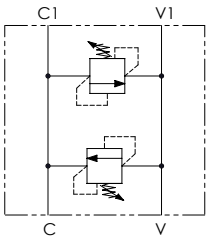

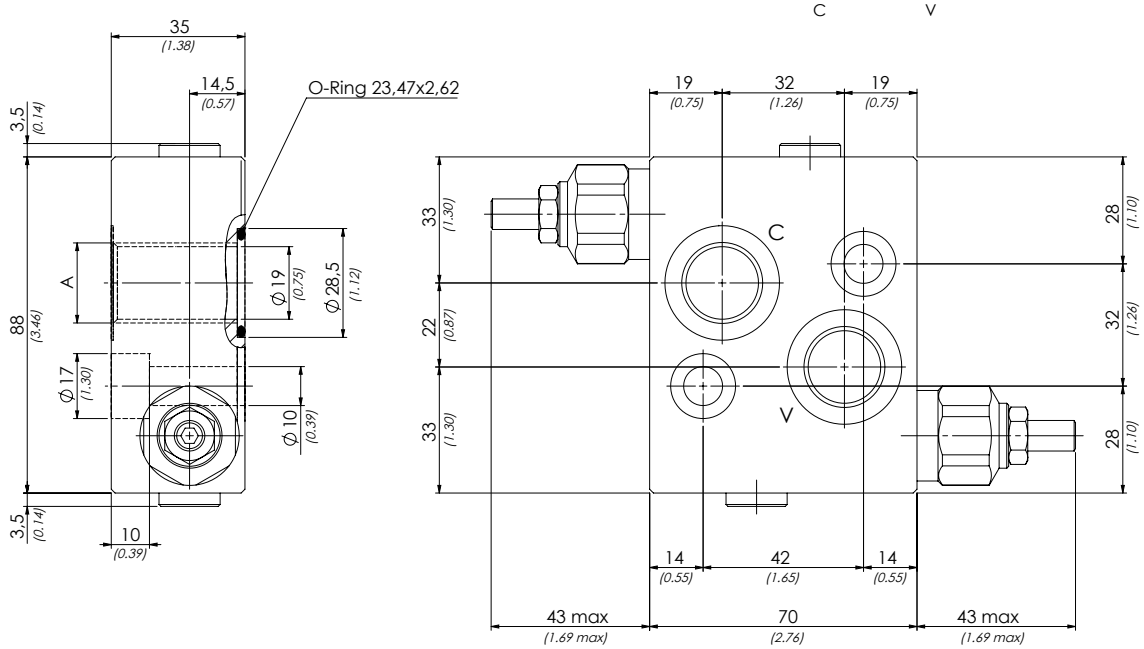

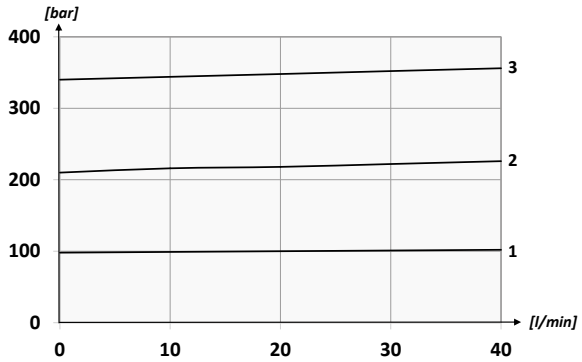

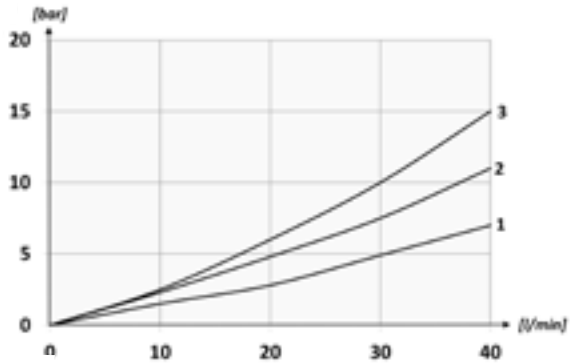

Type	A	Max. flow (lpm)	Max. pressure (bar)	Approx. weight (kg)	Type of valve
DCM120	BSP 1/2	40	350	1.45	VMD40S

Ordering Chart

Part No.	Description	Size (BSP)	Max. flow (lpm)	Max. pressure (bar)
DCM-120-2	DUAL X LINE RELIEF FOR WS MOTORS 20-210 BAR	1/2	40	350

Hydrastore
Hydraulic Systems & Components

SINGLE ACTING PILOT CHECK VALVE - VRSE

Mineral oil	IS0 6743/4 (DIN 51524)
Oil viscosity	15-250 mm²/s (15 to 250 cSt)
Max contamination index with filter	IS0 4406:1999 Class 19/17/14

Oil temperature	-20°C to +80°C
Ambient temperature	-20°C to +50°C

A filter is necessary to protect the valve (advised filtration 15 µm)

Max leakage	0.015 in³/min - 5 drops/in

Symbol

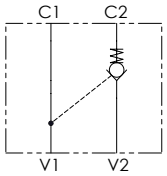

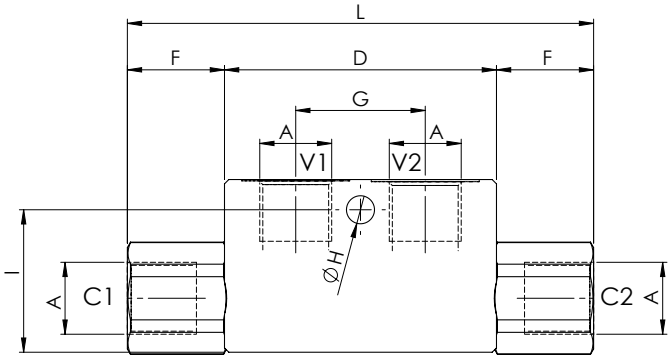

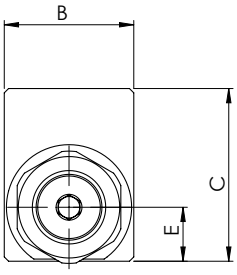

Dimensions
mm

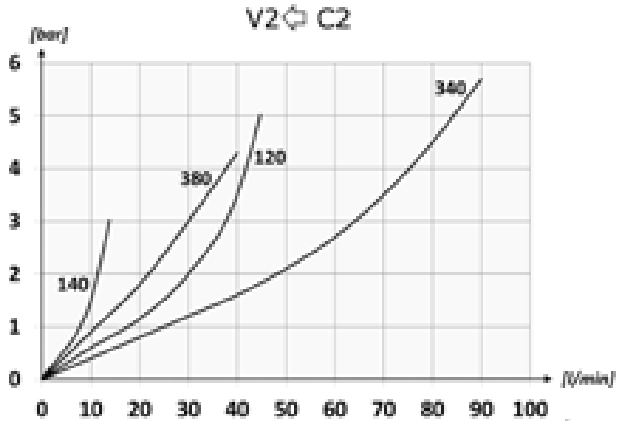

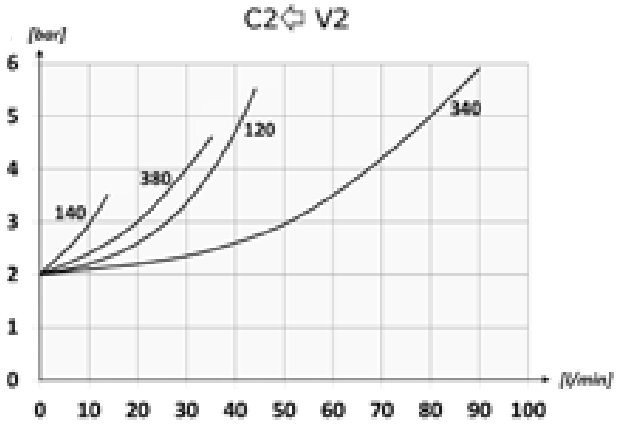

Type	A	Max. flow (lpm)	Max. pressure (bar)	B	C	D	E	F	G	H	I	L	Approx. weight (kg)	Pilot ratio
VRSE140	BSP 1/4	15	320	30	40	63	12.5	22.5	30	6.5	33	108	0.64	1:4
VRSE380	BSP 3/8	35	320	30	40	63	12.5	22.5	30	6.5	33	108	0.59	1:4
VRSE120	BSP 1/2	45	300	35	50	82	16.5	31.5	36	6.5	35	145	1.08	1:4

Ordering Chart

Part No.	Description	Size (BSP)	Max. flow (lpm)	Max. pressure (bar)
VRSE-140	1/4" BSP SINGLE ACTING PILOT CHECK VALVE	1/4	15	320
VRSE-380	3/8" BSP SINGLE ACTING PILOT CHECK VALVE	3/8	35	320
VRSE-120	1/2" BSP SINGLE ACTING PILOT CHECK VALVE	1/2	45	300

DOUBLE ACTING PILOT CHECK VALVE - VRDE

Mineral oil	IS0 6743/4 (DIN 51524)
Oil viscosity	15-250 mm²/s (15 to 250 cSt)
Max contamination index with filter	IS0 4406:1999 Class 19/17/14

Oil temperature	-20°C to +80°C
Ambient temperature	-20°C to +50°C

A filter is necessary to protect the valve (advised filtration 15 µm)

Max leakage	0.015 in³/min - 5 drops/in

Symbol

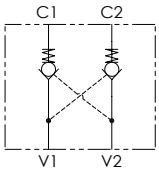

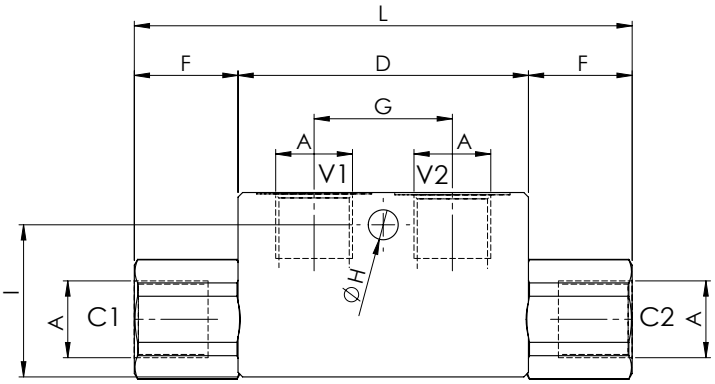

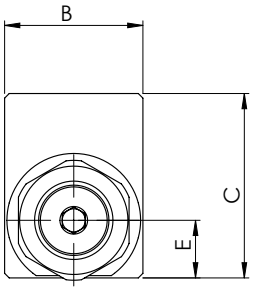

Dimensions
mm

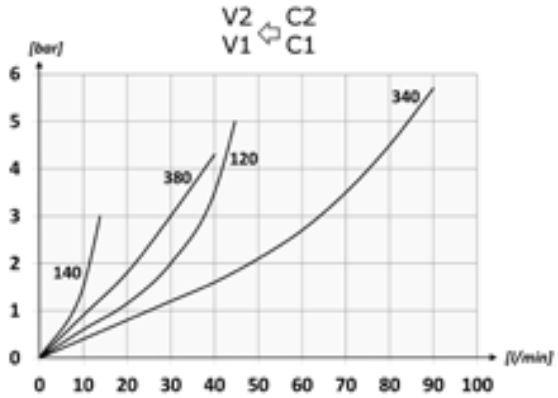

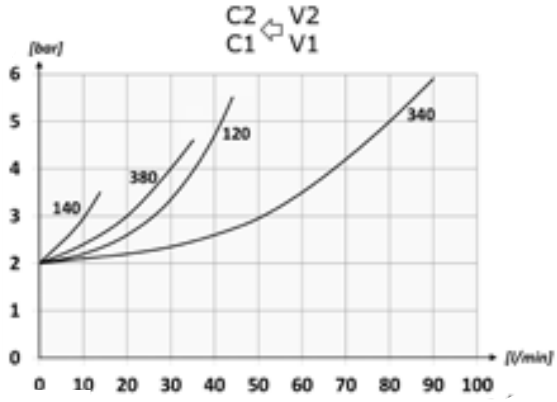

Type	A	Max. flow (lpm)	Max. pressure (bar)	B	C	D	E	F	G	H	I	L	Approx. weight (kg)	Pilot ratio
VRDE140	BSP 1/4	15	350	30	40	63	12.5	22.5	30	6.5	33	108	0.64	1:4
VRDE380	BSP 3/8	35	350	30	40	63	12.5	22.5	30	6.5	33	108	0.6	1:4
VRDE120	BSP 1/2	45	350	35	50	82	16.5	31.5	36	6.5	35	145	1.1	1:4
VRDE340	BSP 3/4	70	350	40	60	100	22.5	46	50	8.5	50	192	2	1:2.9

Ordering Chart

Part No.	Description	Size (BSP)	Max. flow (lpm)	Max. pressure (bar)
VRDE-140	1/4" BSP DOUBLE ACTING PILOT CHECK VALVE	1/4	15	350
VRDE-380	3/8" BSP DOUBLE ACTING PILOT CHECK VALVE	3/8	35	350
VRDE-120	1/2" BSP DOUBLE ACTING PILOT CHECK VALVE	1/2	45	350
VRDE-340	3/4" BSP DOUBLE ACTING PILOT CHECK VALVE	3/4	70	350

Hydrastore
Hydraulic Systems & Components

SINGLE ACTING PILOT CHECK VALVE - VRPE

Mineral oil	IS0 6743/4 (DIN 51524)
Oil viscosity	15-250 mm²/s (15 to 250 cSt)
Max contamination index with filter	IS0 4406:1999 Class 19/17/14

Oil temperature	-20°C to +80°C
Ambient temperature	-20°C to +50°C

A filter is necessary to protect the valve (advised filtration 15 µm)

Max leakage	0.015 in³/min - 5 drops/in

Symbol

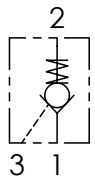

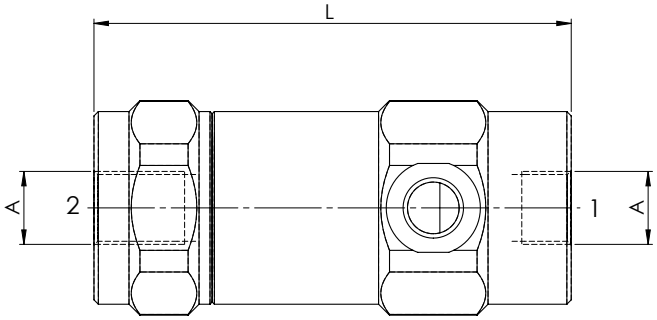

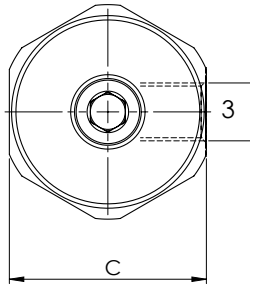

Dimensions
mm

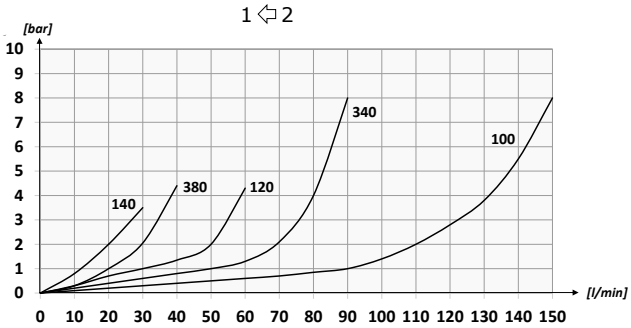

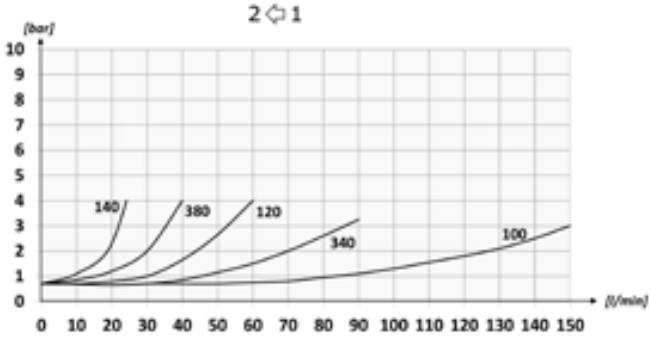

Type	A	Max. flow (lpm)	Max. pressure (bar)	L	C	Approx. weight (kg)	Pilot ratio
VRPE140	BSPP 1/4	25	350	96	40	0.84	1:5.3
VRPE380	BSPP 3/8	40	350	109	45	1.14	1:4.4
VRPE120	BSPP 1/2	60	350	122	45	1.24	1:4.2
VRPE340	BSPP 3/4	100	300	132	55	1.87	1:4
VRPE100	BSPP 1	150	300	166	65	3.22	1:4.1

Ordering Chart

Part No.	Description	Size (BSP)	Max. flow (lpm)	Max. pressure (bar)
VRPE-140	1/4" BSP SINGLE ACTING PO CHECK VALVE-BARREL TYPE	1/4	25	350
VRPE-380	3/8" BSP SINGLE ACTING PO CHECK VALVE-BARREL TYPE	3/8	40	350
VRPE-120	1/2" BSP SINGLE ACTING PO CHECK VALVE-BARREL TYPE	1/2	60	350
VRPE-340	3/4" BSP SINGLE ACTING PO CHECK VALVE-BARREL TYPE	3/4	100	300
VRPE-100	1" BSP SINGLE ACTING PO CHECK VALVE-BARREL TYPE	1	150	300

UNIDIRECTIONAL FLOW CONTROL VALVE - VURF

Mineral oil	IS0 6743/4 (DIN 51524)
Oil viscosity	15-250 mm²/s (15 to 250 cSt)
Max contamination index with filter	IS0 4406:1999 Class 19/17/14

Oil temperature	-20°C to +80°C
Ambient temperature	-20°C to +50°C

A filter is necessary to protect the valve (advised filtration 15 µm)

Symbol

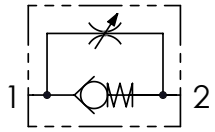

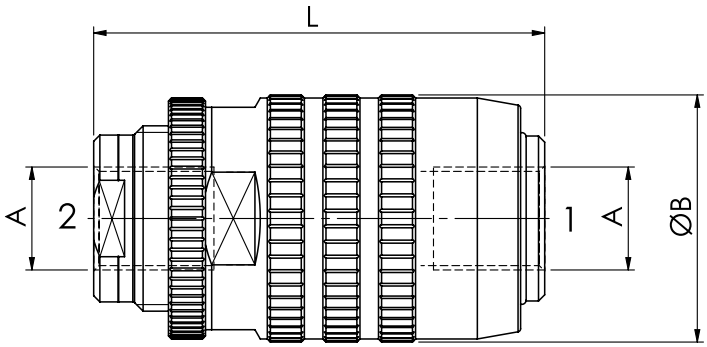

Dimensions
mm

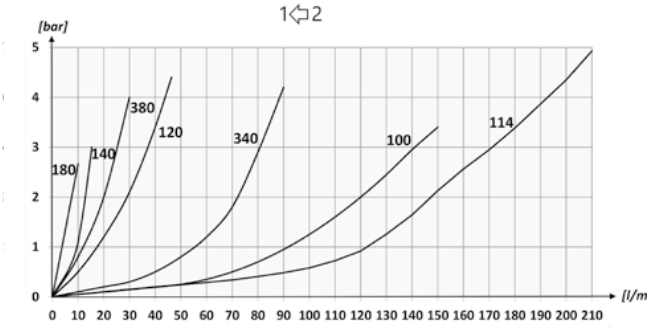

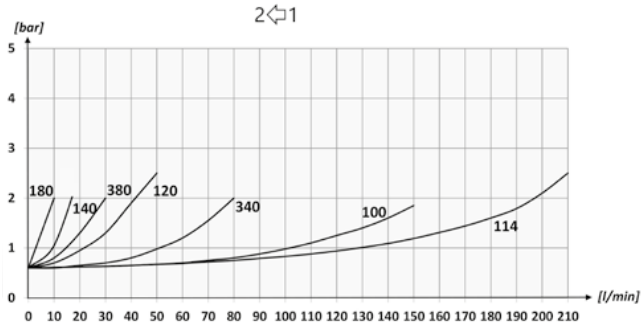

Type	A	Max. flow (lpm)	Max. pressure (bar)	B	L	Approx. weight (kg)
VURF140	BSP 1/4	15	350	34	62	0.28
VURF380	BSP 3/8	30	350	39	73	0.46
VURF120	BSP 1/2	45	350	44	83	0.66
VURF340	BSP 3/4	85	300	54	102	1.10

Ordering Chart

Part No.	Description	Size (BSP)	Max. flow (lpm)	Max. pressure (bar)
VURF-140	1/4" BSP FLOW CONTROL VALVE-BARREL TYPE	1/4	15	350
VURF-380	3/8" BSP FLOW CONTROL VALVE-BARREL TYPE	3/8	30	350
VURF-120	1/2" BSP FLOW CONTROL VALVE-BARREL TYPE	1/2	45	350
VURF-340	3/4" BSP FLOW CONTROL VALVE-BARREL TYPE	3/4	85	300

BIDIRECTIONAL FLOW CONTROL VALVE - VBRF

Mineral oil	IS0 6743/4 (DIN 51524)
Oil viscosity	15-250 mm²/s (15 to 250 cSt)
Max contamination index with filter	IS0 4406:1999 Class 19/17/14

Oil temperature	-20°C to +80°C
Ambient temperature	-20°C to +50°C

A filter is necessary to protect the valve (advised filtration 15 µm)

Symbol

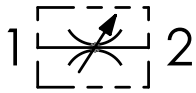

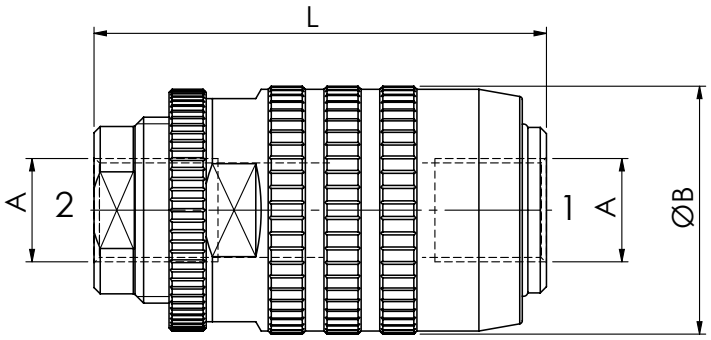

Dimensions
mm

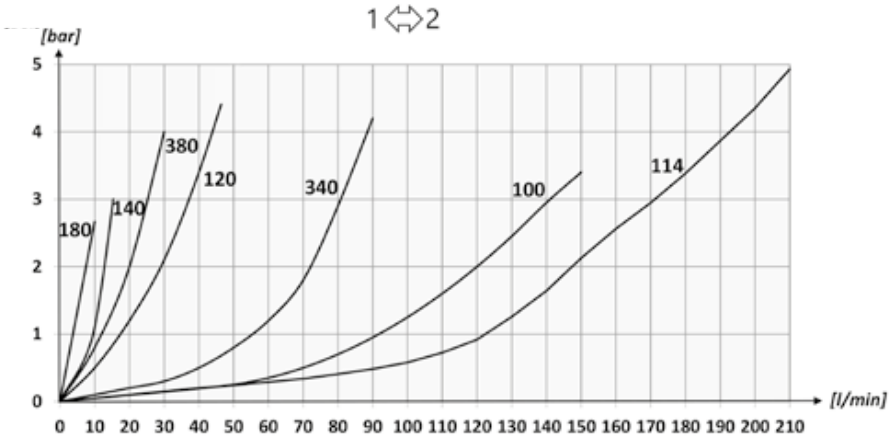

Type	A	Max. flow (lpm)	Max. pressure (bar)	B	L	Approx. weight (kg)
VBRF140	BSP 1/4	15	350	34	62	0.28
VBRF380	BSP 3/8	30	350	39	73	0.45
VBRF120	BSP 1/2	45	350	44	83	0.63
VBRF340	BSP 3/4	85	300	54	102	1.06

Ordering Chart

Part No.	Description	Size (BSP)	Max. flow (lpm)	Max. pressure (bar)
VBRF-140	1/4" BSP FLOW CONTROL VALVE- BARREL TYPE	1/4	15	350
VBRF-380	3/8" BSP FLOW CONTROL VALVE- BARREL TYPE	3/8	30	350
VBRF-120	1/2" BSP FLOW CONTROL VALVE- BARREL TYPE	1/2	45	350
VBRF-340	3/4" BSP FLOW CONTROL VALVE- BARREL TYPE	3/4	85	300

UNIDIRECTIONAL FLOW CONTROL VALVE - STUF-BSP

Mineral oil	IS0 6743/4 (DIN 51524)
Oil viscosity	15-250 mm²/s (15 to 250 cSt)
Max contamination index with filter	IS0 4406:1999 Class 19/17/14

Oil temperature	-20°C to +80°C
Ambient temperature	-20°C to +50°C

A filter is necessary to protect the valve (advised filtration 15 µm)

Symbol

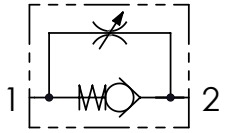

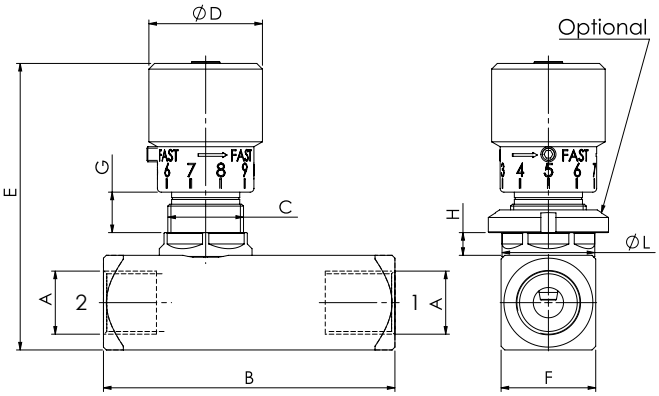

Dimensions
mm

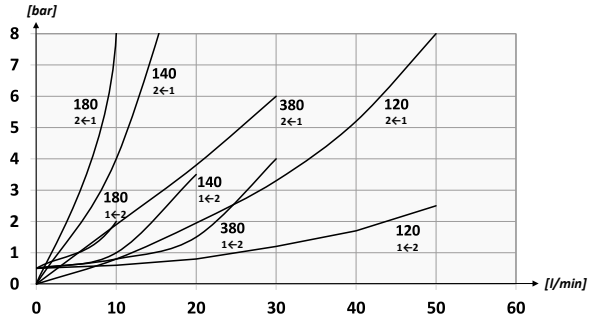

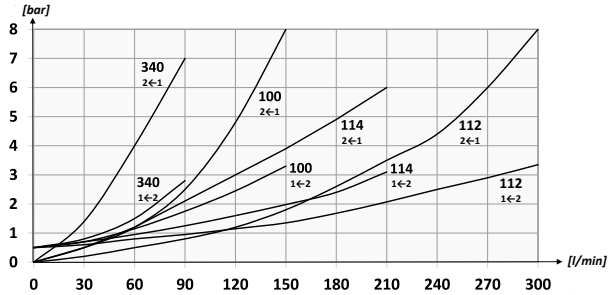

Type	A	Max. flow (lpm)	Max. pressure (bar)	B	C	D	E	F	G	H	L	Optional type	Approx. weight (kg)
STUF140	BSP 1/4	15	400	66	M20x1	30	75	25	7.5	6	24.5	84100022	0.38
STUF380	BSP 3/8	30	400	77	M20x1	30	75	25	7.5	6	24.5	84100022	0.40
STUF120	BSP 1/2	50	400	91	M25x1.5	33	81	30	9	7	29.5	84100023	0.63
STUF340	BSP 3/4	80	400	112.5	M35x1.5	42	110	40	15.5	8	39.5	84100024	1.45
STUF100	BSP 1	150	400	141	M35x1.5	42	115	45	15.5	8	39.5	84100024	2
STUF114	BSP 1 1/4	200	350	155	M45x1.5	53	137	55	13.5	10	50	84100030	3.3
STUF112	BSP 1 1/2	300	350	168	M45x1.5	53	147	65	13.5	10	50	84100030	4.7

Ordering Chart

Part No.	Description	Size (BSP)	Max. flow (lpm)	Max. pressure (bar)
STUF-140	1/4" BSP UNDIRECTIONAL FLOW CONTROL VALVE	1/4	15	400
STUF-380	3/8" BSP UNDIRECTIONAL FLOW CONTROL VALVE	3/8	30	400
STUF-120	1/2" BSP UNDIRECTIONAL FLOW CONTROL VALVE	1/2	50	400
STUF-340	3/4" BSP UNDIRECTIONAL FLOW CONTROL VALVE	3/4	80	400
STUF-100	1" BSP UNDIRECTIONAL FLOW CONTROL VALVE	1	150	400
STUF-114	1 1/4" BSP UNDIRECTIONAL FLOW CONTROL VALVE	1 1/4	200	350
STUF-112	1 1/2" BSP UNDIRECTIONAL FLOW CONTROL VALVE	1 1/2	300	350

BIDIRECTIONAL FLOW CONTROL VALVE - STBF-BSP

Mineral oil	IS0 6743/4 (DIN 51524)
Oil viscosity	15-250 mm²/s (15 to 250 cSt)
Max contamination index with filter	IS0 4406:1999 Class 19/17/14

Oil temperature	-20°C to +80°C
Ambient temperature	-20°C to +50°C

A filter is necessary to protect the valve (advised filtration 15 µm)

Symbol

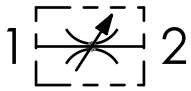

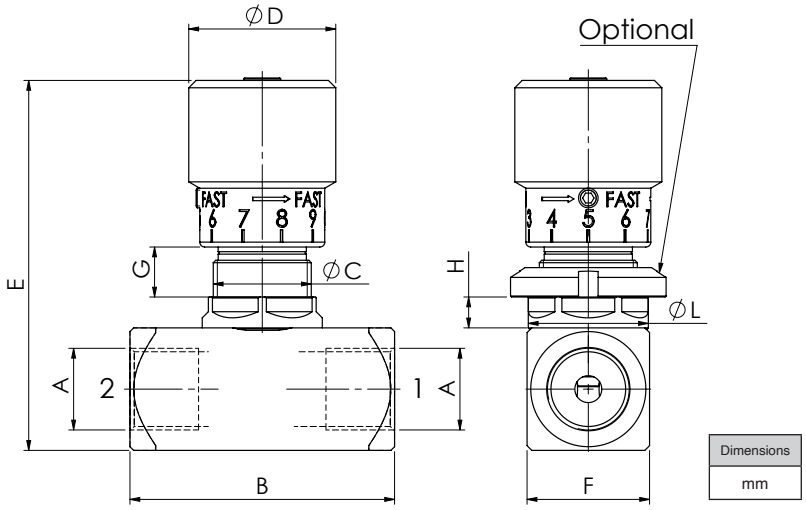

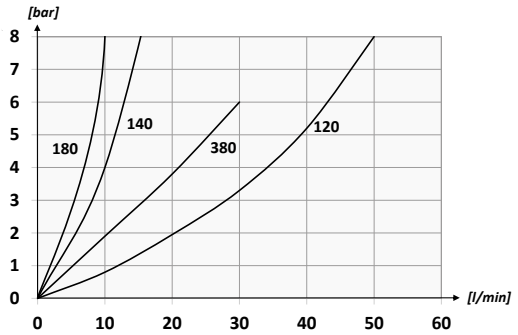

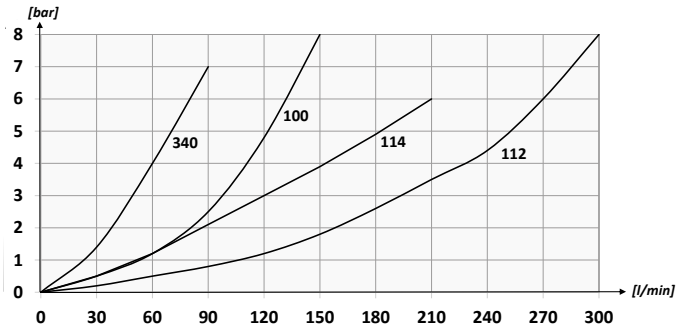

Type	A	Max. flow (lpm)	Max. pressure (bar)	B	C	D	E	F	G	H	L	Optional type	Approx weight (kg)
STBF140	BSP 1/4	15	400	54	M20x1	30	75	25	7.5	6	24.5	84100022	0.31
STBF380	BSP 3/8	30	400	54	M20x1	30	75	25	7.5	6	24.5	84100022	0.28
STBF120	BSP 1/2	50	400	64	M25x1.5	33	81	30	9	7	29.5	84100023	0.48
STBF340	BSP 3/4	80	400	81	M35x1.5	42	110	40	15.5	8	39.5	84100024	1.13
STBF100	BSP 1	150	400	102	M35x1.5	42	115	45	15.5	8	39.5	84100024	1.50

Ordering Chart

Part No.	Description	Size (BSP)	Max. flow (lpm)	Max. pressure (bar)
STBF-140	1/4" BSP BIDIRECTIONAL FLOW CONTROL VALVE	1/4	15	400
STBF-380	3/8" BSP BIDIRECTIONAL FLOW CONTROL VALVE	3/8	30	400
STBF-120	1/2" BSP BIDIRECTIONAL FLOW CONTROL VALVE	1/2	50	400
STBF-340	3/4" BSP BIDIRECTIONAL FLOW CONTROL VALVE	3/4	80	400
STBF-100	1" BSP BIDIRECTIONAL FLOW CONTROL VALVE	1	150	400

PRESSURE COMPENSATED FLOW CONTROL VALVES - VRC

Mineral oil	IS0 6743/4 (DIN 51524)
Oil viscosity	15-250 mm²/s (15 to 250 cSt)
Max contamination index with filter	IS0 4406:1999 Class 19/17/14

Oil temperature	-20°C to +80°C
Ambient temperature	-20°C to +50°C

A filter is necessary to protect the valve (advised filtration 15 µm)

Symbol

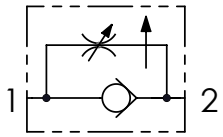

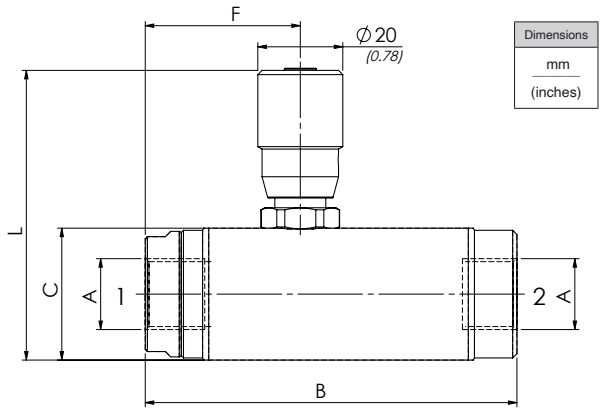

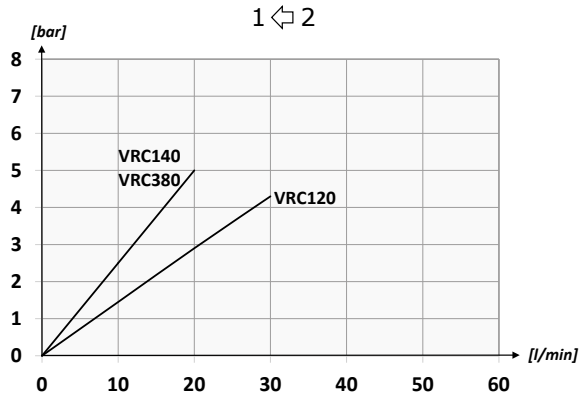

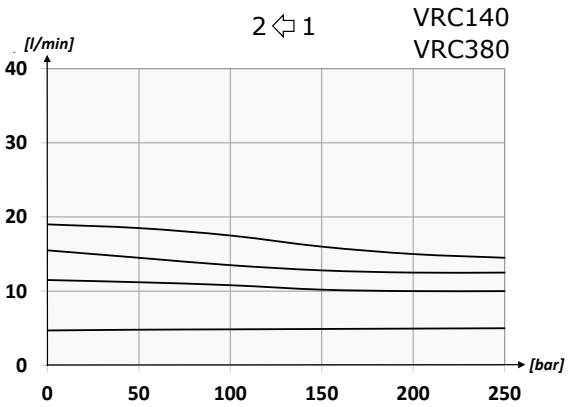

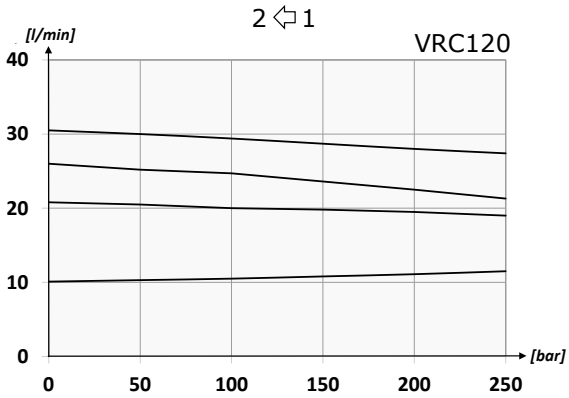

Type	A	Max. flow (lpm)	Max. pressure (bar)	B	C	F	L	Approx. weight (kg)
VRC140	BSP 1/4	10	250	87.5	31	36.5	68	0.51
VRC380	BSP 3/8	18	250	87.5	31	36.5	68	0.50
VRC120	BSP 1/2	33	250	107.5	36	46	73	0.76

Ordering Chart

Part No.	Description	Size (BSP)	Max. flow (lpm)	Max. pressure (bar)
VRC-140	1/4" BSP PRESSURE COMPENSATED FLOW CONTROL VALVE	1/4	10	250
VRC-380	3/8" BSP PRESSURE COMPENSATED FLOW CONTROL VALVE	3/8	18	250
VRC-120	1/2" BSP PRESSURE COMPENSATED FLOW CONTROL VALVE	1/2	33	250

Hydrastore
Hydraulic Systems & Components

DUAL OVER CENTRE VALVE - VBCD FOR OPEN CENTRE

Mineral oil	IS0 6743/4 (DIN 51524)
Oil viscosity	15-250 mm²/s (15 to 250 cSt)
Max contamination index with filter	IS0 4406:1999 Class 19/17/14

Oil temperature	-20°C to +80°C
Ambient temperature	-20°C to +50°C

A filter is necessary to protect the valve (advised filtration 15 µm)

Symbol

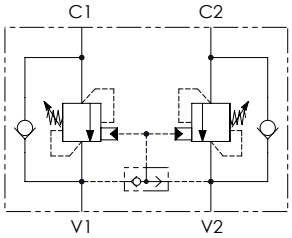

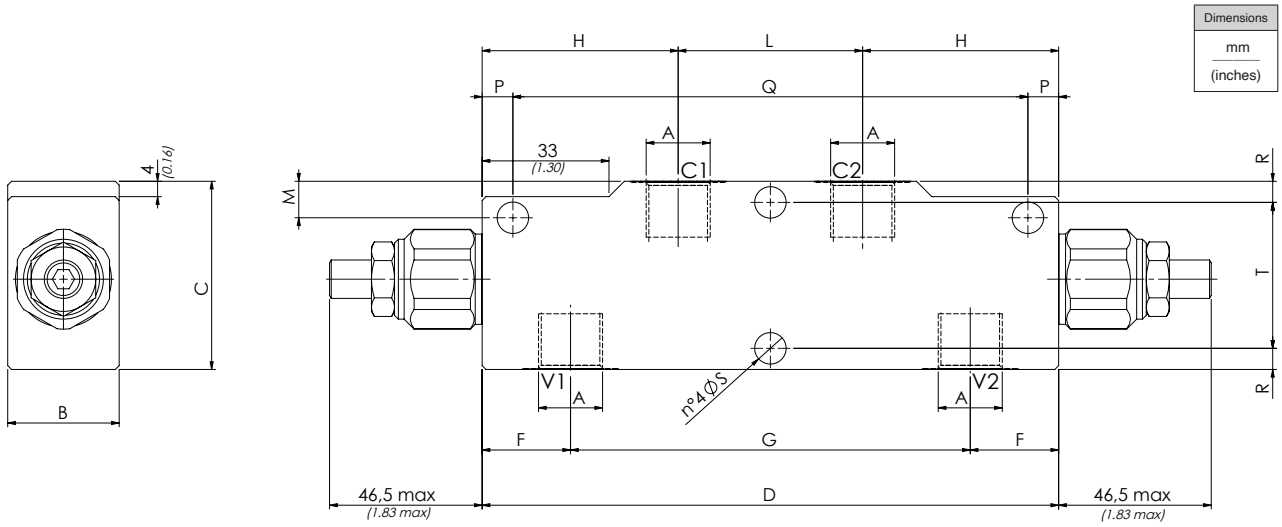

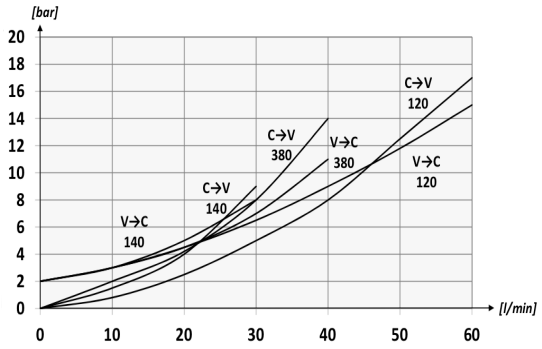

Note: Pressure range 60-350 bar
Pilot ratio 1:4.25
Adjustment 135 bar per turn

Note: Valves are supplied unset

Type	A	Max. flow (lpm)	Max. pressure (bar)	B	C	D	F	G	H	L	M	P	Q	R	S	T	Approx. weight (kg)
VBCD380	BSP 3/8	40	350	29	49	150	23	104	51	48	10	8	134	5.5	8.2	38	1.55
VBCD120	BSP 1/2	60	350	29	59	150	21	108	51	48	12	8	134	5.5	8.2	43	1.78

Ordering Chart

Part No.	Description	Size (BSP)	Max. flow (lpm)	Max. pressure (bar)
VBCD-380-2-S	3/8" BSP DUAL OVER CENTRE VALVE 60 - 350 BAR	3/8	40	350
VBCD-120-2-S	1/2" BPS DUAL OVER CENTRE VALVE 60 - 350 BAR	1/2	60	350

DUAL OVER CENTRE VALVE - VBCC FOR CLOSED CENTRE

Mineral oil	IS0 6743/4 (DIN 51524)
Oil viscosity	15-250 mm²/s (15 to 250 cSt)
Max contamination index with filter	IS0 4406:1999 Class 19/17/14

Oil temperature	-20°C to +80°C
Ambient temperature	-20°C to +50°C

A filter is necessary to protect the valve (advised filtration 15 µm)

Symbol

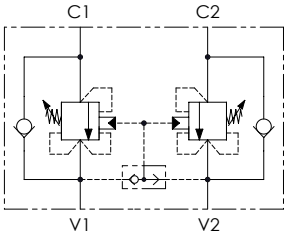

Dimensions
mm
(inches)

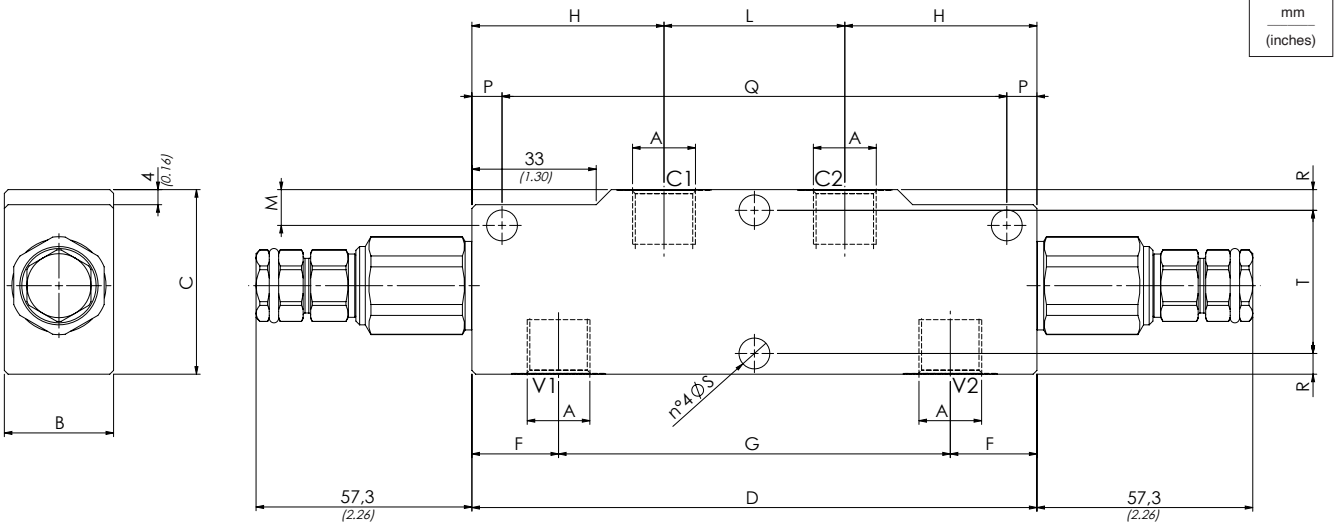

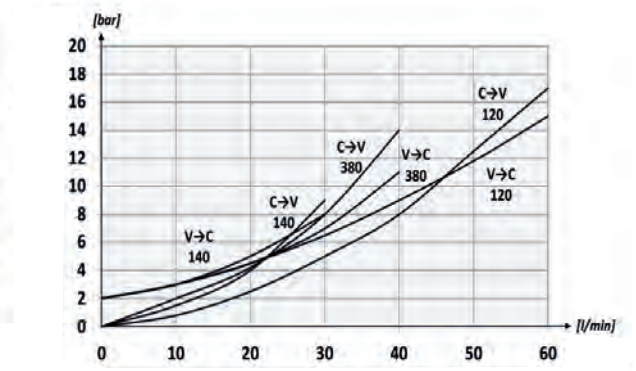

Note: Pressure range 30-210 bar
Pilot ratio 1:4.25
Adjustment 78 bar per turn

Note: Valves are supplied unset

Type	A	Max. flow (lpm)	Max. pressure (bar)	B	C	D	F	G	H	L	M	P	Q	R	S	T	Approx. weight (kg)
VBCC380	BSP 3/8	40	350	29	49	150	23	104	51	48	10	8	134	5.5	8.2	38	1.66
VBCC120	BSP 1/2	60	350	29	59	150	21	108	51	48	12	8	134	5.5	8.2	43	1.89

Ordering Chart

Part No.	Description	Size (BSP)	Max. flow (lpm)	Max. pressure (bar)
VBCC-380-1-S	3/8" BSP DUAL OVER CENTRE VALVE 30 to 210 BAR	3/8	40	350
VBCC-120-1-S	1/2" BSP DUAL OVER CENTRE VALVE 30 to 210 BAR	1/2	60	350

Hydrastore
Hydraulic Systems & Components

SINGLE OVER CENTRE VALVE - VBCL FOR OPEN CENTRE

Mineral oil	IS0 6743/4 (DIN 51524)
Oil viscosity	15-250 mm²/s (15 to 250 cSt)
Max contamination index with filter	IS0 4406:1999 Class 19/17/14

Oil temperature	-20°C to +80°C
Ambient temperature	-20°C to +50°C

A filter is necessary to protect the valve (advised filtration 15 µm)

Symbol

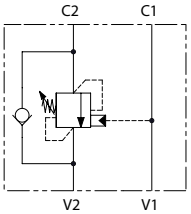

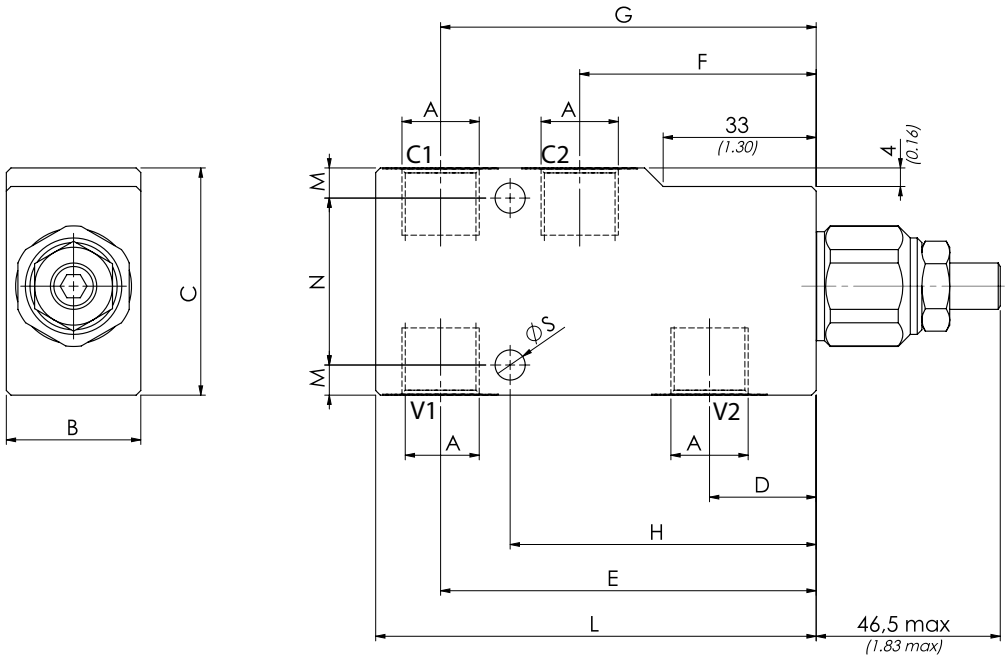

Dimensions
mm
(inches)

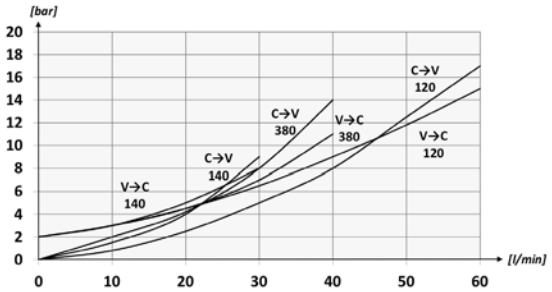

Note: Pressure range 30-210 bar
Pilot ratio 1:4.25
Adjustment 78 bar per turn

Note: Valves are supplied unset

Type	A	Max. flow (lpm)	Max. pressure (bar)	B	C	D	E	F	G	H	L	M	N	S	Approx. weight (kg)
VBCL380	BSP 3/8	40	350	29	49	23	58	51	81	66	95	6.5	36	6.5	0.92
VBCL120	BSP 1/2	60	350	29	59	21	63	51	84	67.5	100	9.5	40	6.5	1.09

Ordering Chart

Part No.	Description	Size (BSP)	Max. flow (lpm)	Max. pressure (bar)
VBCL-380-1-S	3/8" BSP SINGLE OVER CENTRE VALVE 30 to 210 BAR	3/8	40	350
VBCL-120-1-S	1/2" BSP SINGLE OVER CENTRE VALVE 30 to 210 BAR	1/2	60	350

SINGLE OVER CENTRE VALVE – VCCL FOR CLOSED CENTRE

Mineral oil	IS0 6743/4 (DIN 51524)
Oil viscosity	15-250 mm²/s (15 to 250 cSt)
Max contamination index with filter	IS0 4406:1999 Class 19/17/14

Oil temperature	-20°C to +80°C
Ambient temperature	-20°C to +50°C

A filter is necessary to protect the valve (advised filtration 15 µm)

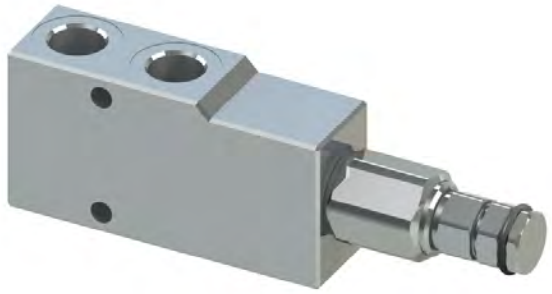

Symbol

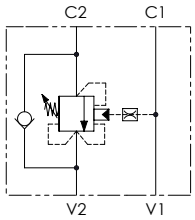

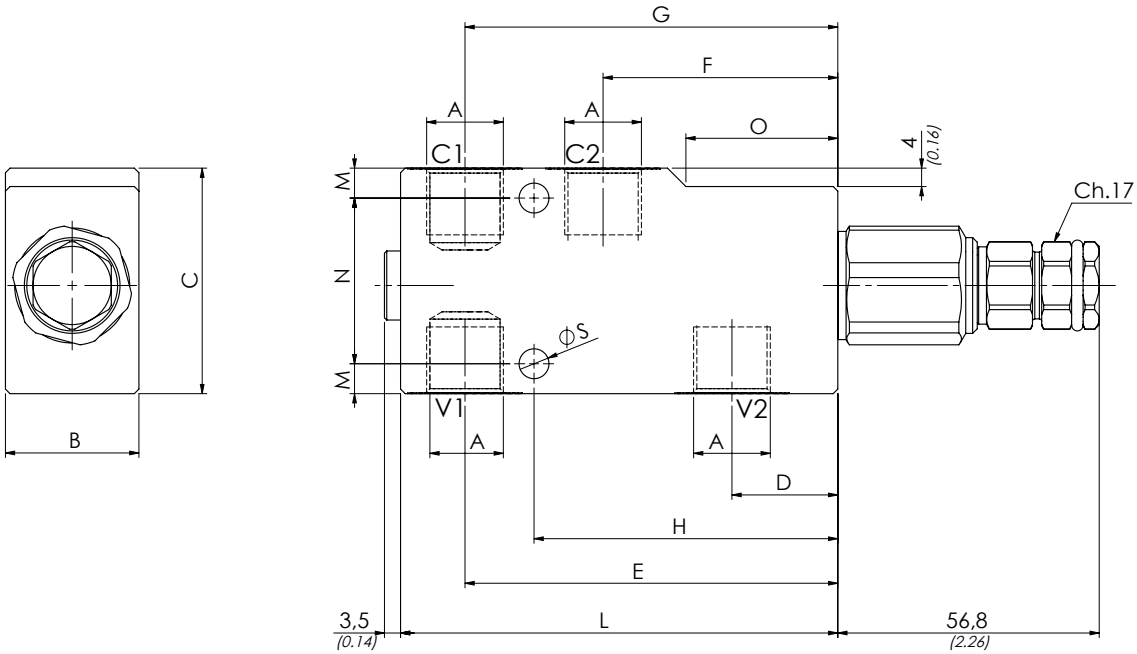

Dimensions
mm
(inches)

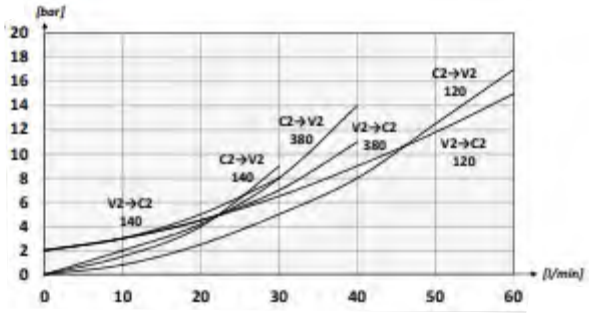

Note: Pressure range 30-210 bar
Pilot ratio 1:4.25
Adjustment 78 bar per turn

Note: Valves are supplied unset

Type	A	Max. flow (lpm)	Max. pressure (bar)	B	C	D	E	F	G	H	L	M	N	O	S	Approx. weight (kg)
VCCL380	BSP 3/8	40	350	29	49	23	81	51	81	66	95	6.5	36	33	6.5	0.98
VCCL120	BSP 1/2	60	350	29	59	21	84	51	84	67.5	100	9.5	40	33	6.5	1.15

Ordering Chart

Part No.	Description	Size (BSP)	Max. flow (lpm)	Max. pressure (bar)
VCCL-380-1-S	3/8" BSP SINGLE OVER CENTRE VALVE 30 to 210 BAR	3/8”	60	350
VCCL-120-1-S	1/2" BSP SINGLE OVER CENTRE VALVE 30 to 210 BAR	½”	40	350

SHUTTLE VALVE - VUSF

Mineral oil	IS0 6743/4 (DIN 51524)
Oil viscosity	15-250 mm²/s (15 to 250 cSt)
Max contamination index with filter	IS0 4406:1999 Class 19/17/14

Oil temperature	-20°C to +80°C
Ambient temperature	-20°C to +50°C

A filter is necessary to protect the valve (advised filtration 15 µm)

Symbol

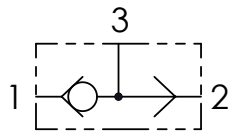

Dimensions
mm

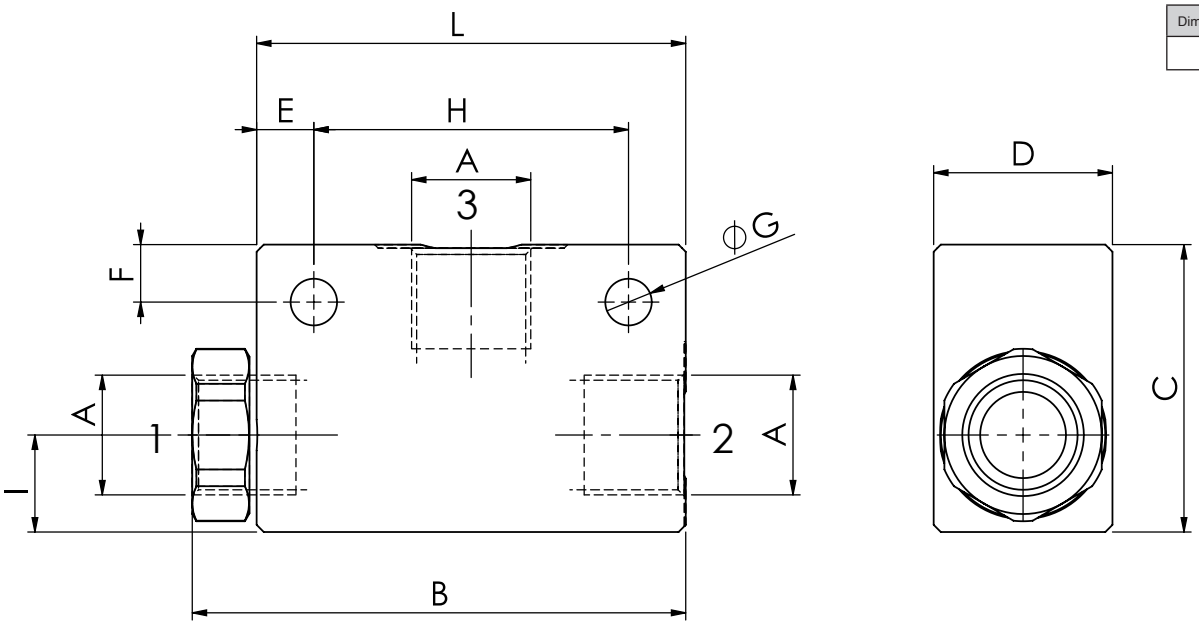

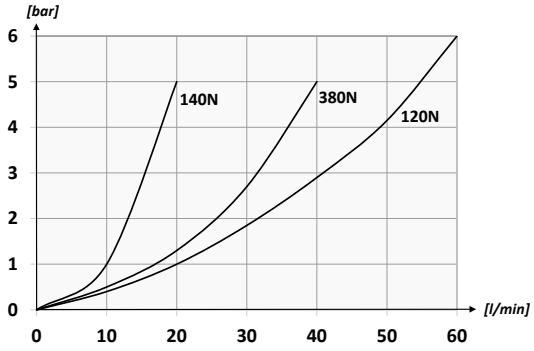

Type	A	Max. flow (lpm)	Max. pressure (bar)	B	C	D	E	F	G	H	I	L	Approx. weight (kg)
VUSF140N	BSP 1/4	20	350	57.3	35	25	9	8	6.5	34	12	52	0.29
VUSF380N	BSP 3/8	40	350	69	40	25	8	8	6.5	44	13.5	60	0.37
VUSF120N	BSP 1/2	60	350	73.8	50	35	10	10	8.5	45	18	65	0.71

Ordering Chart

Part No.	Description	Size (BSP)	Max. flow (lpm)	Max. pressure (bar)
VUSF-140-N	1/4" BSP LINE MOUNTED SHUTTLE VALVE	1/4	20	350
VUSF-380-N	3/8" BSP LINE MOUNTED SHUTTLE VALVE	3/8	40	350
VUSF-120-N	1/2" BSP LINE MOUNTED SHUTTLE VALVE	1/2	60	350

TWO WAY HIGH PRESSURE BALL VALVE - RAS2

Mineral oil	IS0 6743/4 (DIN 51524)
Oil viscosity	15-250 mm²/s (15 to 250 cSt)
Max contamination index with filter	IS0 4406:1999 Class 19/17/14

Oil temperature	-20°C to +80°C
Ambient temperature	-20°C to +50°C

A filter is necessary to protect the valve (advised filtration 15 µm)

Symbol

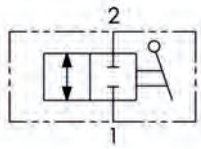

Dimensions
mm

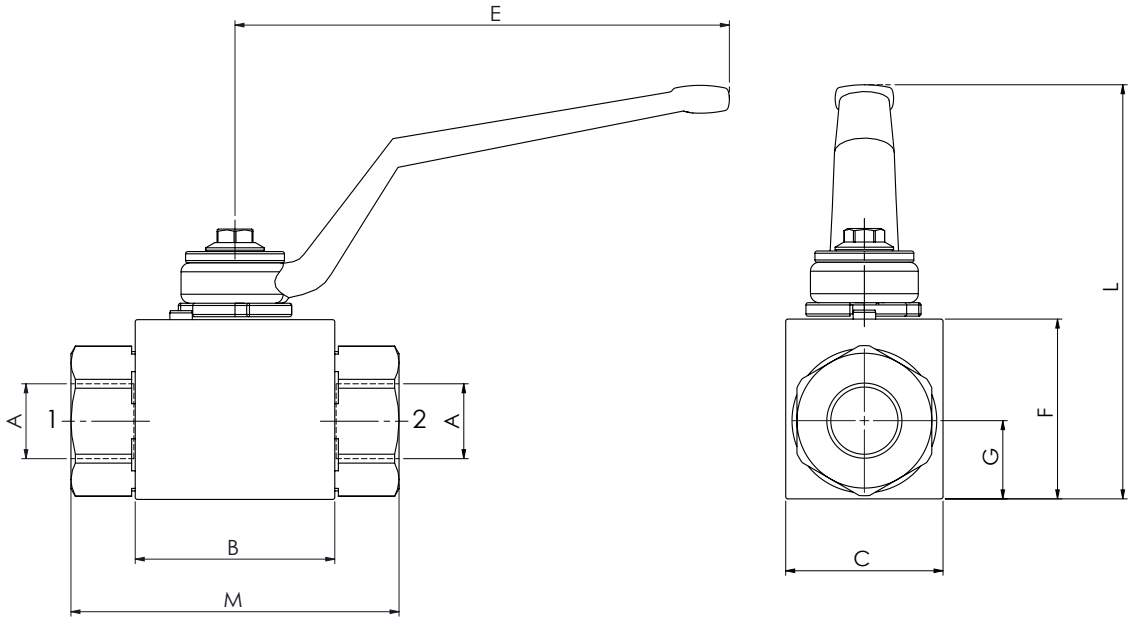

Type	A	Max. flow (lpm)	Max. pressure (bar)	B	C	E	F	G	H	L	M	R	S	Approx. weight (kg)
RAS2140	BSP 1/4	25	500	42.4	30	110	35	14.5	5.2	91.5	71	4.5	34	0.5
RAS2380	BSP 3/8	35	500	44.4	35	110	40	17.5	5.2	96.5	73	4.5	34	0.7
RAS2120	BSP 1/2	60	500	48.4	37	110	43	18	5.2	99.5	83	5	36	0.8
RAS2340	BSP 3/4	100	400	62.5	45	180	55	23.5	6.2	106.5	95	6	50	1.5
RAS2100	BSP 1	150	350	66.5	55	180	65	29.5	6.2	116.5	112	6	50	2.3
RAS2114	BSP 1 1/4	150	350	66.5	55	180	65	29.5	6.2	116.5	120	6	50	2.3

Ordering Chart

Part No.	Description	Size (BSP)	Max. flow (lpm)	Max. pressure (bar)
RAS2-140	1/4" BSP TWO WAY HIGH PRESSURE BALL VALVE	1/4	25	500
RAS2-380	3/8" BSP TWO WAY HIGH PRESSURE BALL VALVE	3/8	35	500
RAS2-120	1/2" BSP TWO WAY HIGH PRESSURE BALL VALVE	1/2	60	500
RAS2-340	3/4" BSP TWO WAY HIGH PRESSURE BALL VALVE	3/4	100	400
RAS2-100	1" BSP TWO WAY HIGH PRESSURE BALL VALVE	1	150	350
RAS2-114	1 1/4" BSP TWO WAY HIGH PRESSURE BALL VALVE	1 1/4	150	350

Hydrastore
Hydraulic Systems & Components

THREE WAY HIGH PRESSURE BALL VALVE - RAS3

Symbol

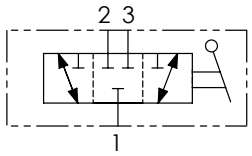

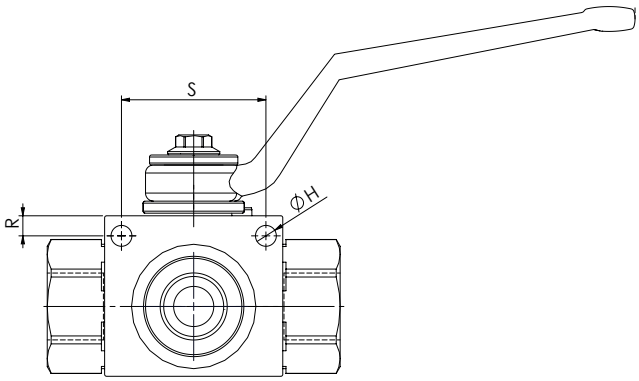

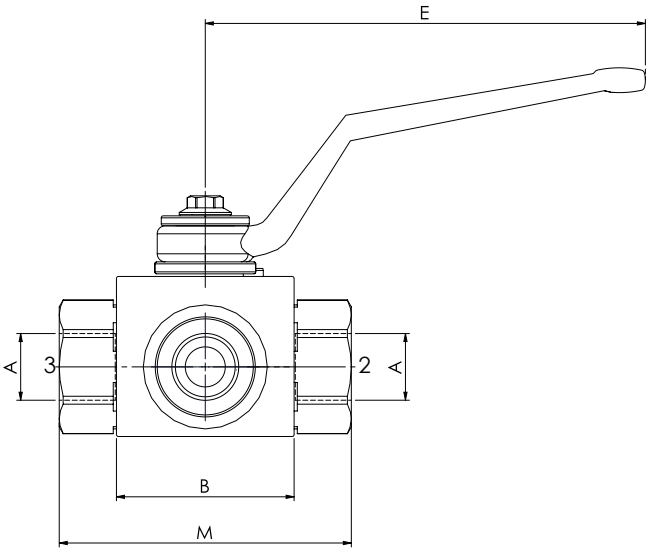

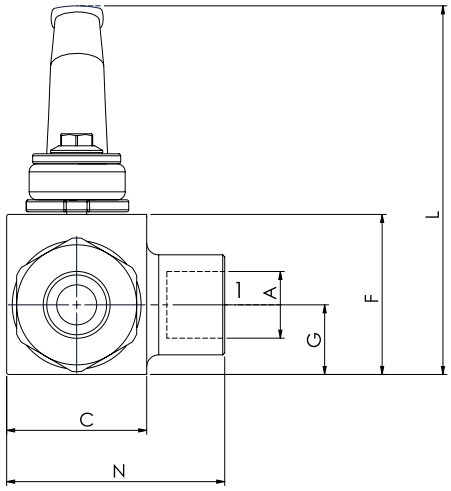

Dimensions
mm

Type	A	Max. flow (lpm)	Max. pressure (bar)	B	C	E	F	G	H	L	M	N	R	S	Approx. weight (kg)
RAS3140	BSP 1/4	25	400	42.4	30	110	35	14.5	5.2	91.5	71	48.5	4.5	34	0.6
RAS3380	BSP 3/8	35	400	44.4	35	110	40	17.5	5.2	96.5	73	54.5	5	36	0.7
RAS3120	BSP 1/2	60	350	48.4	37	110	43	18	5.2	99.5	83	58.5	6	50	0.8
RAS3340	BSP 3/4	100	350	62.5	45	180	55	23.5	6.2	106.5	95	75	6	50	1.6

Ordering Chart

Part No.	Description	Size (BSP)	Max. flow (lpm)	Max. pressure (bar)
RAS3-140	1/4" BSP THREE WAY HIGH PRESSURE BALL VALVE	1/4	25	400
RAS3-380	3/8" BSP THREE WAY HIGH PRESSURE BALL VALVE	3/8	35	400
RAS3-120	1/2" BSP THREE WAY HIGH PRESSURE BALL VALVE	1/2	60	350
RAS3-340	3/4" BSP THREE WAY HIGH PRESSURE BALL VALVE	3/4	100	350

PRESSURE REDUCING VALVE - D-DFPRP

OPERATION

The D-DFPRP in its steady state, allows flow to pass from (2) to (3), with the spring chamber constantly drained at (1). When a pre-determined pressure is reached at (3), the spool shifts to restrict input flow at (2), thereby reducing (restricting) flow. If valve and pressure at port (3) exceeds setting, spool shift to open passage at port (1), thereby regulating pressure at port (3) by relieving excess flow. This valve is ideal for secondary reduced pressure control in common hydraulic circuits. The valve offers smooth transition in response to load changes.

Symbol

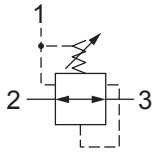

Specifications

Nom. Flow (lpm)	38
Max.pressure (bar)	7 to 210
Hydraulic Oil	General purpose hydraulic fluid
Viscosity Range	3 to 640 cSt
Filtration	ISO 18/16/13
Operating Temp.	-40 to 120˚C
Cartridge Torque	41 Nm
Cavity	DF10-3 (see cavity data page **CAV-DF10-3**)
Spare Seal Kit (Viton)	SK-DDFVHAA
Weight - Valve only	0.27 kg
Weight - Valve + Body	0.63 kg (alum) 1.30 kg (steel)

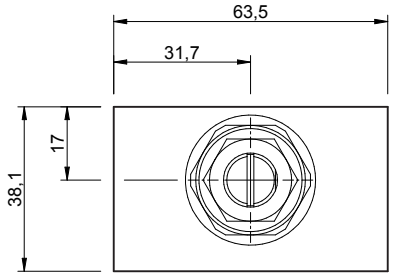

Dimensions
mm

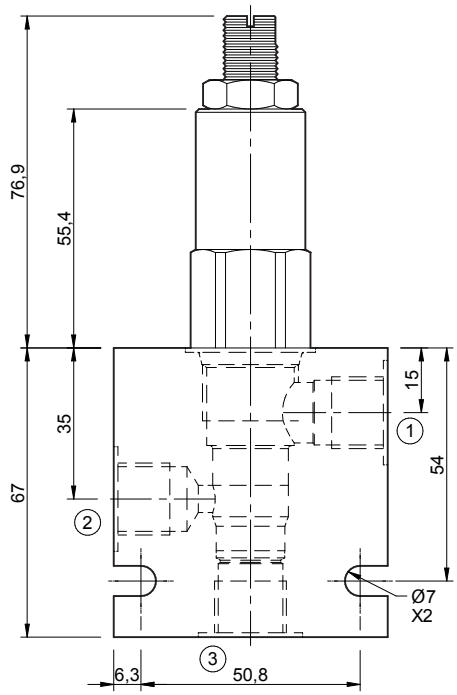

Performance

32 cSc / 38°C.

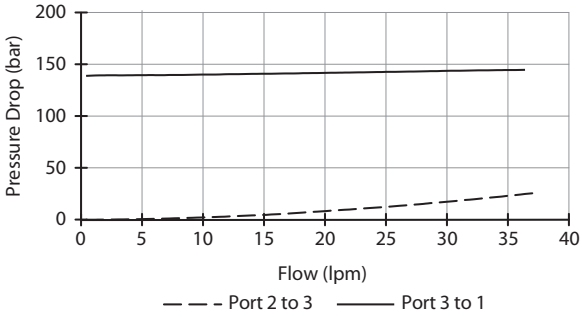

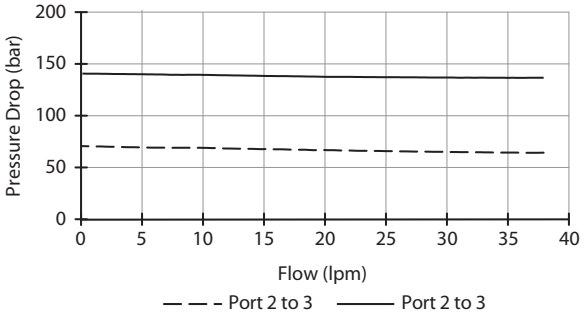

Note: Adjustment wheel available on request

Ordering Chart

Part No.	Description	Size (BSP)	Max. flow (lpm)	Max. pressure (bar)
D-DFPRP003000B3A	PRESSURE REDUCING VALVE 7 TO 210 BAR	3/8	38	210
D-DFPRP003000C3A	PRESSURE REDUCING VALVE 7 TO 210 BAR	1/2	38	210

FLOW DIVIDERS

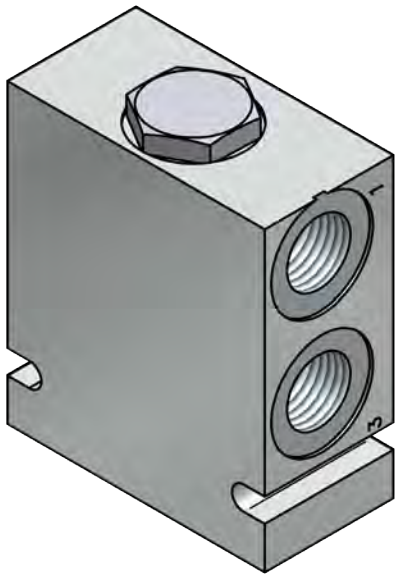

The flow dividers / combiners either divide flow into two equal parts, or combine the flow from 2 separate lines into a single, subject to the direction the oil passes through the valve.

In the dividing mode, the D-DGFDH will divert input flow from port (2) to ports (3) and (1), based on the ratio specified with a high degree of accuracy, regardless of operating pressure.
The D-DGFDH will combine input flows from ports (3) and (1), to port (2) by the same ratio.
Should circuit operation result in a blockage of either (3) or (1), the opposite port may also close under certain conditions. Should this potential exist, consult the factory.

Symbol

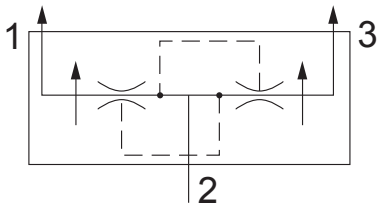

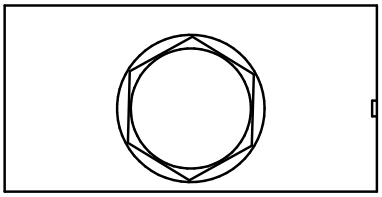

Dimensions
mm

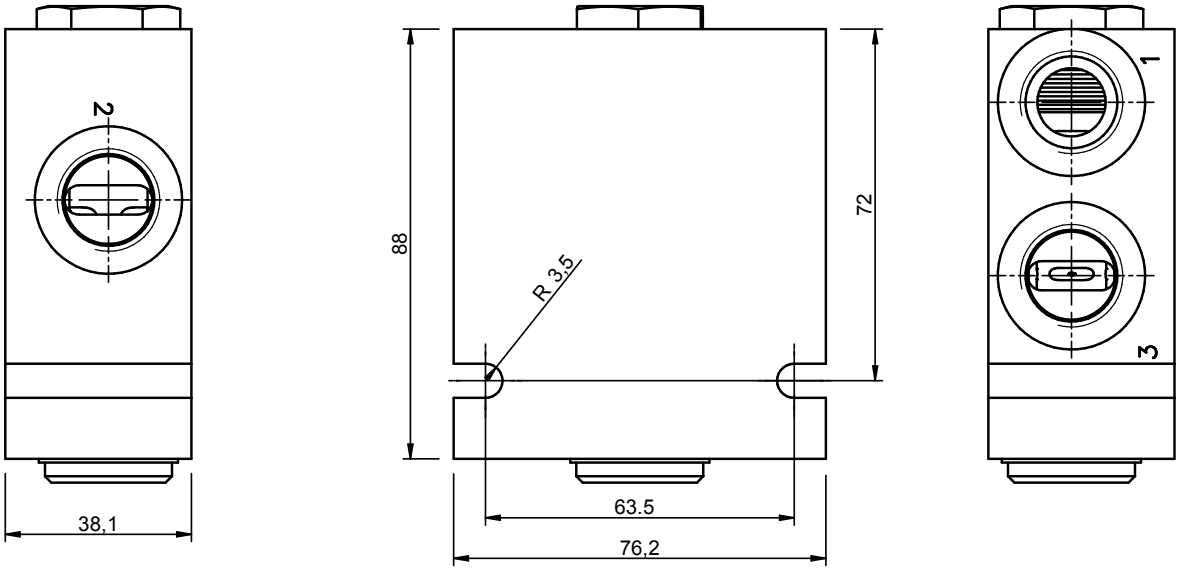

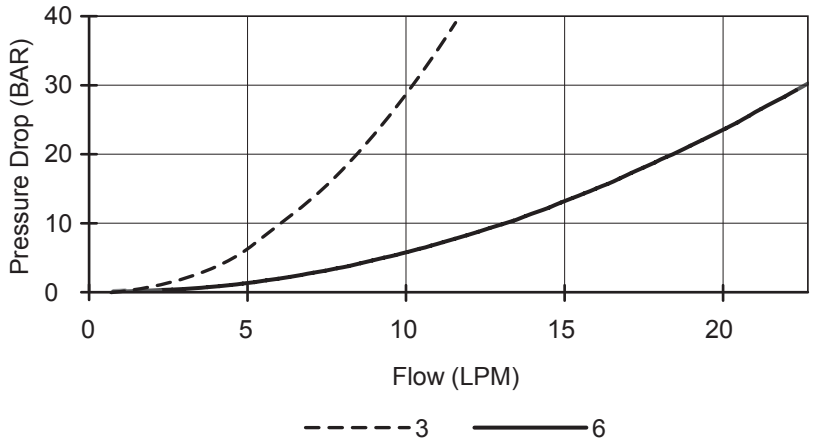

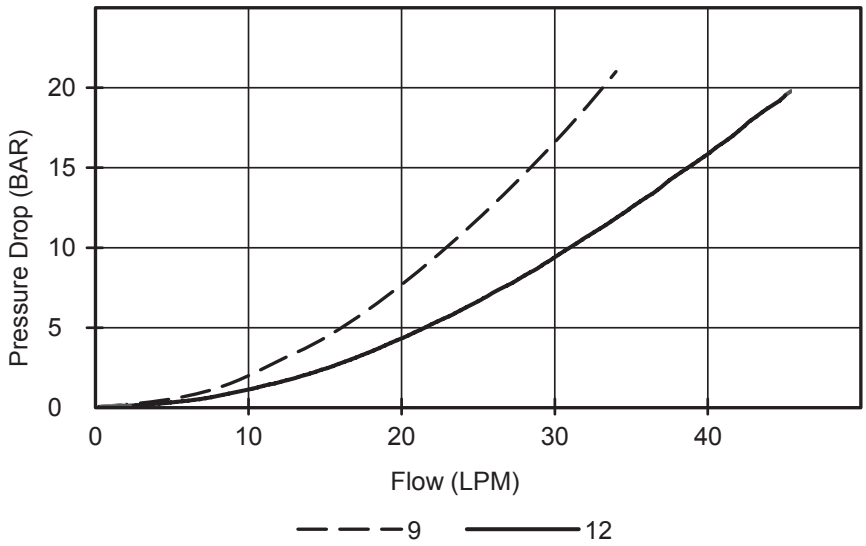

Note: Care must be taken to size the valve carefully to the flow rate(s) shown in the catalogue. This applies to inlet flow as well as amplified return flows.

Ordering Chart

Part No.	Description	Max. flow (lpm)	Max pressure (bar)
D-DGFDH005003B3A	50/50 FLOW DIVIDER COMBINER 3/8” BSP 8-11 LPM	11	240
D-DGFDH005006B3A	50/50 FLOW DIVIDER COMBINER 3/8” BSP 11-23 LPM	23	240
D-DGFDH005009B3A	50/50 FLOW DIVIDER COMBINER 3/8” BSP 23-34 LPM	34	240
D-DGFDH005012B3A	50/50 FLOW DIVIDER COMBINER 3/8” BSP 34-45 LPM	45	240

Hydrastore
Hydraulic Systems & Components

PRESSURE SEQUENCE VALVE - D-DFPWI

OPERATION

The D-DFPWI blocks flow at (3) and allows flow from (2) to (1). On attainment of a predetermined pressure at (3) the valve shifts to a allow flow from (3) to (2) and block flow at (1).

Adjustment

Turn ↻ to increase pressure.

Features

- Hardened parts for long life.
- Industry common cavity.

Symbol

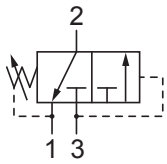

Specifications

Nom. Flow (lpm)	30
Max.pressure (bar)	210
Internal Leakage (32 cSt)	82 cc/min per path
Hydraulic Oil	General purpose hydraulic fluid
Viscosity Range	3 to 640 cSt
Filtration	ISO 18/16/13
Operating Temp.	-40 to 120˚C
Cartridge Torque	41 Nm
Cavity	DF10-3 (see cavity data page **CAV-DF10-3**)
Spare Seal Kit (Viton)	SK-DDFVHAA
Weight - Valve only	0.26 kg
Weight - Valve + Body	0.62 kg (alum) 1.29 kg (steel)

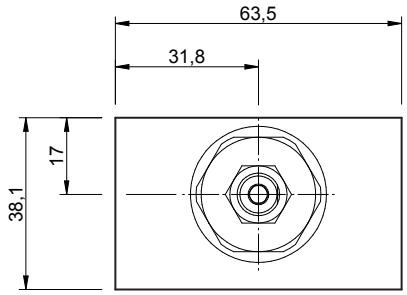

Dimensions
mm

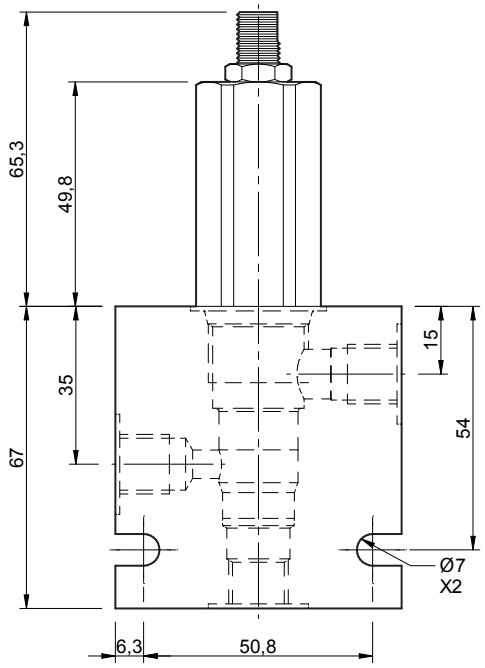

Performance

32 cSc / 38°C.

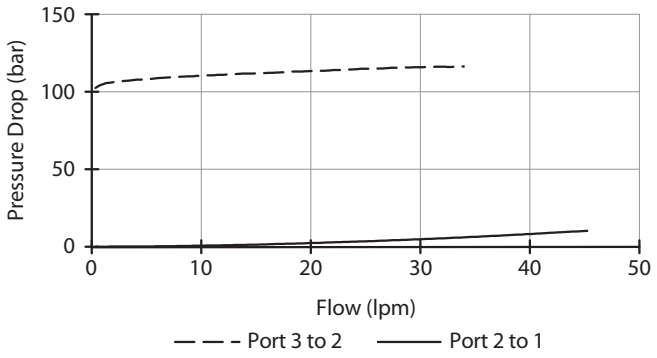

Ordering Chart

Part No.	Description	Size (BSP)	Max. flow (lpm)	Max. pressure (bar)
D-DFPWI001500B3A	PRESSURE SEQUENCE VALVE 29-103 BAR	3/8	30	210

PROPORTIONAL PRESSURE CONTROL - D-IPDAR43C

Up to 3.8 lpm

DESCRIPTION

Direct Acting Proportional, Pressure Reducing/ Relieving valve, Slip-in Type.

OPERATION

The D-IPDAR43C generates a variable pressure in response to a PWM (Pulse Width Modulated) current signal. With no current applied to the proportional solenoid, the inlet port 2 is blocked and the regulated port 3 is vented to port 1. As current is increased, fluid pressure is proportionally controlled at the regulated port 3. On attainment of proportionally determined pressure at 3, the cartridge shifts to block flow at 2, thereby regulating pressure at 3. In this mode, the valve also will relieve 3 to 1 at a variable value over the set reducing pressure.

Symbol

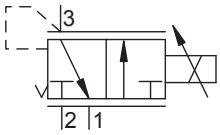

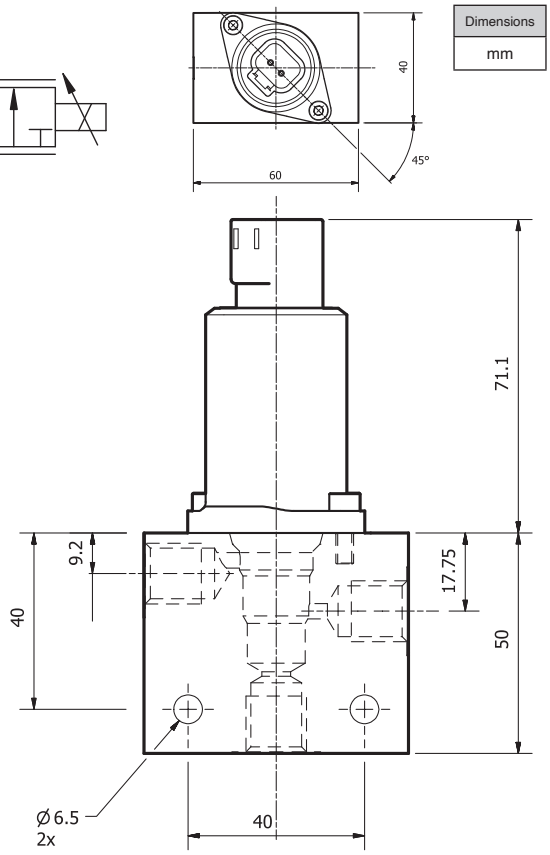

Specifications

Flow Range (lpm)	3.8 lpm @ 8 bar Delta P
Controlled Pressure range (bar)	0-25 bar / 0-30 bar (see graph)
Reduced Pressure Tolerance	+/- 5%
Max. Back-pressure at T port	20 bar
Internal Leakage	15ml/min. @ 35 bar inlet 35ml/min. @ 350 bar inlet
Hydraulic Oil	General purpose hydraulic fluid
Viscosity Range	3 to 640 cSt
Filtration	ISO 18/15/13
Operating Temp.	-25 to 90˚C
Flange Mounting Screws	M4x10 / torque 4Nm
Cavity	T043 (see cavity data page CAV-T043)
Weight - Valve only	0.25 kg

Performance

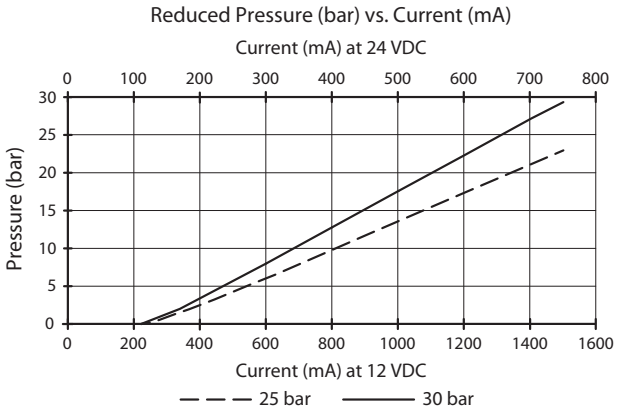

Note: Inlet pressure 350 bar available on request

Note: Valve is not supplied with a body, but bodies are available on request

Note: PWM driver is available on request

Coil Specifications

Current Supply	PWM (Pulse Width Modulation)
Rated Current Range	200 - 1500 mA (12 Volts) 100 - 750 mA (24 Volts)
PWM or Super-imposed Dither Frequency	100 - 200 Hz
Coil Resistance (12 vdc)	5.4 Ohm +/- 5% at 20°C
Coil Resistance (24 vdc)	22 Ohm +/- 5% at 20°C
Max.Power Consumption	12 Watt (20°C)
Protection Degree	IP67 according to IEC 529
Coil Termination	Deutsch-Integral DT04-2P Amp Junior Timer 84-9419

Ordering Chart

Part No.	Description	Max. flow (lpm)	Pressure range (bar)	Max. pressure (bar)
D-IPDAR43CIJ1L2500	PROPORTIONAL PRESSURE REDUCING VALVE 12VDC	3.8 lpm	0-25 bar	50
D-IPDAR43CIJ2L2500	PROPORTIONAL PRESSURE REDUCING VALVE 24VDC	3.8 lpm	0-25 bar	50

2-POSITION 2-WAY SOLENOID VALVE - D-DE-S2

Up to 240 bar - 55 lpm

OPERATION

This is a solenoid-operated 2-way poppet valve available in both normally closed and normally open configurations. In the normally closed configuration, the valve is typically used to lock a load in position at port 1. When energized, the poppet opens and releases the load, allowing flow to pass freely in both directions between ports 1 and 2. When de-energized, the valve allows free flow from port 2 to port 1. Conversely, in the normally open configuration, the valve allows free flow between ports 1 and 2. When energized, the valve closes, preventing flow from port 1 to 2, and allows flow to pass from 2 to 1. **Manual override options are available**

Symbol

DE-S2B

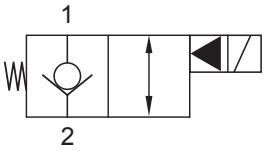

DE-S2D

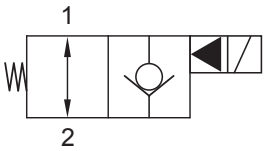

Features

- Hardened parts for long life.
- Efficient wet-armature construction.
- Cartridges are voltage interchangeable.
- Manual override options.
- Industry common cavity.

- Unitised, molded coil design.
- Continuous duty rated solenoid.
- Optional coil voltages and terminations.
- Optional “I” Coil: Weatherproof, Thermal, Shock, Immersion Safe.

Performance

32 cSt / 38°C.

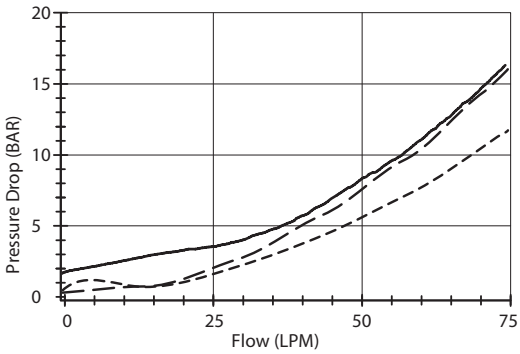

- - - - - Port 1 to 2 (eng) — — – Port 2 to 1 (eng)
——— Port 2 to 1 (de-eng)

Specifications

Nom. Flow (lpm)	55
Max.pressure (bar)	240
Internal Leakage (32 cSt)	0 to 0.25 cc/min at 240 bar
Hydraulic oil	General purpose hydraulic fluid
Viscosity Range	3 to 640 cSt
Filtration	ISO 18/16/13
Operating temp.	-40 to 120˚C
Voltage	DC / AC (see coil data page **Coil-D**)
Cartridge Torque	41 Nm
Coil Nut Torque	5 to 8 Nm
Cavity	DE10-2 (see cavity data page **CAV-DE10-2**)
Spare Seal Kit (Viton)	SK-DDEVHA
Weight - Cartridge only	0.12 kg
Weight - Cartridge + Coil	0.45 kg
Weight - Cartridge + Coil + Body	0.68 kg (alum) 1.10 kg (steel)

Note: Valves part numbers do not include manual override but they are available on request

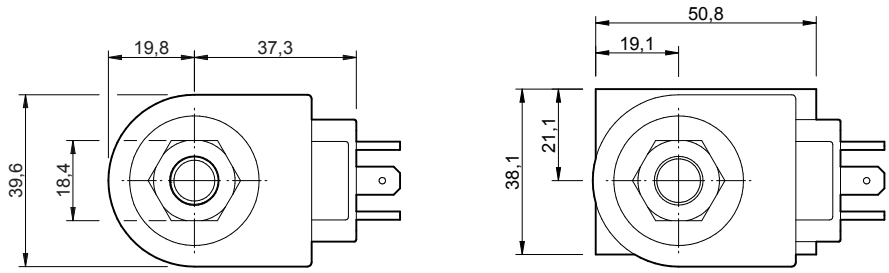

To Override

Detented Version
Pull & Twist

Non-Detented Version
Pull (spring return)

Coils can be fitted in any orientation.

Refer to data sheet Coil-D for coil options.

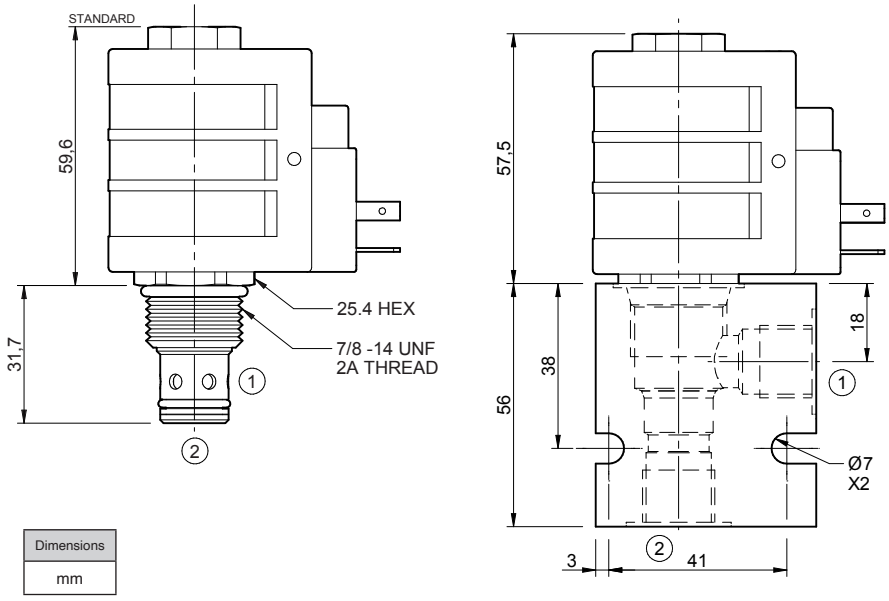

Ordering Chart

Part No.	Description	Size (BSP)	Max. flow (lpm)	Max. pressure (bar)
D-DES2B00HC12B2A	NORMALLY CLOSED SOLENOID OPERATED VALVE 12VDC	3/8	55	240
D-DES2B00HC24B2A	NORMALLY CLOSED SOLENOID OPERATED VALVE 24VDC	3/8	55	240
D-DES2B00HC11B2A	NORMALLY CLOSED SOLENOID OPERATED VALVE 110V50HZ	3/8	55	240
D-DES2D00HC12B2A	NORMALLY OPEN SOLENOID OPERATED VALVE 12VDC	3/8	55	240
D-DES2D00HC24B2A	NORMALLY OPEN SOLENOID OPERATED VALVE 24VDC	3/8	55	240
D-DES2D00HC11B2A	NORMALLY OPEN SOLENOID OPERATED VALVE 110V50HZ	3/8	55	240

Note: available in ½" body if required.

Hydrastore
Hydraulic Systems & Components

2-POSITION 2-WAY SOLENOID VALVE D-SJ-S2

Up to 240 bar - 115 lpm

OPERATION

This is a solenoid-operated 2-way poppet valve available in both normally closed and normally open configurations. In the normally closed configuration, the valve is typically used to lock a load in position at port 1. When energized, the poppet opens and releases the load, allowing flow to pass freely in both directions between ports 1 and 2. When de-energized, the valve allows free flow from port 2 to port 1. Conversely, in the normally open configuration, the valve allows free flow between ports 1 and 2. When energized, the valve closes, preventing flow from port 1 to 2, and allows flow to pass from 2 to 1. **Manual override options are available**

Symbol

SJ-S2B

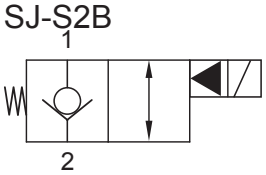

SJ-S2D

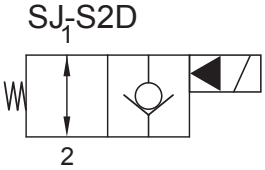

Features

- Hardened parts for long life.
- Efficient wet-armature construction.
- Cartridges are voltage interchangeable.
- Manual override options.
- Industry common cavity.

- Unitised, molded coil design.
- Continuous duty rated solenoid.
- Optional coil voltages and terminations.
- Optional “I” Coil: Weatherproof, Thermal, Shock, Immersion Safe.

Performance

32 cSt / 38°C.

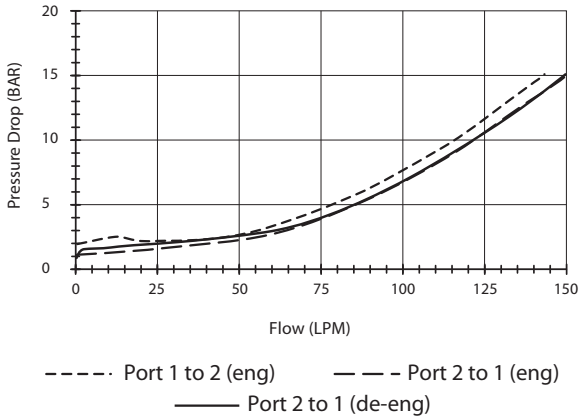

Specifications

Nom. Flow (lpm)	115
Max. pressure (bar)	240
Internal Leakage (32 cSt)	0 to 0.50 cc/min at 210 bar
Hydraulic oil	General purpose hydraulic fluid
Viscosity Range	3 to 640 cSt
Filtration	ISO 18/16/13
Operating temp.	-40 to 120˚C
Voltage	DC / AC (see coil data page **Coil-D**)
Cartridge Torque	122 Nm
Coil Nut Torque	5 to 8 Nm
Cavity	SJ16-2 (see cavity data page **CAV-SJ16-2**)
Spare Seal Kit (Viton)	SK-DSJVHA
Weight - Cartridge only	0.32 kg
Weight - Cartridge + Coil	0.65 kg
Weight - Cartridge + Coil + Body	1.23 kg (alum) 3.57 kg (steel)

Note: Valves part numbers do not include manual override but they are available on request

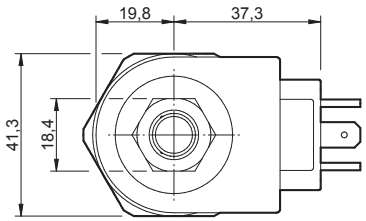

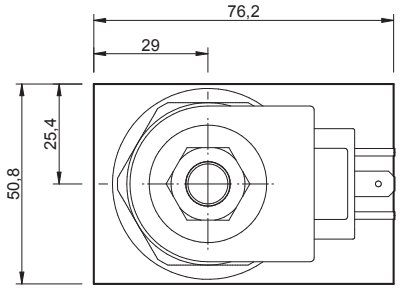

To Override

Detented Version
Pull & Twist

Non-Detented Version
Pull (spring return)

Coils can be fitted in any orientation.

Refer to data sheet Coil-D for coil options.

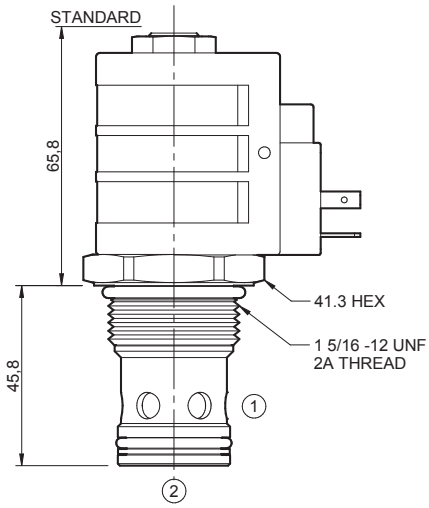

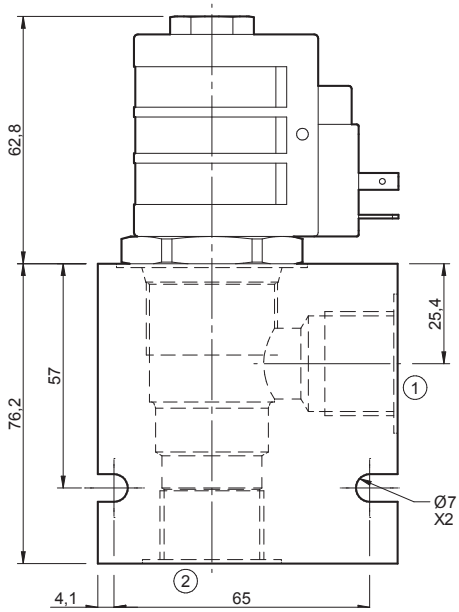

Dimensions
mm

Ordering Chart

Part No.	Description	Size (BSP)	Max. flow (lpm)	Max. pressure (bar)
D-SJS2B00HC12D2A	NORMALLY CLOSED SOLENOID OPERATED VALVE 12VDC	3/4	115	240
D-SJS2B00HC24D2A	NORMALLY CLOSED SOLENOID OPERATED VALVE 24VDC	3/4	115	240
D-SJS2B00HC11D2A	NORMALLY CLOSED SOLENOID OPERATED VALVE 110V50HZ	3/4	115	240
D-SJS2D00HC12D2A	NORMALLY OPEN SOLENOID OPERATED VALVE 12VDC	3/4	115	240
D-SJS2D00HC24D2A	NORMALLY OPEN SOLENOID OPERATED VALVE 24VDC	3/4	115	240
D-SJS2D00HC11D2A	NORMALLY OPEN SOLENOID OPERATED VALVE 110V50HZ	3/4	115	240

Hydrastore
Hydraulic Systems & Components

2-POSITION 3-WAY SOLENOID DIVERTER VALVE - DFS3A

Up to 210 bar - 38 lpm

OPERATION

This is a solenoid operated 3 way 2 position directional spool valve which can be used in a variety of ways to suit the desired control circuit. **Manual override options available.**

Common lift/lower valve where load holding is not required. For higher pressures see D-HFS3A.

Symbol

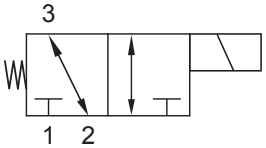

Features

- Hardened parts for long life.
- Efficient wet-armature construction.
- Cartridges are voltage interchangeable.
- Manual override options.
- Industry common cavity.
- Unitised, molded coil design.
- Continuous duty rated solenoid.
- Optional coil voltages and terminations.
- Optional “I” Coil: Weatherproof, Thermal, Shock, Immersion Safe.

Performance

32 cSt / 38°C.

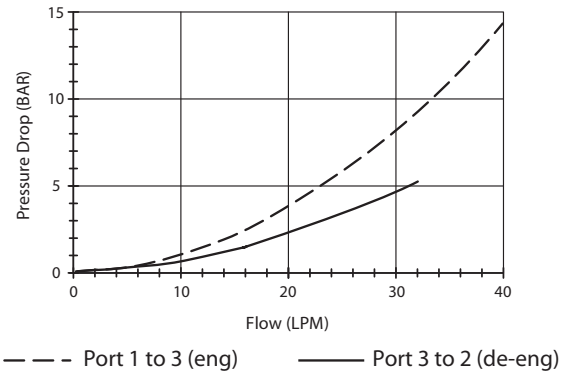

Specifications

Nom. Flow (lpm)	38
Max. pressure (bar)	210
Internal Leakage (32 cSt)	82 cc/min at 210 bar
Hydraulic oil	General purpose hydraulic fluid
Viscosity Range	3 to 640 cSt
Filtration	ISO 18/16/13
Operating temp.	-40 to 120˚C
Voltage	DC / AC (see coil data page **Coil-D**)
Cartridge Torque	41 Nm
Coil Nut Torque	5 to 8 Nm
Cavity	DF10-3 (see cavity data page **CAV-DF10-3**)
Spare Seal Kit (Viton)	SK-DDFVDD
Weight - Cartridge only	0.12 kg
Weight - Cartridge + Coil	0.45 kg
Weight - Cartridge + Coil + Body	0.82 kg (alum) 1.51 kg (steel)

Note: Valves part numbers do not include manual override but they are available on request

Note: When operated at 210 bar and ported into 3. the valve flow must not exceed 17 lpm.

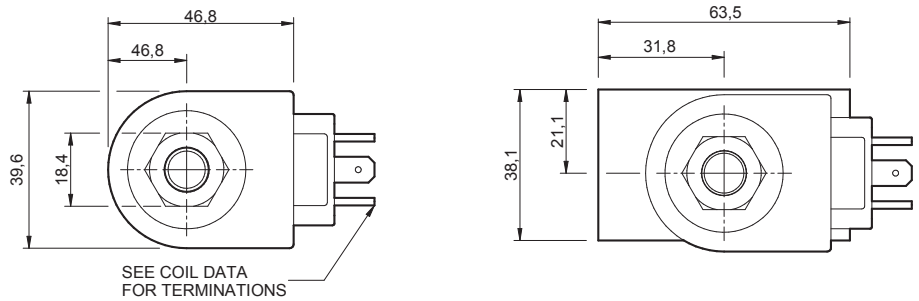

To Override

Detented Version
Pull & Twist

Non-Detented Version
Pull (spring return)

Coils can be fitted in any orientation.

Refer to data sheet Coil-D for coil options.

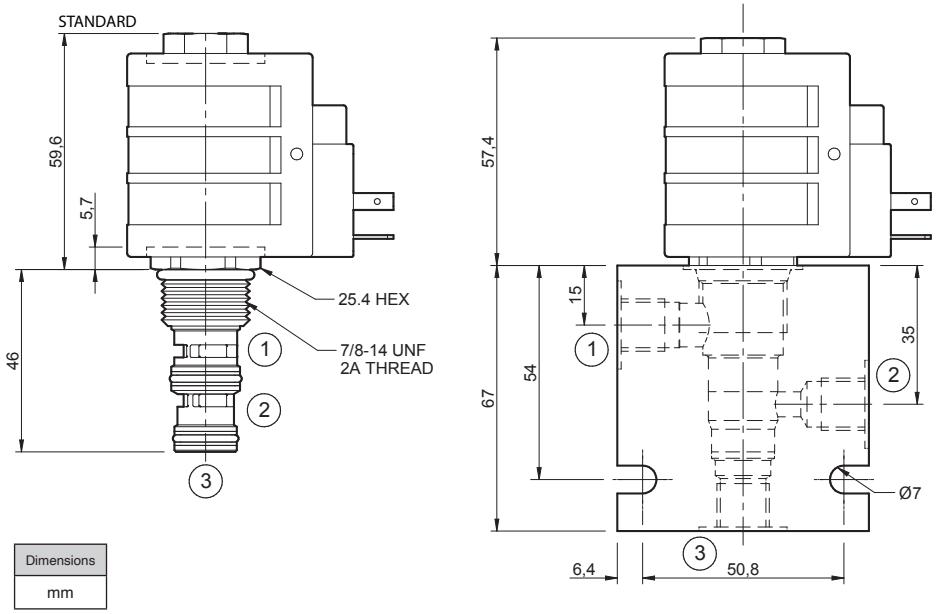

Ordering Chart

Part No.	Description	Size (BSP)	Max. flow (lpm)	Max. pressure (bar)
D-DFS3A00HC12B3A	2-POSITION 3-WAY SOLENOID DIVERTER VALVE 12VDC	3/8	38	210
D-DFS3A00HC24B3A	2-POSITION 3-WAY SOLENOID DIVERTER VALVE 24VDC	3/8	38	210
D-DFS3A00HC11B3A	2-POSITION 3-WAY SOLENOID DIVERTER VALVE 110V50HZ	3/8	38	210

Note: available in ½" body if required.

FLOW DIVERTER – IDF4

IDF4 flow diverters are 4 ways 3 positions directional valves with lever operation. Available in open centre or closed centre versions with BSP ports from 3/8 to 3/4.
The external body is made of cast iron and painted.

Mineral oil	IS0 6743/4 (DIN 51524)
Oil viscosity	15-250 mm²/s (15 to 250 cSt)
Max contamination index with filter	IS0 4406:1999 Class 19/17/14

Oil temperature	-20°C to +80°C
Ambient temperature	-20°C to +50°C

A filter is necessary to protect the valve (advised filtration 15 µm)

Max leakage	7 drops-min 2900 PSI

Symbol

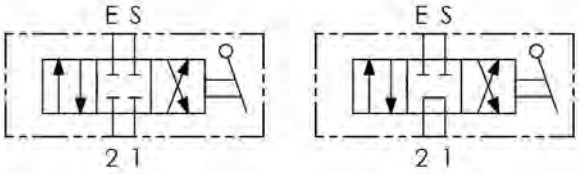

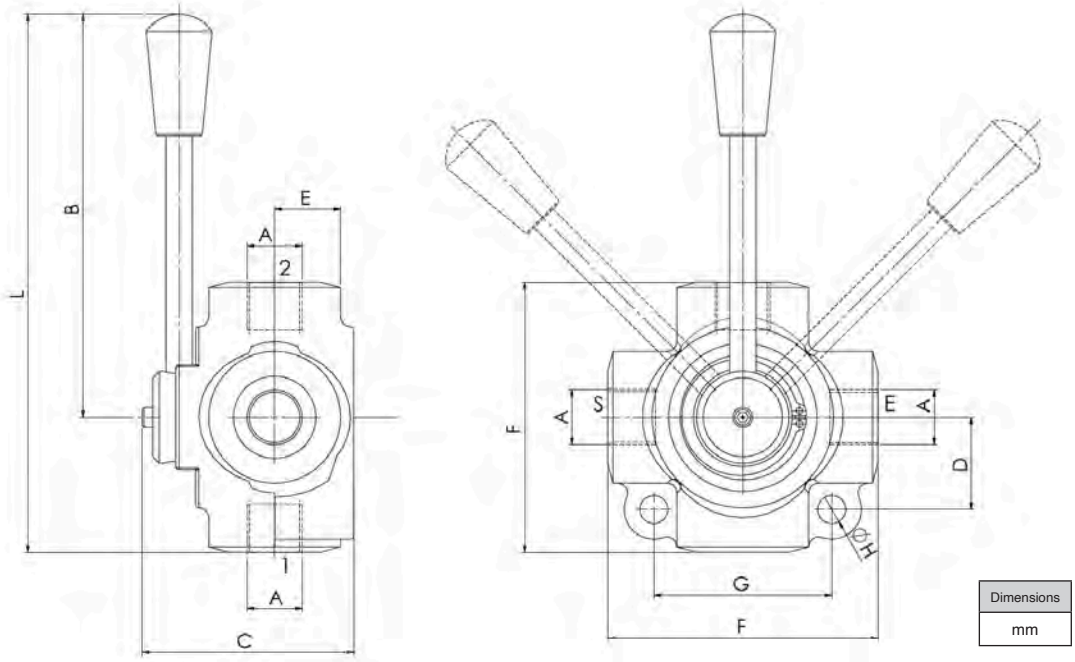

Type	A	B	C	D	E	F	G	H	L	Approx weight kg
IDF4380	BSPP 3/8	115	63	28	24	80	54	8.5	155	1.3
IDF4120	BSPP 1/2						74			1.87
IDF4340	BSPP 3/4							10.5	162	2.8

Ordering Chart

Part no.	Description	Max flow l/min	Max pressure bar
IDF4380A	3/8 BSP 4-WAY FLOW DIVERTER - CLOSED CENTRE	60	350
IDF4120A	1/2 BSP 4-WAY FLOW DIVERTER - CLOSED CENTRE	90	350
IDF4340A	3/4 BSP 4-WAY FLOW DIVERTER - CLOSED CENTRE	120	350
IDF4380B	3/8 BSP 4-WAY FLOW DIVERTER - OPEN CENTRE	60	350
IDF4120B	1/2 BSP 4-WAY FLOW DIVERTER - OPEN CENTRE	90	350
IDF4340B	3/4 BSP 4-WAY FLOW DIVERTER - OPEN CENTRE	120	350

Circuit Savers

REDUCE FLOW & PRESSURE ON ATTACHMENT APPLICATIONS	96
SINGLE ACTING LIFT BLOCK - LIFT, CHECK & DUMP	97
DUAL SEQUENCE CONTROL ASSEMBLY	98
LINE MOUNTED UNLOADER RELIEF MODULE & MULTI FUNCTIONAL MANIFOLD	99
DUAL OVERCENTRE C/W CROSS LINE RELIEF & BRAKE RELEASE SHUTTLE	100
PROPORTIONAL PRESSURE COMPENSATED PRIORITY FLOW CONTROL	101
MULTI STATION PILOT CONTROL ASSEMBLY	102
CYLINDER UNI-DIRECTION LOCK VALVE	104
CYLINDER BI-DIRECTION LOCK VALVE	105
REGENERATIVE CONTROL LINE MOUNTED, CETOP 5	106
PRESSURE REDUCER WITH REVERSE FLOW CHECK	107
HOT OIL SHUTTLE ASSEMBLY	108

Hydrastore
Hydraulic Systems & Components

REDUCE FLOW & PRESSURE ON ATTACHMENT APPLICATIONS - DUAL PRESSURE COMPENSATED FLOW & PRESSURE CONTROL MANIFOLD

FEATURES

- Steel (zinc plated) or Aluminium (anodised) material options
- Optional port positions
- Fixed setting, no externally adjustable valves
- Large range of priority flow ranges available
- Wide pressure range
- Compact, efficient design
- Up to 170 Lpm inlet (120 Lpm max. bypass).

DESCRIPTION

Ideal for various applications where pressure compensated speed control of an actuator in both directions is required. These controls offer meter in priority flow control with relief protection in both directions. Designed to accept a high input flow, the controls use a fixed orifice with compensator to limit the maximum priority flow supplied to the actuator regardless of load variations. Excess flow is returned to tank via the opposite service return line. A relief valve sensing on each priority output and relieving to the opposite service return line provides system relief protection. High performance check valves on each side of the circuit allow return flow from the actuator to pass back to tank with minimal loss.

SCHEMATIC

RF-3994

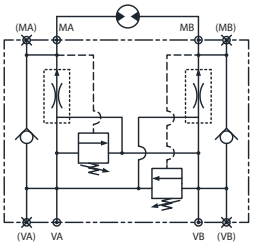

Dimensions [mm]

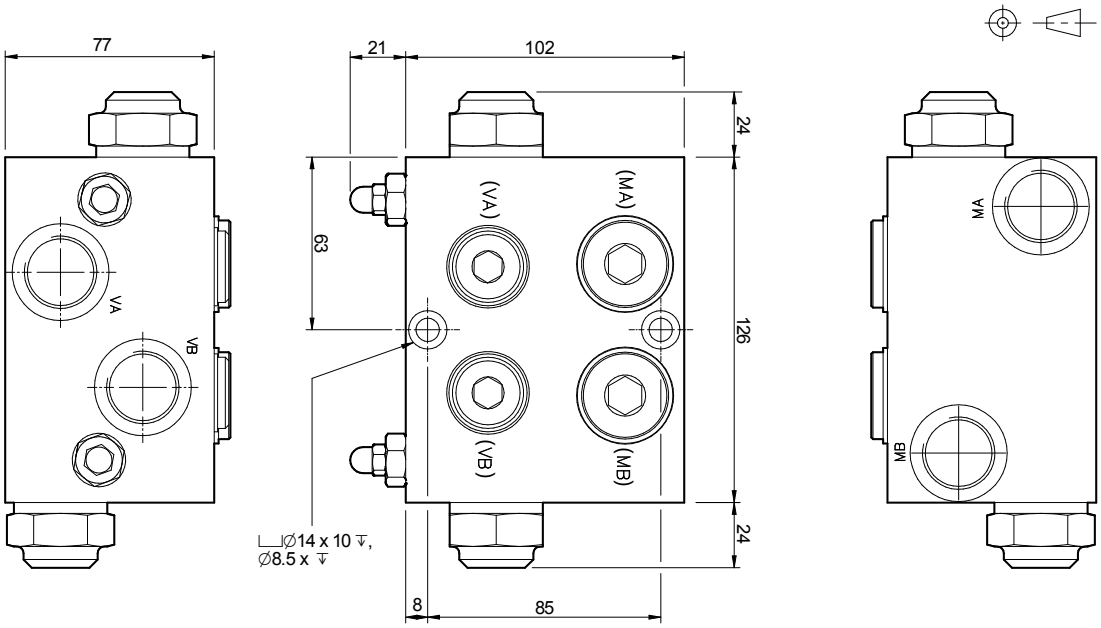

Ports

VA,VB,MA,MB = G.3/4

Alternative Ports

(VA), (VB) = G.1/2

(MA), (MB) = G.3/4

Ordering Chart

Part No.	Description	Max. flow (lpm)	Max. pressure (bar)
RF3994-30302121A	PRESSURE COMP FLOW CONTROL + RELIEF - 3/4" BSP	30	210
RF3994-30303535S	PRESSURE COMP FLOW CONTROL + RELIEF - 3/4" BSP	30	350
RF3994-80802121A	PRESSURE COMP FLOW CONTROL + RELIEF - 3/4" BSP	80	210
RF3994-80803535S	PRESSURE COMP FLOW CONTROL + RELIEF - 3/4" BSP	80	350

Other flow settings available on request

SINGLE ACTING LIFT BLOCK - LIFT, CHECK & DUMP

All aluminium (anodised)

Up to 240 bar - Up to 48 lpm

DESCRIPTION

These valves provide the control functions of 'raise', 'positive hold' and 'lower' (at a controlled speed) for lift applications using single acting cylinders such as scissor lifts, access platforms, etc. A pressure relief valve prevents peak circuit pressures.

Raise - Hold - Solenoid Lower (single speed)

SCHEMATIC

RF-03

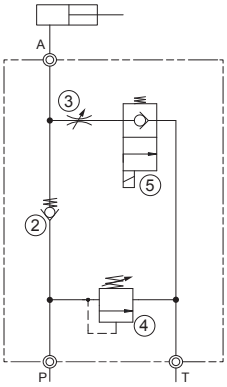

Specifications

Port Size (BSP)	3/8"
Nom. Flow (lpm)	48
Max. Pressure (bar)	240
Cartridge Material	Steel
Viscosity Range	3 to 647 cSt
Filtration	ISO 18/16/13
Seals	Nitrile/Viton
Response Time	30-45 ms
Body Material	Aluminium/Steel
Hydraulic Oil	General Purpose Hydraulic Fluid
Operating Temperature	-40˚C to + 120˚C
Voltage	DC and AC

Dimensions [mm]

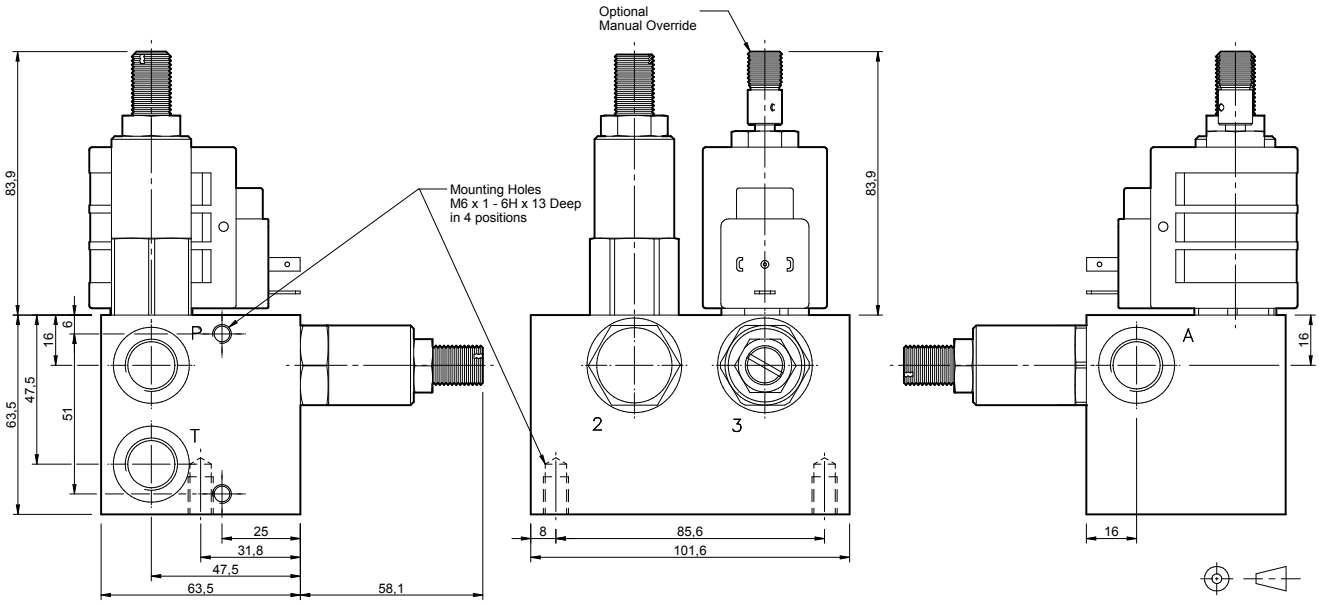

Ordering Chart

Part No.	Description	Max. flow (lpm)	Pressure range (bar)
RF03-200HC12	3/8" BSP LIFT BLOCK - SOLENOID OPERATED 12VDC	48	14-105
RF03-200HC24	3/8" BSP LIFT BLOCK - SOLENOID OPERATED 24VDC	48	14-105
RF03-200HC11	3/8" BSP LIFT BLOCK - SOLENOID OPERATED 110V50HZ	48	14-105
RF03-200HC23	3/8" BSP LIFT BLOCK - SOLENOID OPERATED 240V50HZ	48	14-105
RF03-300HC12	3/8" BSP LIFT BLOCK - SOLENOID OPERATED 12VDC	48	105-210
RF03-300HC24	3/8" BSP LIFT BLOCK - SOLENOID OPERATED 24VDC	48	105-210
RF03-300HC11	3/8" BSP LIFT BLOCK - SOLENOID OPERATED 110V50HZ	48	105-210
RF03-300HC23	3/8" BSP LIFT BLOCK - SOLENOID OPERATED 230V50HZ	48	105-210

Note: Non-compensated lower

Note: Manifold is aluminium.

Note: Manual overide for sol. Valve available on request.

DUAL SEQUENCE CONTROL ASSEMBLY

DESCRIPTION

This assembly is designed for sequencing of double acting cylinder applications, where one cylinder must extend/retract before a second cylinder moves.

In the first part of the cycle, oil flows into V1 and out of C1A until cylinder C1 is extended. Return flow from the opposite side of the cylinder, free flows through check valve 4 and out of V2. Sequence valve 1 then opens at a set pressure allowing flow out of port C2B, extending cylinder C2. This operation then also works in the same principle when oil flow is supplied in port V2.

A compact design allows this manifold control to easily integrate into many hydraulic systems negating the need for multiple line mounted valves, associated pipework and assembly time whilst also reducing potential leak points.

FEATURES

- Aluminum body (Anodised)
- Adjustment range 50 - 220 bar (other ranges available upon request)
- Atmospherically vented sequence valves are used and are immune to system back pressures
- Assembly weight: Aluminium 1.62 Kg
- Seal Kit: SK-RF3896

SCHEMATIC
RF-3896

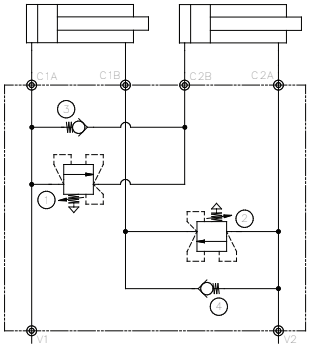

Dimensions [mm]

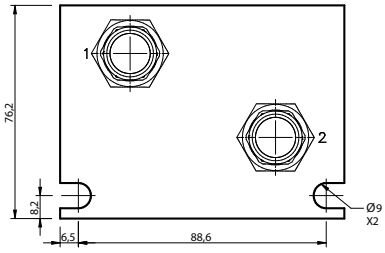

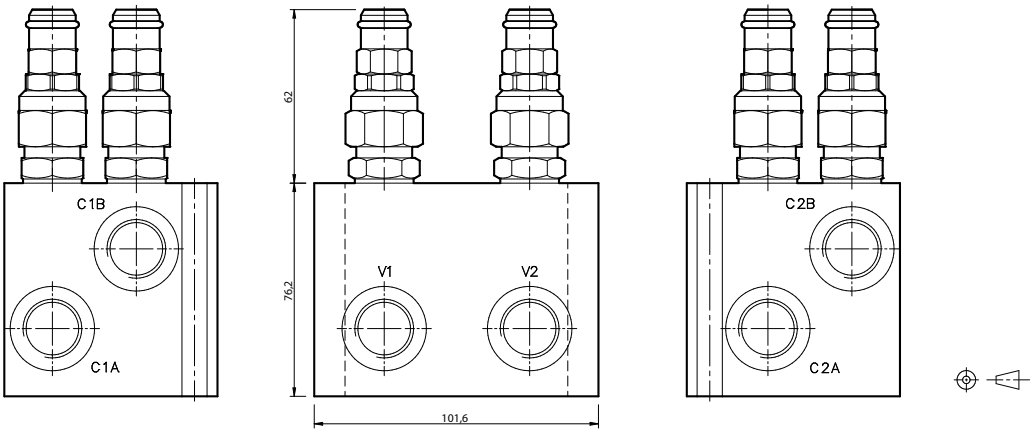

Ordering Chart

Part No.	Description	Max. flow (lpm)	Max. pressure (bar)
RF3896-1010A	DUAL SEQUENCE CONTROL ASSEMBLY- 1/2" BSP	40	350

Note: 1/4 BSP version available on request

LINE MOUNTED UNLOADER RELIEF MODULE & MULTI FUNCTIONAL MANIFOLD

Aluminium (anodised)

DESCRIPTION

In this configuration the assembly provides line mounted unloader (dump valve) and relief function. Two valve cavities are teed across the lines in parallel and these cavities can be fitted with cartridges from a standard range of two way, size 10 valves. Various functions can be achieved, from speed (flow) & load (pressure) control or anti-cavitation.

SCHEMATICS

RF-232

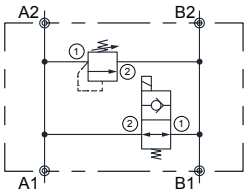

FEATURES

- Multi-function capability.
- Compact and efficient design.
- Various options, seals, overrides, pressure settings etc..

Dimensions [mm]

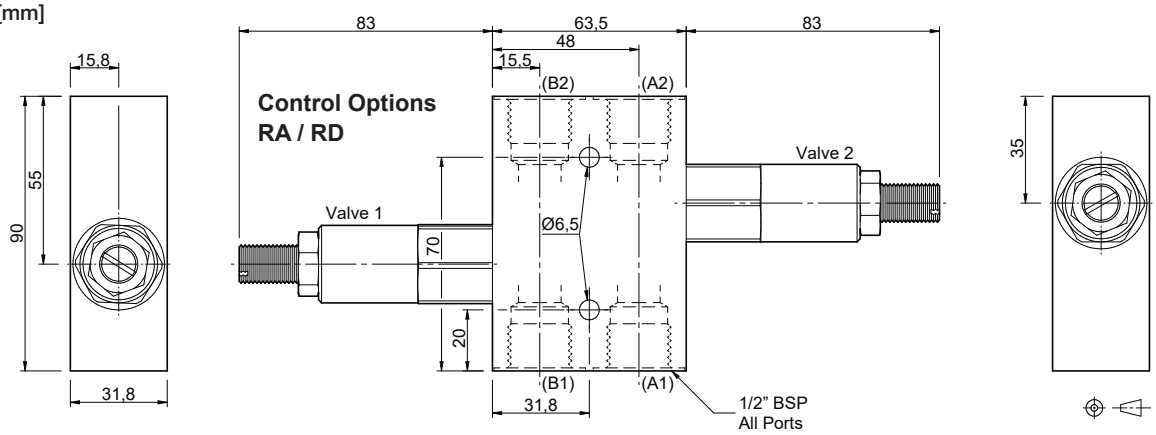

Ordering Chart

Part No.	Description	Max. flow (lpm)	Max. pressure (bar)
RF232-RA0030SD0012A	SOLENOID UNLOADER RELIEF VALVE 12VDC	40	210
RF232-RA0030SD0024A	SOLENOID UNLOADER RELIEF VALVE 24VDC	40	210
RF232-RA0030SD0011A	SOLENOID UNLOADER & RELIEF VALVE 110V50HZ	40	210
RF232-RA0030SD0023A	SOLENOID UNLOADER & RELIEF VALVE 230V50HZ	40	210

RA / SD

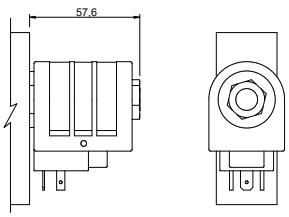

Note: manual overide for sol. valve available on request.

Hydrastore
Hydraulic Systems & Components

DUAL OVERCENTRE C/W CROSS LINE RELIEF & BRAKE RELEASE SHUTTLE

Up to 350 bar - Up to 40 lpm

DESCRIPTION

Ideal for motor applications where load control and pressure limitations is required. These controls meter loads in both directions, preventing run-away situations or cavitation. In addition to the overcentre valves two cross line relief's limit service pressure. A shuttle valve is also incorported that can provide functions such as brake release or provide pressure to a sensor.

FEATURES

- Steel (zinc plated) material options.
- Multiple metering, pilot ratio and pressure setting options.
- Compact, efficient design.
- Easy access, in-line porting.
- Multiple test ports for system monitoring.

SCHEMATIC

RF-4113

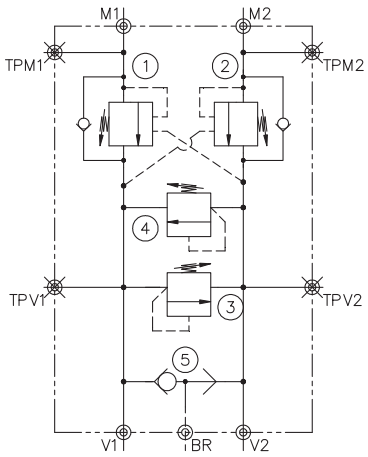

Dimensions [mm]

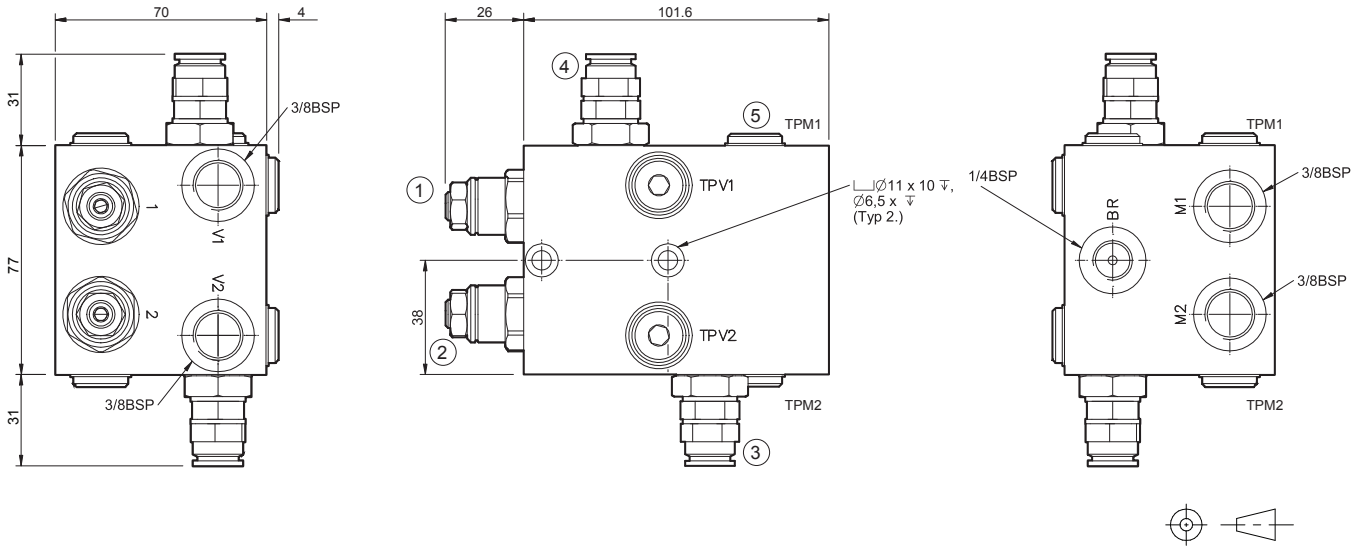

Ordering Chart

Part No.	Description	Max. flow (lpm)	Max. pressure (bar)	Pressure range (bar)
RF4113-23282121S	DUAL OVERCENTRE RELIEF CONTROL + BRAKE SHUTTLE	40	350	70-250

Note: 70-280 bar setting range on overcentres

PROPORTIONAL PRESSURE COMPENSATED PRIORITY FLOW CONTROL

Up to 240 bar - Up to 120 lpm

DESCRIPTION

A manifold control system comprising of separate proportional metering control and 3 port bypass compensator. The proportional valve is normally closed in the de-energised condition. In this state there is zero priority flow – all oil supplied is passed to bypass. As current supplied to the proportional valve increases a priority flow is supplied, excess flow is then bypassed. In the event of any load variation a constant flow output is maintained. The bypass line can be pressurised but bypass pressure must be lower than priority pressure to maintain compensation on the priority line. These valves are used in a wide variety of applications where remote variable supply to actuators is required.

FEATURES

- Steel (zinc plated) material options
- Multiple metering, and compensator bias pressure setting options
- Compact, efficient design
- Easy access, in-line porting
- Multiple coil and termination options

SCHEMATIC

RF-4120

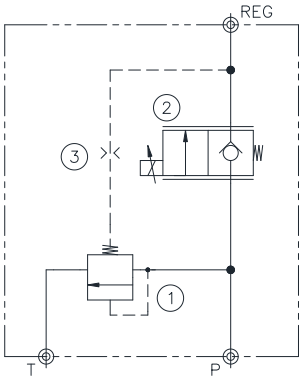

Note: Valve overide option available on request

Note: PWM driver available on request

Dimensions [mm]

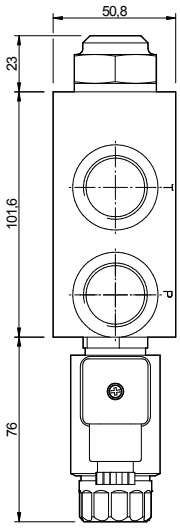

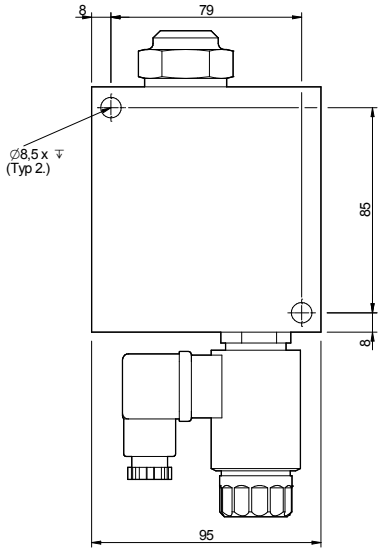

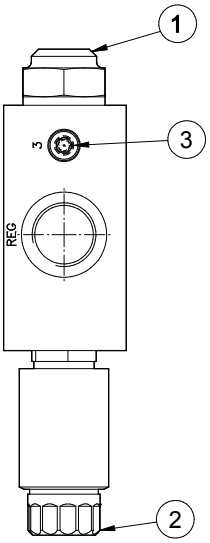

Specifications

Typical Internal Leakage	0-10 drops/min at 250 bar
Hysteresis	+/- 3%
Viscosity Range	3 to 647 cSt
Filtration	ISO 18/16/13
Media Operating Temperature Range	-40˚C to + 120˚C
Operating Fluid Media	General Purpose Hydraulic Fluid
Seal Kit	SK-RF4120
PWM or Dither frequency suggest	100 - 150 Hz

Ordering Chart

Part No.	Description	Max. flow (lpm)	Max. pressure (bar)
RF4120-A11200HC12/S	PROP PRESSURE COMP PRIORITY FLOW CONTROL 12 VDC	15	240
RF4120-B11200HC12/S	PROP PRESSURE COMP PRIORITY FLOW CONTROL 12 VDC	30	240
RF4120-C11200HC12/S	PROP PRESSURE COMP PRIORITY FLOW CONTROL 12 VDC	45	240
RF4120-A11200HC24/S	PROP PRESSURE COMP PRIORITY FLOW CONTROL 24 VDC	15	240
RF4120-B11200HC24/S	PROP PRESSURE COMP PRIORITY FLOW CONTROL 24 VDC	30	240
RF4120-C11200HC24/S	PROP PRESSURE COMP PRIORITY FLOW CONTROL 24 VDC	45	240

Hydrastore
Hydraulic Systems & Components

MULTI STATION PILOT CONTROL ASSEMBLY

DESCRIPTION

Used in pilot control applications where an additional electrical PWM proportional function to the existing pilot service is required. As an example this offers an easy interface for the addition of a radio control system to operate an excavator that would normally only be funtioned from the mechanical pilot joystick within the cab. The existing joystick pilot control lines are intercepted then fed in and out of this manifold and depending on which function is called for to operate, that is the cab mounted functions or radio control, the shuttle valves isolate one function from another giving conventional operation of the main services in a reliable and cost effective form.

FEATURES

- Aluminium (anodised) manifold
- IP67 electrical connections
- Integral shuttle valves for automatic control and isolation of the cab controls

Performance.

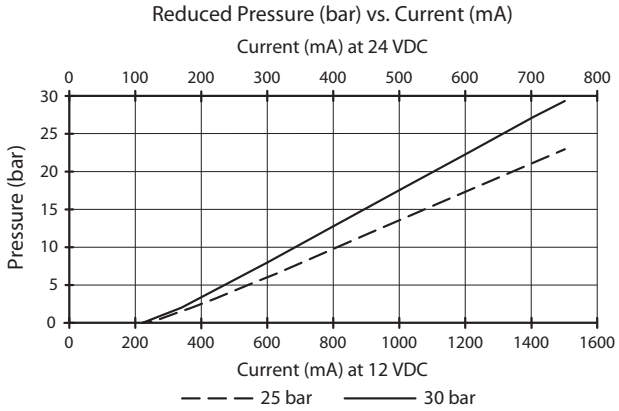

Typical Circuit

RF-3800

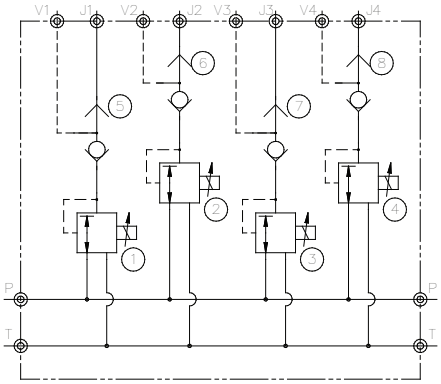

Coil Specifications

Current Supply	PWM (Pulse Width Modulation)
Rated Current Range	200 - 1500 mA (12 Volts) 100 - 750 mA (24 Volts)
PWM or Super-imposed Dither Frequency	100 - 200 Hz
Coil Resistance (12 vdc)	5.4 Ohm +/- 5% at 20°C
Coil Resistance (24 vdc)	22 Ohm +/- 5% at 20°C
Max. Power Consumption	12 Watt (20°C)
Protection Degree	IP67 according to IEC 529
Coil Termination	Amp Junior Timer 84-9419

Ordering Chart

Part No.	Description	Max. flow (lpm)	Max. pressure (bar)
RF3800H3041D12A	MULTI STATION PILOT CONTROL ASSEMBLY 12 VDC	4	240
RF3800H3041D24A	MULTI STATION PILOT CONTROL ASSEMBLY 24 VDC	4	240

Dimensions (mm)

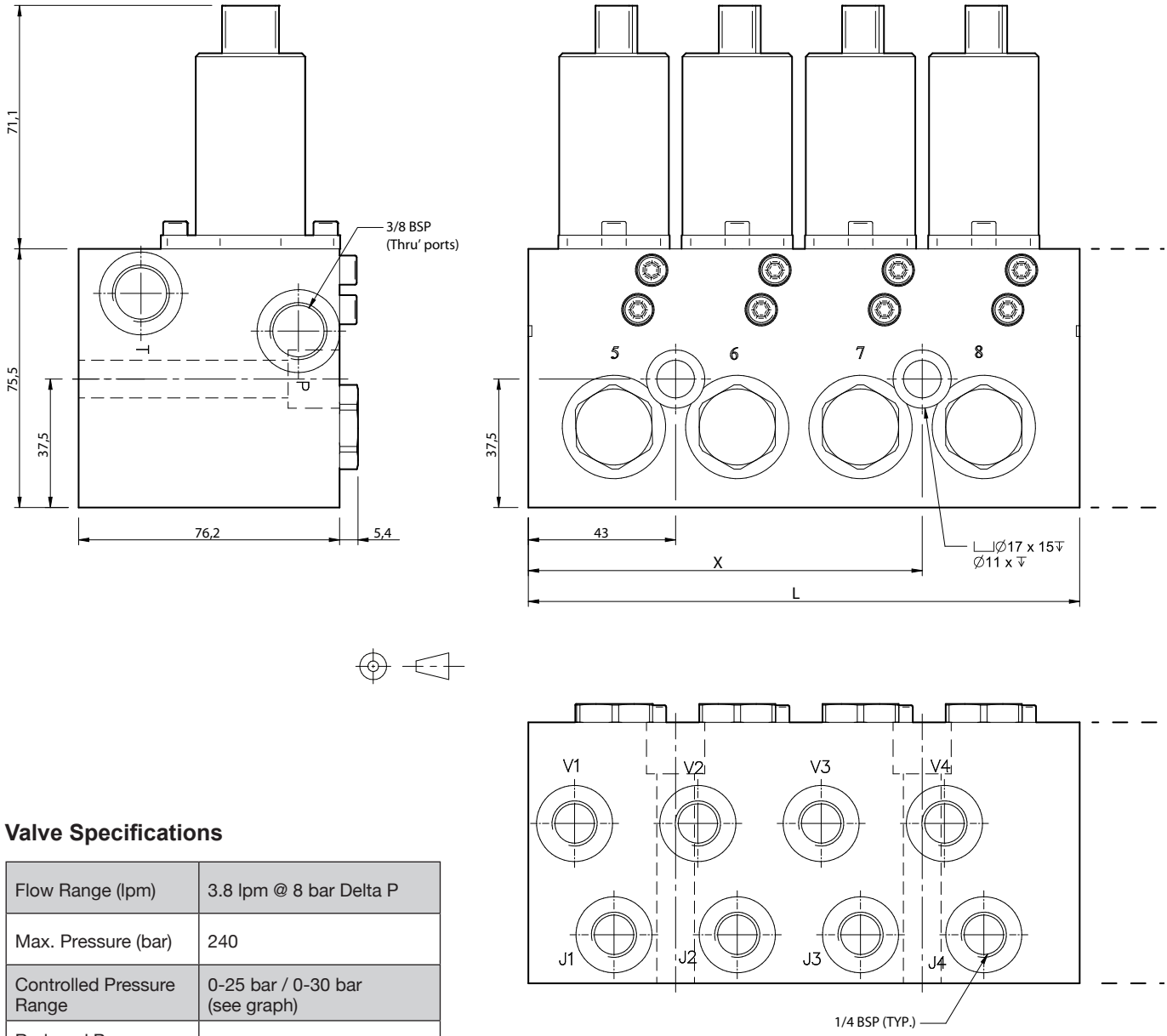

Valve Specifications

Flow Range (lpm)	3.8 lpm @ 8 bar Delta P
Max. Pressure (bar)	240
Controlled Pressure Range	0-25 bar / 0-30 bar (see graph)
Reduced Pressure Tolerance	+/- 5%
Max. Back-pressure at T port	20 bar
Internal Leakage	up to 44 cc/min @ 240 bar
Hydraulic Oil	General purpose hydraulic fluid
Viscosity Range	3 to 640 cSt
Filtration	ISO 18/15/13
Operating Temp.	-25 to 90˚C
Spare Seal Kit (Viton) Complete	SK-RF3800V
Spare Seal Kit (Viton) Shuttle Valve	SK-DPPBV
Spare Seal Kit (Viton) Reducer	SK-TT043V

Hydrastore
Hydraulic Systems & Components

CYLINDER UNI-DIRECTION LOCK VALVE

Description

This assembly is designed for single acting cylinder applications where a lift, hold and lower operation is required. A compact banjo mounted design is used which allows for fitting direct onto the loaded port of a cylinder. In the first part of the cycle oil is allowed to pass freely through the valve assembly with the solenoid valve being energised or de-energised depending on valve selection / desired operation. When stopped, the solenoid valve is de-energised thus holding the cylinder in place and preventing the cylinder from being able to move back. The final part of the cycle sees the solenoid valve being energised allowing the cylinder to return back to its initial position.

Features

- Aluminium body, clear anodised.
- G3/8" ports
- Poppet valve used for good load holding characteristics.

D-PBS2B

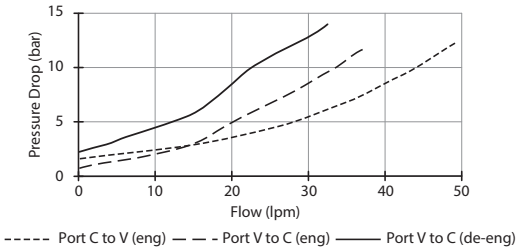

Circuit Examples

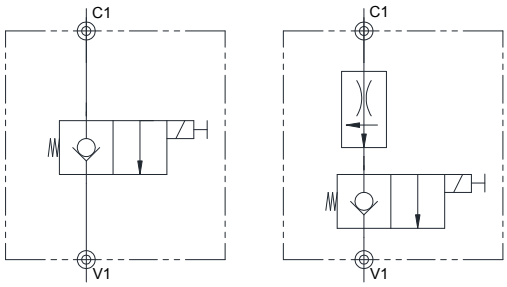

Dimensions

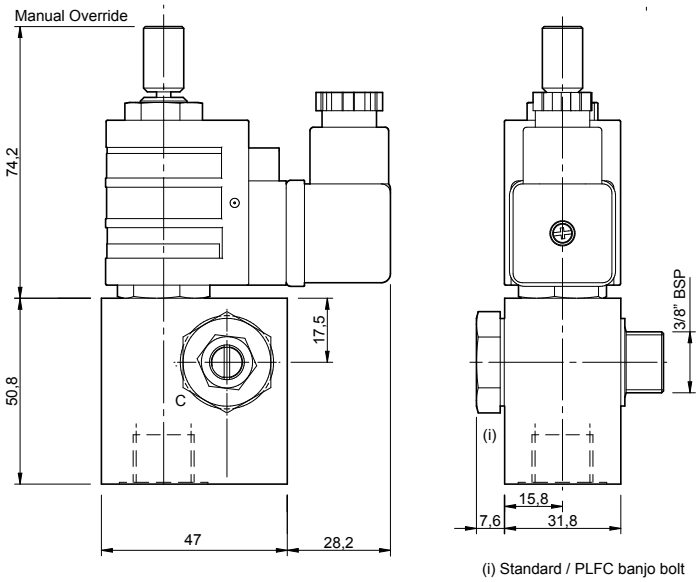

(i) Standard / PLFC banjo bolt

Ordering Chart

Part No.	Description	Max. flow (lpm)	Max. pressure (bar)
RF-3535B0M00HC12A	BANJO LOCK, NC, OVERIDE, G038, 12VDC	30	210
RF-3535B0M00HC24A	BANJO LOCK, NC, OVERIDE, G038, 24VDC	30	210
RF-3535B0008HC12A	BANJO LOCK, NC, 8 LPM PCFC, G038, 12VDC	30	210
RF-3535B0008HC24A	BANJO LOCK, NC, 8 LPM PCFC, G038, 24VDC	30	210

Note: Pressure compensated flow control 8lpm standard but other flow rates are available on request

CYLINDER BI-DIRECTION LOCK VALVE

Description

This assembly is designed for load holding applications. A compact banjo mounted design is used which allows for fitting direct onto the loaded port of an actuator. When de energised oil is blocked from flowing in both directions and when energised, oil can pass through either path.

Features

- Aluminium body, clear anodised.
- G3/8" ports
- Poppet valve used for good load holding characteristics.

T-PBS2I

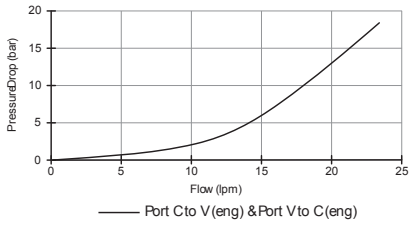

Circuit Examples

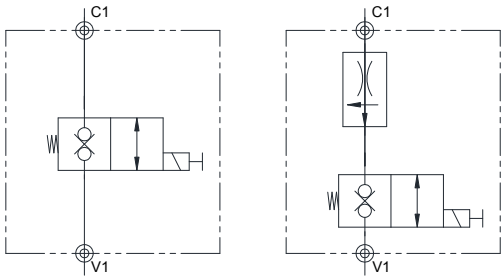

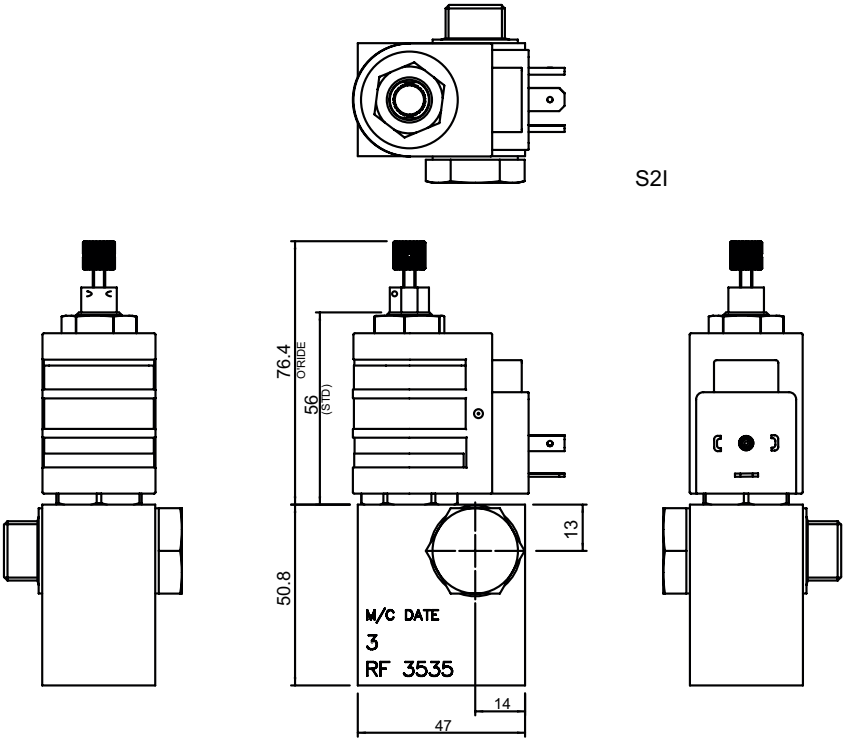

Ordering Chart

Part No.	Description	Max. flow (lpm)	Max. pressure (bar)
RF-3535I0K00HC12A	BANJO LOCK, BI-DIR. NC, OVERIDE, G038, 12VDC	17	210
RF-3535I0K00HC24A	BANJO LOCK, BI-DIR. NC, OVERIDE, G038, 24VDC	17	210
RF-3535I0008HC12A	BANJO LOCK, BI-DIR. NC, 8 LPM PCFC, G038, 12VDC	17	210
RF-3535I0008HC24A	BANJO LOCK, BI-DIR. NC, 8 LPM PCFC, G038, 24VDC	17	210

Note: Pressure compensated flow control 8lpm standard but other flow rates are available on request

REGENERATIVE CONTROL
LINE MOUNTED, CETOP 5

Description

These regenerative controls are designed for cylinder applications where a fast approach is required. The regenerative function combines pump flow with the oil displaced from the annulus of the cylinder. In the extend mode the cylinder starts at a fast speed and as load progressively increases the regenerative flow is unloaded to tank where the cylinder reduces the speed but increases in force. Remaining cylinder stroke is completed at the speed determined by the pump flow rate and the force equivalent to the full bore area of the cylinder. In retract mode the cylinder retracts at normal pump flow rate speed.

Symbol

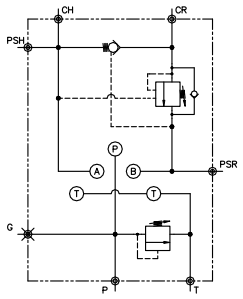

Features

- 60 lpm inlet, 160 lpm max regen.
- Aluminium (anodised).
- Adjustable relief valve.
- Compact, efficient design.

Dimensions

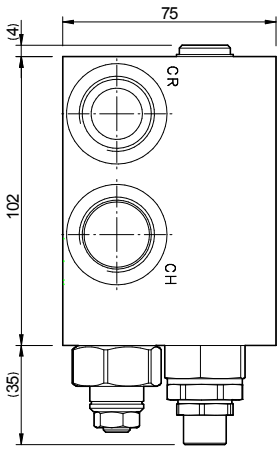

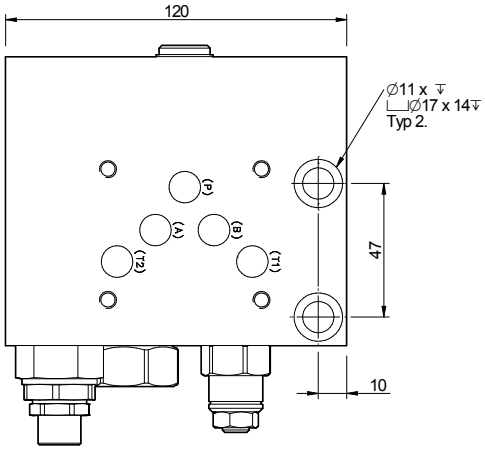

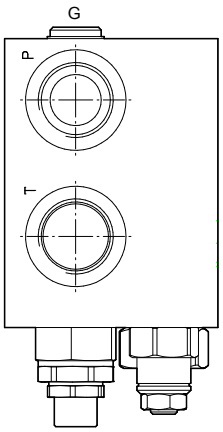

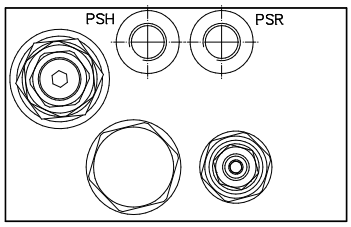

P,T, CH & CR - ¾"BSP Ports
G, PSR & PSH - ¼" BSP Ports

Ordering Chart

Part No.	Description	Max. flow (lpm)	Max. pressure (bar)
RF381021/A	CETOP 05 REGEN MANIFOLD - MAX REGEN FLOW 160 LPM	50	240

Note: Interface only, as standard. Directional valves available on request.

PRESSURE REDUCER WITH REVERSE FLOW CHECK

Description

Line mounted pressure reducing valve. This valve has a normally open characteristic that allows flow to pass from P to RP. When pressure at RP meets the setting of the valve it modulates and maintains the set pressure. If, through external (dynamic) forces, pressure rises in the RP line, the pressure relieves through port T until the desired setting is met.
When used in double acting systems the free flow check (2) allows oil to pass from RP to P.

Specifications

- Low profile, compact and efficient design
- Multiple pressure ranges.

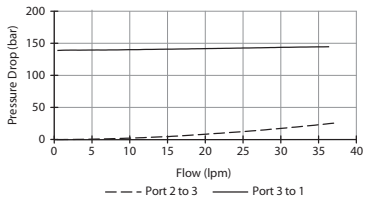

Dimensions

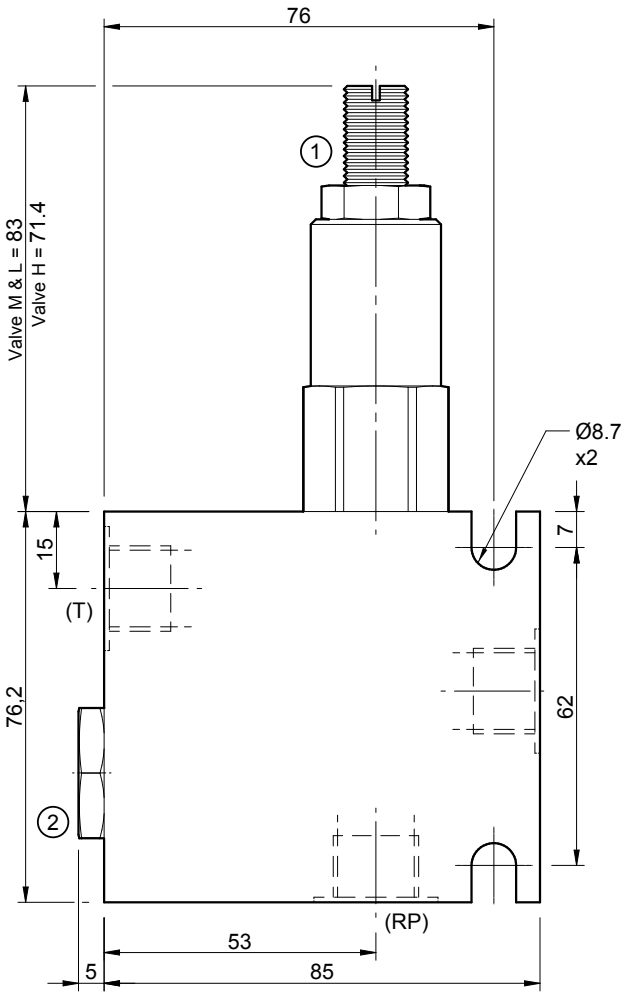

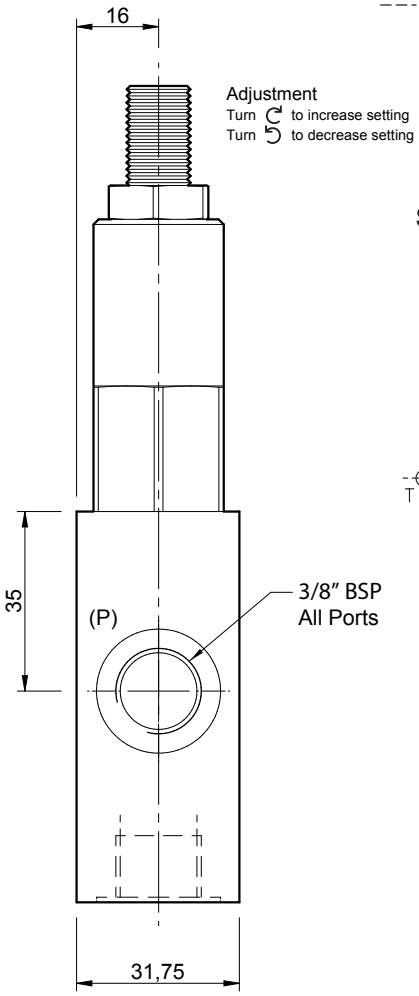

Schematic

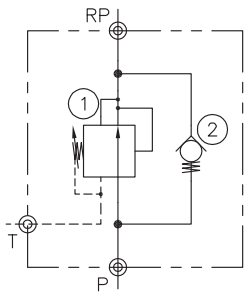

Ordering Chart

Part No.	Description	Max. flow (lpm)	Max. pressure (bar)
RF1490MSA	PRESSURE REDUCER VALVE + BYPASS CHECK 7-210 bar	40	210
RF1490LSA	PRESSURE REDUCER VALVE + BYPASS CHECK 5-55 bar		

HOT OIL SHUTTLE ASSEMBLY

Description

This manifold is used within hydrostatic transmission circuits to remove heat and any potential contamination. The valves are fitted into the service lines, during operation the hot oil flushing circuit allows a discharge of oil from the low pressure service to tank, oil pushed from the service lines via the charge pump. Depending on the application either a fixed orifice or relief valve can be used to control discharge characteristics.

Features

- 150 lpm max. - service lines
- 50 lpm max. - charge pump
- Compact line mount design
- ½" or 3/4" BSP Ports

Symbol

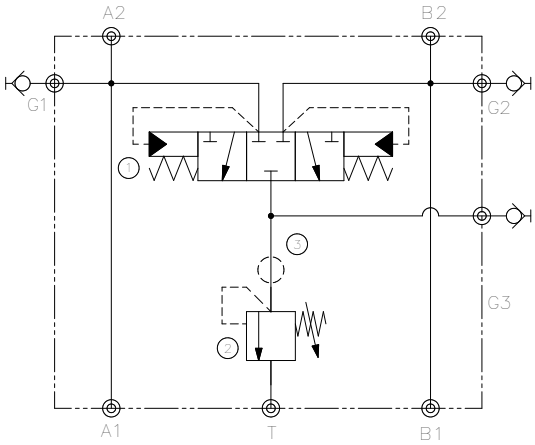

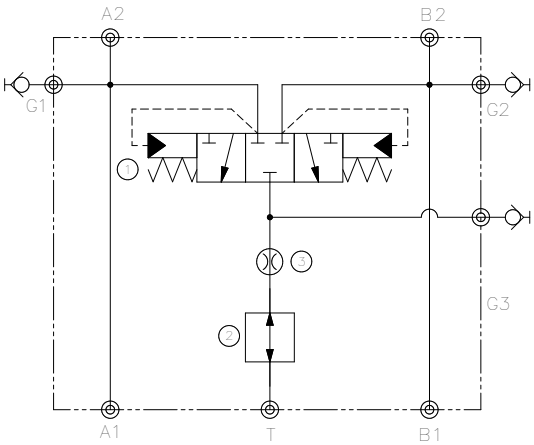

Flow rate (lpm)	150
Max. pressure (bar)	350
Relief valve reseat pressure	Nominal 90% of cracking pressure
Hydraulic Oil	General purpose hydraulic fluid
Viscosity Range	7.4 to 420 cSt
Filtration	ISO 18/16/13
Operating Temp.	-40 to 110˚C
Spare Seal Kit	SK-RF4958
Weight	2.4 kg (alum) 5.9 kg (steel)

Note: Consult factory for alternative layout or higher flow design options

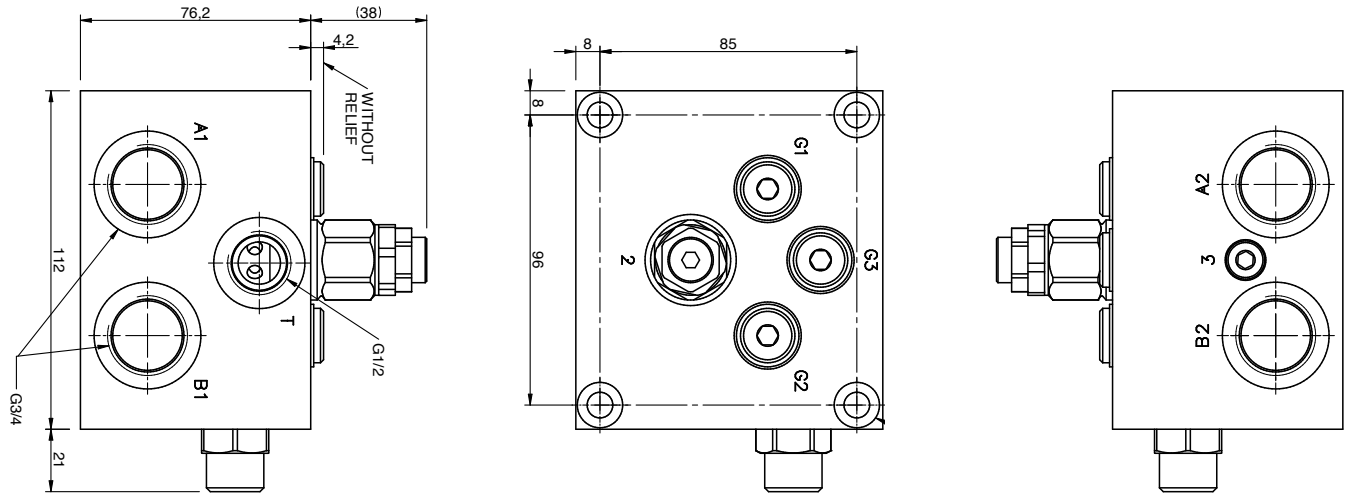

Ordering Chart

Part No.	Description	Max. flow (lpm)	Max. pressure (bar)	Weight (kg.)
RF4958LHXXXX010DS	HOT OIL SHUTTLE WITH 1MM PURGE ORIFICE	150	350	5.9
RF4958LNXXXX020DS	HOT OIL SHUTTLE WITH PURGE RELIEF (20 BAR)			

Hydrastore
Hydraulic Systems & Components

Online shop now open

Every stock item in this catalogue is now available online for next day delivery

www.hydrastore.co.uk/shop

Switches & sensors

TEMPERATURE SWITCH - S2 TAF	112
SKBA PRESSURE SWITCH	113
PRESSURE SWITCH - SMA	114
PRESSURE TRANSDUCER T200	115
RL SERIES	116
ADJUSTABLE THERMOSTAT TC2	117
EPS PRESSURE SWITCH	118

Hydrastore
Hydraulic Systems & Components

TEMPERATURE SWITCH - S2 TAF

DESCRIPTION

The S2TAF is a bimetal temperature switch featuring an internal cavity passing oil for sensing of the fluid temperature without the need of a probe.

APPLICATIONS

- Hydraulic reservoir safety switch
- Coolant temperature switch

FEATURES

- Factory preset
- High current rating
- Reliable differential
- Compact size

Electrical	120 VAC - 15A Resistive 240 VAC - 10A Resistive 12VDC - 12A Resistive 24 VDC - 6A Resistive
Switch Type	Bimetal
Protection	EN 175301-803 Type A - IP65, Terminals - IP00 Flying Lead: IP67 Deutch DT04-2P: IP67
Repeatability	+/- 3.89°C
Temperature Range	77°F to 293°F (25 °C to 145°C)
Temperature Differential	25°F (12°C)
Temperature Exposure Limit	300°F (149°C)
Housing Material	Brass (Optional Stainless Steel)
Maximum Overpressure	S2TAF 4M, 6M Model 5000 PSI (345 BAR) S2TAF 8M, 8S Model 2000 PSI (138 BAR) S3TAF Models: 5000 PSI (345 BAR)
Weight	0.31 lbs (0.14 kg)

Note: 1/2 BSP

Dimensions [mm]

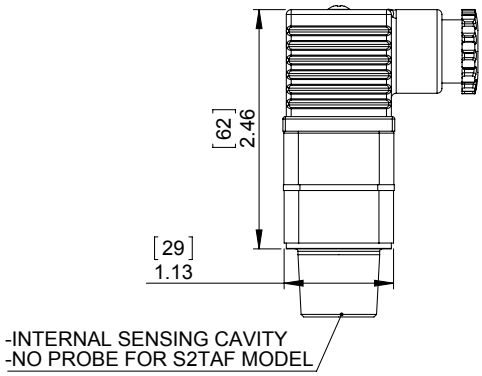

EN 175301-803 Type A

Wiring Code	
CONTACT	DIN 43650 TYPE
COMMON	PIN 1
NORMALLY CLOSED	PIN 2
NORMALLY OPEN	PIN 2

Ordering Chart

Part No.	Description
S2TAF104R8GAHC	TEMP SWITCH 40 DEG C-1/2"BSP - NORMALLY OPEN
S2TAF122R8GAHC	TEMP SWITCH 50 DEG C-1/2"BSP - NORMALLY OPEN
S2TAF140R8GAHC	TEMP SWITCH 60 DEG C-1/2"BSP - NORMALLY OPEN
S2TAF104R8GBHC	TEMP SWITCH 40 DEG C-1/2"BSP - NORMALLY CLOSED
S2TAF122R8GBHC	TEMP SWITCH 50 DEG C-1/2"BSP - NORMALLY CLOSED
S2TAF140R8GBHC	TEMP SWITCH 60 DEG C-1/2"BSP - NORMALLY CLOSED

Note: Other temp settings available on request - speak to our sales team for assistance.

SKBA PRESSURE SWITCH

DESCRIPTION

Cost effective miniature pressure switch with high proof pressures ideal for mobile and other harsh applications. It is offered with a variety of mechanical and electrical terminations for easy integration.

FEATURES

- Silver nickel alloy contacts
- Diaphragm/piston combination
- High ingress protection
- Compact body
- Gold contact available

APPLICATIONS

- Industrial tools
- Garbage trucks
- Brake pressure switch

Electrical	100 VA, 42 VDC Optional: Gold Contact
Switch Type	Blade Contact
Protection	Exposed Terminals - IP00 (IP68 Available)
Temperature Range	-20°F to 180°F (-29°C to 82°C) Nitrile
Mechanical Range	1,000,000 Cycles @ 1000 PSI (69 BAR)
Diaphragm Material	Standard: Nitrile Optional: Viton, EPDM, HNBR
Housing Material	Zinc Plated Steel (Optional Stainless Steel)
Maximum Overpressure	9000 PSI (600 BAR)
Repeatability	+/- 3% of full set point range at 20°C (68°F) SKBA-1 model, +/- 1.5 psi
Weight	0.16 lbs (0.07 kg)

Note: 1/4 BSP

Dimensions [mm]

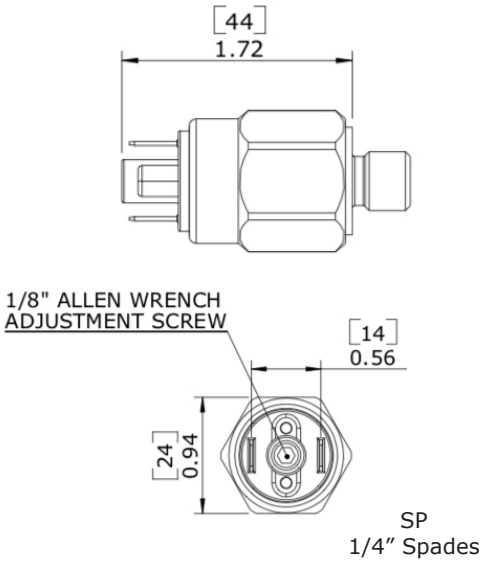

Pressure Selection:
Field Adjustable - Select Model Code

Ordering Chart

Part No.	Description	Pressure range (bar)
SKBA-2-4G-A-SP	PRESSURE SWITCH 1.4-8.2 BAR - NORMALLY OPEN	1.4 - 8.2
SKBA-3-4G-A-SP	PRESSURE SWITCH 6.2-17 BAR - NORMALLY OPEN	6.2 - 17
SKBA-4-4G-A-SP	PRESSURE SWITCH 17-65 BAR - NORMALLY OPEN	17 - 65
SKBA-5-4G-A-SP	PRESSURE SWITCH 48-131 BAR - NORMALLY OPEN	48 - 131
SKBA-6-4G-A-SP	PRESSURE SWITCH 69-206 BAR - NORMALLY CLOSED	69 - 206
SKBA-2-4G-B-SP	PRESSURE SWITCH 1.4-8.2 BAR - NORMALLY CLOSED	1.4 - 8.2
SKBA-3-4G-B-SP	PRESSURE SWITCH 6.2-17 BAR - NORMALLY CLOSED	6.2 - 17
SKBA-4-4G-B-SP	PRESSURE SWITCH 17-65 BAR - NORMALLY CLOSED	17 - 65
SKBA-5-4G-B-SP	PRESSURE SWITCH 48-131 BAR - NORMALLY CLOSED	48 - 131
SKBA-6-4G-B-SP	PRESSURE SWITCH 69-206 BAR - NORMALLY CLOSED	69 - 206

Hydrastore
Hydraulic Systems & Components

PRESSURE SWITCH - SMA

DESCRIPTION

High accuracy and resolution the SMA pressure switch is ideal for many hydraulic and pneumatic applications. It utilises a proven piston/diaphragm design to provide excellent accuracy and high proof pressures and zero leakage. Also provides IP65 DIN connection.

FEATURES

- Snap action micro switch
- Factory set or field adjustable
- Diaphragm/piston design for longevity
- Wide adjustment range
- High proof pressures

APPLICATIONS

- Hydraulic system control
- Material handling equipment
- Lubrication systems
- Garbage compactors

Specifications

Electrical	5A [12/24 VDC, 125 VAC] or 3A [250 VAC] Optional: 10A or Gold Contact
Switch Type	Snap Action
Protection	EN 175301-803 Type A - IP65, Terminals - IP00
Temperature Range	-20°F to 180°F (-29°C to 82°C) Nitrile
Mechanical Range	1,000,000 Cycles @ 1000 PSI (69 BAR)
Diaphragm Material	Standard: Nitrile Optional: Viton, EPDM
Housing Material	Zinc Plated Steel (Optional Stainless Steel)
Maximum Overpressure	9000 PSI (620 BAR) 4700 PSI (324 BAR) for SMA-3 model
Repeatability	+/- 2% of full set point range at 20°C (68°F)
Differential	7 - 30% of setting
Weight	0.37 lbs (0.17 kg)

Dimensions [mm]

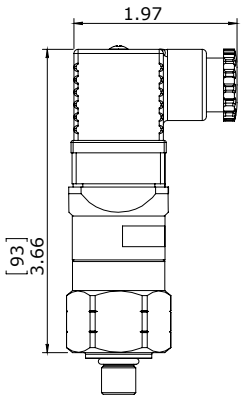

EN 175301-803 Type A

1/4" BSP MALE

Wiring code

CONTACT	EN 175301-803 Type A
COMMON	PIN 1
NORMALLY CLOSED	PIN 2
NORMALLY OPEN	PIN 3

Ordering Chart

Part No.	Description	Pressure range (bar)
SMA-5-4G-C-HC	HYDRAULIC PRESSURE SWITCH IP65 5.2-21 BAR- NO/NC	5.2 - 21
SMA-6-4G-C-HC	HYDRAULIC PRESSURE SWITCH IP65 21-83 BAR- NO/NC	21 - 83
SMA-7-4G-C-HC	HYDRAULIC PRESSURE SWITCH IP65 69-207 BAR- NO/NC	69 - 207
SMA-8-4G-C-HC	HYDRAULIC PRESSURE SWITCH IP65 138-345 BAR - NO/NC	138 - 345

PRESSURE TRANSDUCER T200

DESCRIPTION

The T200 series is suitable for both mobile and industrial applications. Its small profile is ideal for locating in tight areas with space constraints. The body is machined from a single piece of 304 stainless steel to provide added protection for the internal electronics. A piezoresistive ceramic sensor along with ASIC signal conditioning provides excellent accuracy and a thermally compensated output.

FEATURES

- Piezoresistive Ceramic Sensor
- ASIC Signal conditioning

APPLICATIONS

- Industrial Equipment
- Safety Monitoring
- Mobile Equipment

Accuracy	0.5% BFSL
Pressure range (bar)	0 to 7,500 PSI (517 BAR)
Proof Pressure	140% to 200% FS based on range (consult factory)
Burst Pressure	180 to 400% FS based on range (consult factory)
Long Term Drift	<0.3% FS @ 77°F (25°C)
Thermal Error	7.5 psi ≥ 100 psi: 0.01% FS/°F (0.018% FS/°C) 100 psi > 400 psi : 0.009% FS/°F (0.016% FS/°C) 400 psi ≥ 1000 psi: 0.011% FS/°F (0.019% FS/°C) 1000 psi > 3000 psi: 0.012% FS/°F (0.021% FS/°C) 3000 psi ≥ 7500 psi: 0.018% FS/°F (0.028% FS/°C)
Compensated Temperatures	T200 Series: 32°F to 185°F (0°C to 85°C) T201 Series: -40°F to 257°F (-40°C to 125°C)
Operating Temperatures	-40°F to 257°F (-40°C to 125°C)
Storage Temperature Rating	-40°F to 275°F (-40°C to 135°C)
Process Connection	SS304
Wetted Materials	Ceramic Al2O3 NBR (Standard) or Optional: FKM,HNBR,EPDM
Vibration	10g (20-2000Hz) for ≤ 58 PSI (4 BAR) 20g (20 - 500Hz) for ranges > 58 PSI (4 BAR)
Shock	50g (11ms)
Supply Voltage	4 - 20mA : 8 - 30 VDC 0 - 10V : 12 - 30 VDC 0.5 - 4.5V : 4.5 - 5.5 VDC (ratiometric) 0.5 - 4.5V : 8 - 30 VDC 0 - 5V : 8 - 30 VDC 1 - 5V : 8 - 30 VDC 1 - 6V : 8 - 30 VDC 0.25 - 10.25 V : 12 - 30 VDC Other supply voltage available upon request
Protection	Overvoltage, Short Circuit, Reverse Polarity Protection
Response Time	<1ms
Ingress Protection	IP67 (IP65 for M2 Electrical Connection)
Compliance	IEC/EN 61000-4-3(2006) 100V/m 80-1000MHz IEC/EN 61000-4-4(2004) Class 3 IEC/EN 61000-4-6(2006) 3Vrms 0.15-80MHz ROHS
Weight	0.15 lbs (0.07kg)

Connector	Output Signal				
	4 - 20 mA		Voltage		
	Supply +	Supply -	Supply +	Common	Output +
M12	1	3	1	3	4

Dimensions [mm]

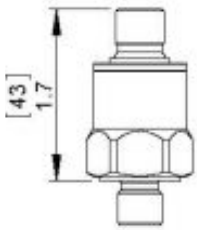

M12

1/4″ BSP MALE

Ordering Chart

Part No.	Description	Max. pressure (bar)
T200-020BA2M124GNT1	PRESSURE TRANSDUCER 0-20 BAR ABSOLUTE. 4-20 mA	0-20
T200-050BA2M124GNT1	PRESSURE TRANSDUCER 0-50 BAR ABSOLUTE. 4-20 mA	0-50
T200-100BA2M124GNT1	PRESSURE TRANSDUCER 0-100 BAR ABSOLUTE. 4-20 mA	0-100
T200-200BA2M124GNT1	PRESSURE TRANSDUCER 0-200 BAR ABSOLUTE. 4-20 mA	0-200
T200-400BA2M124GNT1	PRESSURE TRANSDUCER 0- 400 BAR ABSOLUTE. 4-20 mA	0-400
T200-020BA3M124GNT1	PRESSURE TRANSDUCER 0-20 BAR ABSOLUTE. 0-10 v	0-20
T200-050BA3M124GNT1	PRESSURE TRANSDUCER 0-50 BAR ABSOLUTE. 0-10 v	0-50
T200-100BA3M124GNT1	PRESSURE TRANSDUCER 0-100 BAR ABSOLUTE. 0-10 v	0-100
T200-200BA3M124GNT1	PRESSURE TRANSDUCER 0-200 BAR ABSOLUTE. 0-10 v	0-200
T200-400BA3M124GNT1	PRESSURE TRANSDUCER 0-400 BAR ABSOLUTE. 0-10 v	0-400

RL SERIES

A float switch is a liquid level sensor, a device used to detect the level of liquid within a tank. The output signal provides an indication of the level condition and can be used to trigger various output function such as safety circuits, indicators, an alarm, or other devices.

Specification:
Temperature range -20 degC + 100 degC
Compatible with Mineral Oils, Water based emulsions, Glycols, Phosphate Ester and Synthetic fluid

RL-G1

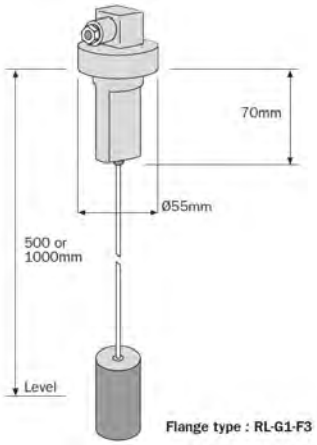

RL-G2

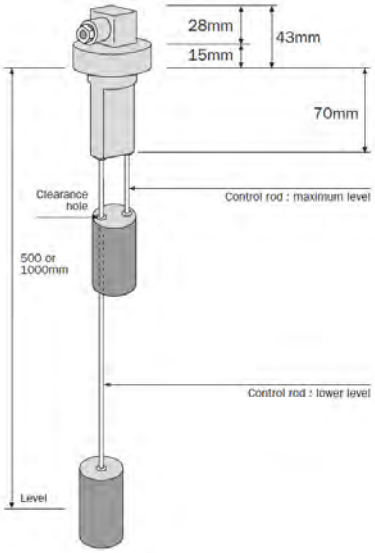

Flange mounting detail:
For: RL-G1-F3 & RL-G2-F3

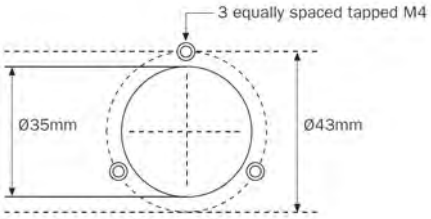

Flange type : RL-G1-F3

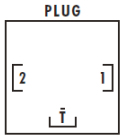

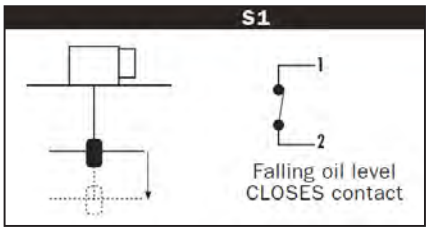

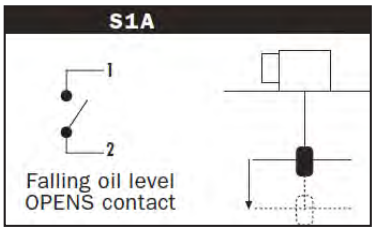

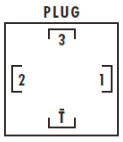

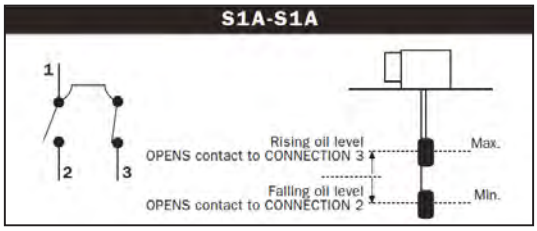

Ordering Chart

Part No.	Description
RL-G1-F3-S1	FLOAT SWITCH. FALLING OIL CLOSES
RL-G1-F3-S1A	FLOAT SWITCH. FALLING OIL OPENS
RL-G1-F3-S2	FLOAT SWITCH. FALLING OIL OPENS OR CLOSES
RL-G2-F3-S1A-S1A	FLOAT SWITCH FOR RISING OR FALLING SETUP

Note: Standard rod length 500mm

ADJUSTABLE THERMOSTAT TC2

The TC2 adjustable thermostat is a unipolar, liquid filled, encased, switch contacts immersion thermostat complete with a waterproof protection pocket.

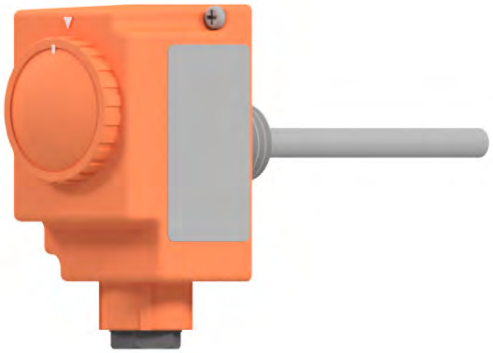

Differential : ΔT 3°C ;
Contacts : Ag 1000/1000 ;
Maximum contact load :
Alternating current 250V : 10A ;
Alternating current 380V : 7A ;
Switch of cutoff contacts loading ;
Fairlead : PG9 ;
Max. heat temperature : 80°C
Max. sensing bulb temperature : 130°C
Temperature rate of change : 1 K/min
Degree of protection : IP 40
Number of automatic cycles : II (100.000)

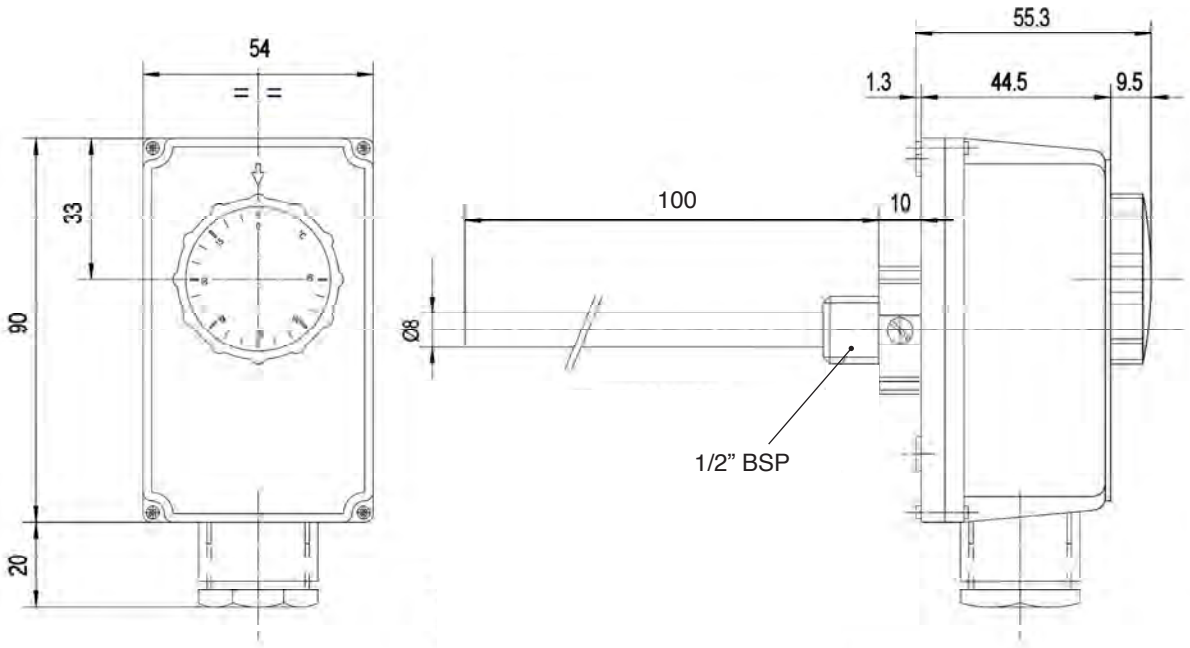

PG9 gland

Ordering Chart

Part No.	Description
TC2/L100	1/2" BSP THERMOSTAT 100MM LONG

Hydrastore
Hydraulic Systems & Components

EPS PRESSURE SWITCH

DESCRIPTION

EPS is an electronic pressure switch with a digital display to allow for ease of setup and continuous monitoring capabilities. It features a 350 degree rotatable display and port for increased flexibility. The EPS is offered with the option of 1 or 2 switching outputs and 4 to 20mA output. This allows for monitoring of different pressure values in a system and controllable differential. The EPS is offered with an M12 connector, 4 pin for 1 digital output and 5 pin for 2 digital output.

FEATURES

- Rotatable 350° digital display
- Red/Green led for clear identification
- Programmable differential

APPLICATIONS

- Industrial Equipment
- Safety Monitoring

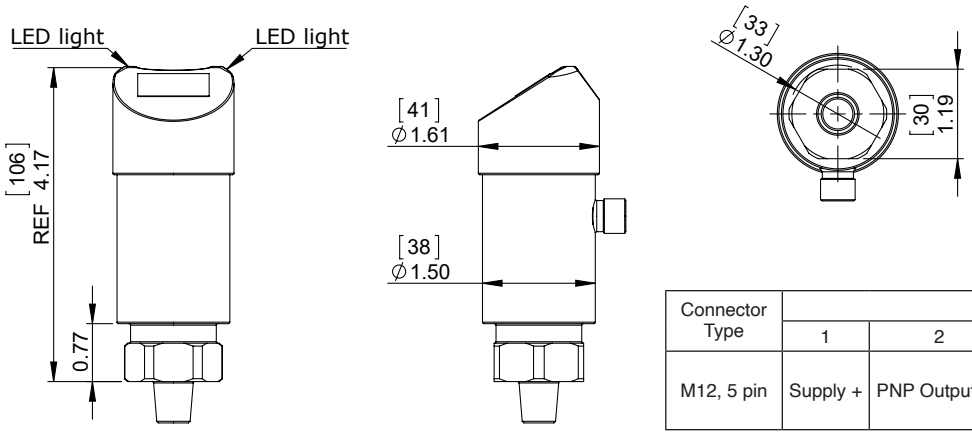

Connector Type	PINOUT				
	1	2	3	4	5
M12, 5 pin	Supply +	PNP Output #2	Common	PNP Output #1	4-20mA Output

Output	P2: 4 to 20mA analog output with 2 digital output (PNP)					
Accuracy	+/- 0.5 % FS					
Pressure Range	Nominal Value (psi)	Minimum Span Analog (psi)	Measuring Range (psi)		Proof Pressure (psi)	Burst Pressure (psi)
	5800	145	-14.50	5800	11600	14,000
Stability	+/- 0.5 % FS / 5 years					
Thermal Error (Typical)	Between -20°C to 80°C: +/- 0.02% span/ °C+/- 0.011% span/ °C					
Operating Temperature	-4°F to 185°F (-20°C to 85°C)					
Storage Temperature	-40°F to 185°F (-40°C to 85°C)					
Wetted Materials	SS316L					
Vibration	<1% FS , IEC 61298-3					
Supply Voltage	12-32 VDC					
Current Consumption	≤60mA					
Power Consumption	≤1.44W @ 24VDC					
Load Resistance	<(Supply Voltage-12)/0.06					
Transmission Distance	<3280 ft (1000 m)					
Protection	Reverse Polarity Protection					
Ingress Protection	IP67					
Compliance	IEC 61000-4-2, IEC 61000-4-3, IEC 61000-4-8, IEC 61000-4-4 ,IEC 61000-4-5, IEC 61000-4-6					
Weight	2.2 lbs (1 kg)					

Ordering Chart

Part No.	Description
EPS-5800PGP2M124GST1	PRESSURE TRANSDUCER 5800PSI, 2PNP, 5PIN, 1/4"BSP

Coolers

MA 120
BOL 121

Tanks 122

Tank lids 122

Bell housing and coupling 123

Tank furnishing accessories

FILLER BREATHER - TA 46 / TA 80 124
OIL LEVEL GAUGE 125
PRESSURE GAUGE 125
ISOLATOR 125

Test equipment

PRESSURE TEST KIT - BSP 1620 126
MICRO BORE TEST HOSE 126
TEST POINTS 126

Electric motors 127

Hydrastore
Hydraulic Systems & Components

MA

Aluminum plate and bar core with 12 or 24 VDC motor fan.

Ratings

Maximum Operating Pressure
250 psi (17 BAR)

Maximum Operating Temperature
300° F (150° C)

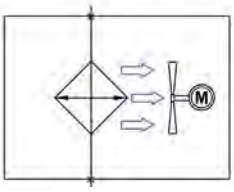

Without Bypass

Materials

Core Brazed Aluminum Bar and Plate
- Tanks – 5052 Aluminum
- Nose Bar & Little Bar – 3003-H Aluminum
- Air Fin, Plate, Turbulator & End Plate – 3003-O Aluminum

Connections Aluminum

Core Mounting Brackets Brazed Aluminum

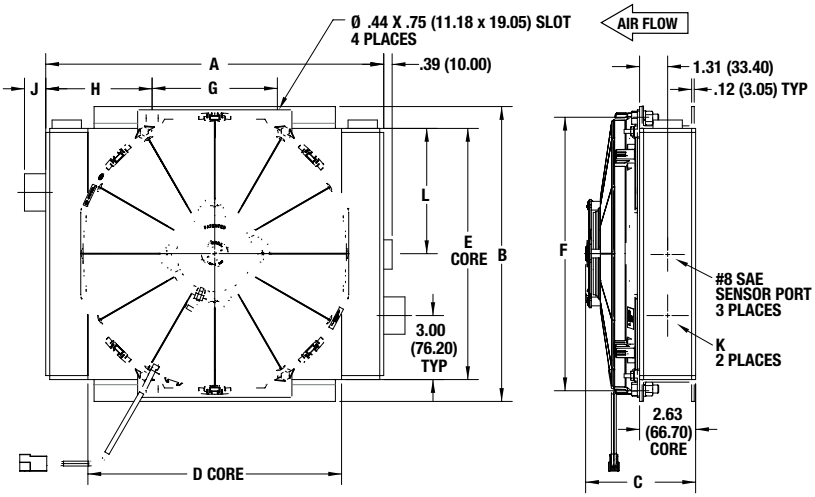

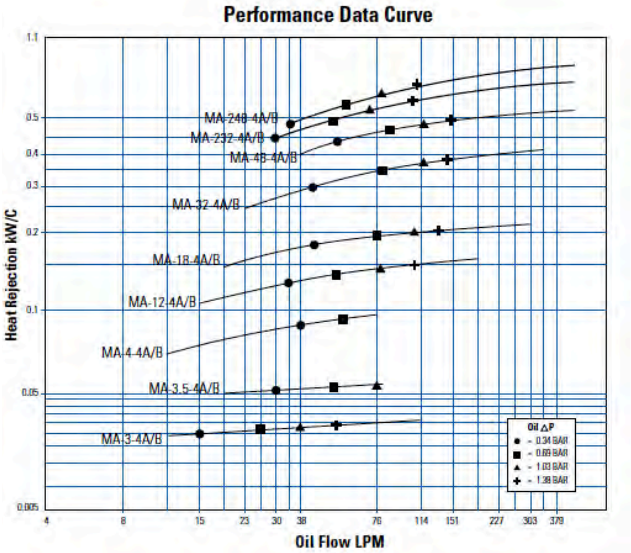

Ordering Chart

Part No.	Description	Thread Size (BSP)	Heat Rejection (kW/deg.C)	Temp Differential (deg.C)	Nominal Dissipation (kW)	Weight (kg.)	A (mm)	B (mm)	C (mm)	J (mm)
MA-4-3-4A	MOBILE OIL COOLER 12VDC NOM HEAT DISS 1.6	3/4”	0.04	40	1.6	7	313	269	199	-
MA-4-3-4B	MOBILE OIL COOLER 24VDC NOM HEAT DISS 1.6	3/4”	0.04	40	1.6	7	313	269	199	-
MA-12-3-4A	MOBILE OIL COOLER 12VDC NOM HEAT DISS 6	3/4”	0.15	40	6	9	351	304	250	25
MA-12-3-4B	MOBILE OIL COOLER 24VDC NOM HEAT DISS 6	3/4”	0.15	40	6	9	351	304	250	25
MA-18-3-4A	MOBILE OIL COOLER 12VDC NOM HEAT DISS 8	3/4”	0.2	40	8	10	402	351	305	25
MA-18-3-4B	MOBILE OIL COOLER 24VDC NOM HEAT DISS 8	3/4”	0.2	40	8	10	402	351	305	25
MA-32-3-4A	MOBILE OIL COOLER 12VDC NOM HEAT DISS 14.8	1”	0.37	40	14.8	13	500	469	415	28
MA-32-3-4B	MOBILE OIL COOLER 24VDC NOM HEAT DISS 14.8	1”	0.37	40	14.8	13	500	469	415	28
MA-48-3-4A	MOBILE OIL COOLER 12VDC NOM HEAT DISS 20	1”	0.5	40	20	20	602	561	511	28
MA-48-3-4B	MOBILE OIL COOLER 24VDC NOM HEAT DISS 20	1”	0.5	40	20	20	602	561	511	28
MA-232-3-4A	MOBILE OIL COOLER 12VDC NOM HEAT DISS 28	1 1/4”	0.7	40	28	29	849	526	191	30
MA-232-3-4B	MOBILE OIL COOLER 24VDC NOM HEAT DISS 28	1 1/4”	0.7	40	28	29	849	526	191	30

Note: Integral bypass available on request

BOL

Aluminum plate and bar core, rigged light weight and compact. Options for AC electric or hydraulic motor drive.

Ratings

Maximum Operating Pressure
250 psi (17 BAR)

Maximum Operating Temperature
300° F (150° C)

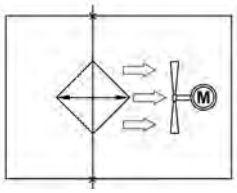

Without Bypass

Materials

Mounting Feet Steel

Standard Core Brazed Aluminum Bar and Plate
- Tanks – 5052 Aluminum
- Nose Bar & Little Bar – 3003-H Aluminum
- Air Fin, Plate, Turbulator & End Plate – 3003-O Aluminum

Fanguard Steel

Connectors Aluminum

Fan Aluminum Hub, Plastic Blades

Shroud Steel

Motor TEFC & IEC

BOL-8 through BOL-1600

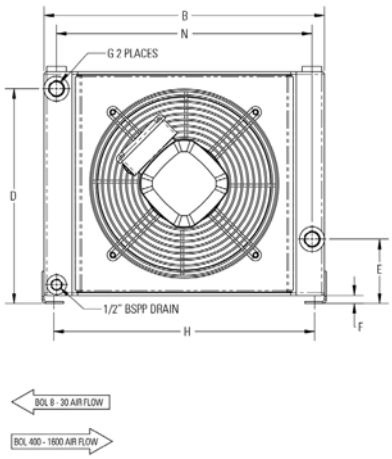

BOL-8 - 1600 Air flow direction can be modified upon request. Consult factory for details.

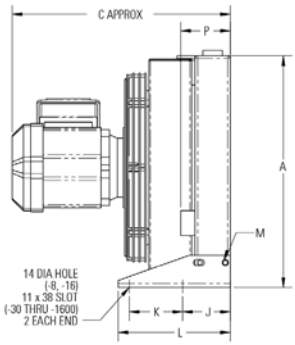

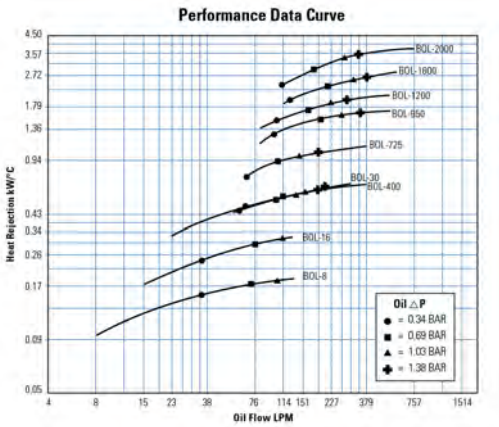

Ordering Chart

Part No.	Description	Heat Re-jection (kW/ deg.C)	Temp Differential (deg.C)	Nominal Dissipation (kW)	Weight (kg.)
BOL-8-3-18	IND. OIL COOLER-415V 3/4" BSP NOM HEAT DISS 6.8	0.17	40	6.8	20
BOL-16-3-18	IND. OIL COOLER-415V 3/4" BSP NOM HEAT DISS 12	0.3	40	12	25
BOL-30-3-18	IND. OIL COOLER-415V 1.1/4" BSP NOM HEAT DISS 24	0.6	40	24	57
BOL-725-3-18	IND. OIL COOLER-415V 1.1/4" BSP NOM HEAT DISS 42	1.05	40	42	77
BOL-950-2-18	IND. OIL COOLER-415V 2" SAE 3000 NOM HEAT DISS 62	1.55	40	62	136
BOL-1200-2-18	IND. OIL COOLER-415V 2" SAE 3000 NOM HEAT DISS 84	2.1	40	84	195
BOL-1600-2-18	IND. OIL COOLER-415V 2" SAE 3000 NOM HEAT DISS 104	2.6	40	104	234

A (mm)	B (mm)	C (mm)
334	402	374
429	500	393
545	670	403
600	768	440
710	940	540
710	1041	589
916	1041	589

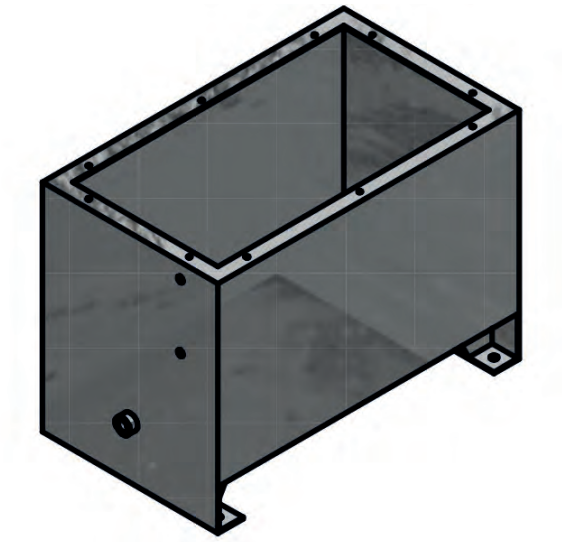

Hydraulic reservoir made from 3 mm mild steel plate.
Complete with mounting feet and holes for oil level site gauge.
Can be supplied either plain or painted RAL 5005 Blue.

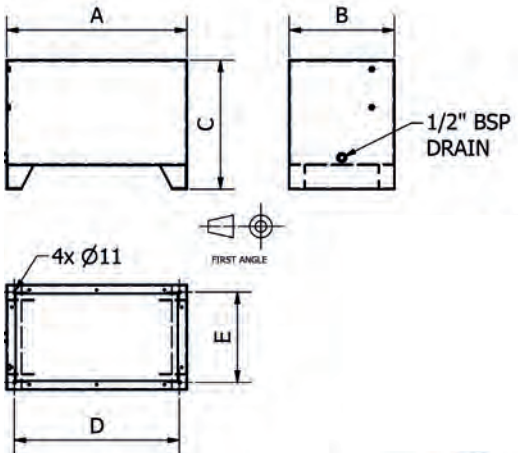

Ordering Chart

Part No.	Description	Level Gauge part no.	A (mm)	B (mm)	C (mm)	D (mm)	E (mm)
TANK10LP	10 LITRE TANK- PAINTED	LVA20	320	240	250	270	190
TANK10L	10 LITRE TANK- UNPAINTED	LVA20	320	240	250	270	190
TANK25LP	25 LITRE TANK- PAINTED	LVA20	450	300	300	400	250
TANK25L	25 LITRE TANK- UNPAINTED	LVA20	450	300	300	400	250
TANK50LP	50 LITRE TANK- PAINTED	LVA30	600	350	430	550	300
TANK50L	50 LITRE TANK- UNPAINTED	LVA30	600	350	430	550	300
TANK100LP	100 LITRE TANK- PAINTED	LVA30	600	500	500	550	450
TANK100L	100 LITRE TANK- UNPAINTED	LVA30	600	500	500	550	450
TANK150LP	150 LITRE TANK- PAINTED	LVA30	805	620	500	755	570
TANK150L	150 LITRE TANK- UNPAINTED	LVA30	805	620	500	755	570
TANK200LP	200 LITRE TANK- PAINTED	LVA30	825	600	600	775	550
TANK200L	200 LITRE TANK- UNPAINTED	LVA30	825	600	600	775	550

Tank lids

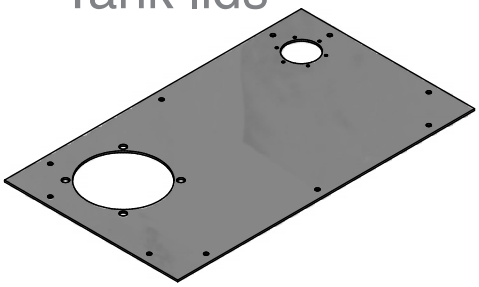

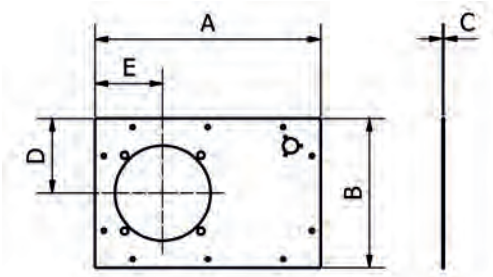

Reservoir lids made from 3mm or 5mm plate to suit our standard range of tanks.
Available plain or with motor cut out and supplied either plain or painted RAL 5005 Blue.

Ordering Chart

Part No.	Description	Frame size	Filler Breather Part no.	A (mm)	B (mm)	C (mm)	D (mm)	E (mm)
LID10LP	10 LITRE LID - PLAIN	N/A	TA46	320	240	3	N/A	N/A
LID25LP	25 LITRE LID - PLAIN	N/A	TA46	450	300	3	N/A	N/A
LID25L90	25 LITRE LID - D80/90	D80/90	TA46	450	300	3	135	120
LID25L100	25 LITRE LID - D100/112	D100/112	TA46	450	300	3	135	150
LID50LP	50 LITRE LID - PLAIN	N/A	TA80	600	350	3	N/A	N/A
LID50L90	50 LITRE LID - D80/90	D80/90	TA80	600	350	3	135	120
LID50L100	50 LITRE LID - D100/112	D100/112	TA80	600	350	3	135	150
LID100LP	100 LITRE LID - PLAIN	N/A	TA80	600	500	3	N/A	N/A
LID100L100	100 LITRE LID - D100/112	D100/112	TA80	600	500	3	135	150
LID100L132	100 LITRE LID - D132	D132	TA80	600	500	3	170	170
LID150LP	150 LITRE LID - PLAIN	N/A	TA80	805	550	3	N/A	N/A
LID150L132	150 LITRE LID - D132	D132	TA80	805	550	3	170	170
LID150L160	150 LITRE LID - D160/180	D160	TA80	805	550	5	200	200
LID200LP	200 LITRE LID - PLAIN	N/A	TA80	825	600	3	N/A	N/A
LID200L132	200 LITRE LID - D132	D132	TA80	825	600	5	180	180
LID200L160	200 LITRE LID - D160/180	D160	TA80	825	600	5	240	225
LID200L132P	STD 200L LID (D132) PAINTED	D132	TA80	825	600	5	180	180
LID200L160P	STD 200L LID (D160/180) PAINTED	D160/180	TA80	825	600	5	240	225

Note: Tank assemblies complete with rubber gasket. (Spares can be purchased from sales dept.)

Bell housing and coupling

Bell housing and coupling sets to suit our standard range of group 1, 2 and 3 gear pumps, coupled to B5 flanged electric motors.

Coupling Ordering Chart

Part No.	Description
AKG04FS100	DRIVE COUPLING D80-GRP 1
AKG04FS200	DRIVE COUPLING D80-GRP 2
AKG05FS100	DRIVE COUPLING D90-GRP 1
AKG05FS200	DRIVE COUPLING D90-GRP 2
AKG07FS100	DRIVE COUPLING D100/112-GRP 1
AKG07FS200	DRIVE COUPLING D100/112-GRP 2
AKG07FS300	DRIVE COUPLING D100/112-GRP 3
AKG11FS200	DRIVE COUPLING D132-GRP 2
AKG11FS300	DRIVE COUPLING D132-GRP 3
AKG12FS200	DRIVE COUPLING D160-GRP 2
AKG12FS300	DRIVE COUPLING D160-GRP 3
AKG13FS200	DRIVE COUPLING D180-GRP 2
AKG13FS300	DRIVE COUPLING D180-GRP 3

Note: Coupling suit pumps with 1:8 tapered shafts

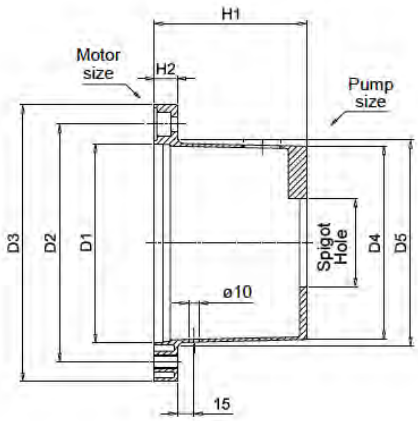

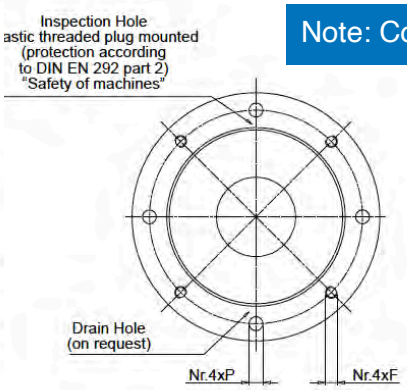

Bell housing ordering chart

Bell housing part no.	Description	Frame size	Motor shaft dimensions	Coupling part no.	D1 (mm)	D2 (mm)	D3 (mm)	D4 (mm)	D5 (mm)	H1 (mm)	H2 (mm)	F (mm)	P (mm)
LMC201MFS100	BELL HOUSING D80 GRP 1	80	19X40	AKG04FS100	130	165	200	125	135	100	18	M10	11
LMC201MFS200	BELL HOUSING D80 GRP 2	80	19X40	AKG04FS200	130	165	200	125	135	100	18	M10	12
LMC201MFS100	BELL HOUSING D90 GRP 1	90	24X50	AKG05FS100	130	165	200	125	135	100	18	M10	11
LMC201MFS200	BELL HOUSING D90 GRP 2	90	24X50	AKG05FS200	130	165	200	125	135	100	18	M10	12
LMC250MFS100	BELL HOUSING D100/112 GRP 1	100-112	28X60	AKG07FS100	180	215	250	175	186	114	19	M12	14
LMC250MFS200	BELL HOUSING D100/112 GRP 2	100-112	28X60	AKG07FS200	180	215	250	175	186	114	19	M12	15
LMC250MFS300E	BELL HOUSING D100/112 GRP 3	100-112	28X60	AKG07FS300	180	215	250	175	186	114	19	M12	16
LMC300MFS2004S	BELL HOUSING D132 GRP 2	132	38X80	AKG11FS200	230	265	300	230	235	155	23	M12	14
LMC300MFS3004E	BELL HOUSING D132 GRP 3	132	38X80	AKG11FS300	230	265	300	230	235	155	23	M12	15
LMC351MFS200	BELL HOUSING D160 GRP 2	160	42X110	AKG12FS200	250	300	350	240	245	178	31	M16	18
LMC351MFS3004S	BELL HOUSING D160 GRP 3	160	42X110	AKG12FS300	250	300	350	240	245	178	31	M16	19
LMC351MFS200	BELL HOUSING D180 GRP 2	180	48X110	AKG13FS200	250	300	350	240	245	194	31	M16	19
LMC351MFS3004S	BELL HOUSING D180 GRP 3	180	48X110	AKG13FS300	250	300	350	240	245	194	31	M16	20

Gasket ordering chart

Bell housing gasket part No.	Description	Frame size
BHG-200	BELL HOUSING GASKET TO SUIT 80/90 FRAME MOTOR	80/90
BHG-250	BELL HOUSING GASKET TO SUIT 100/112 FRAME MOTOR	100/112
BHG-300	BELL HOUSING GASKET TO SUIT 132 FRAME MOTOR	132
BHG-350	BELL HOUSING GASKET TO SUIT 160/180 FRAME MOTOR	160/180

FILLER BREATHER - TA 46

Tank mounted oil filler and air breather caps.

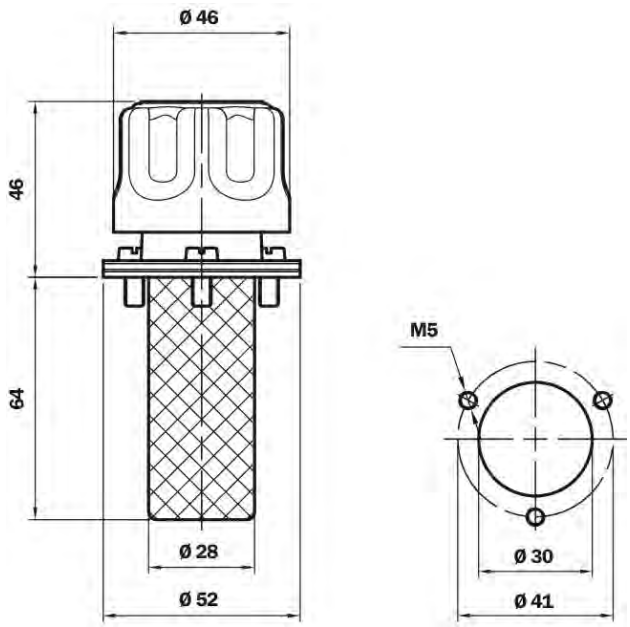

FILLER BREATHER - TA 80

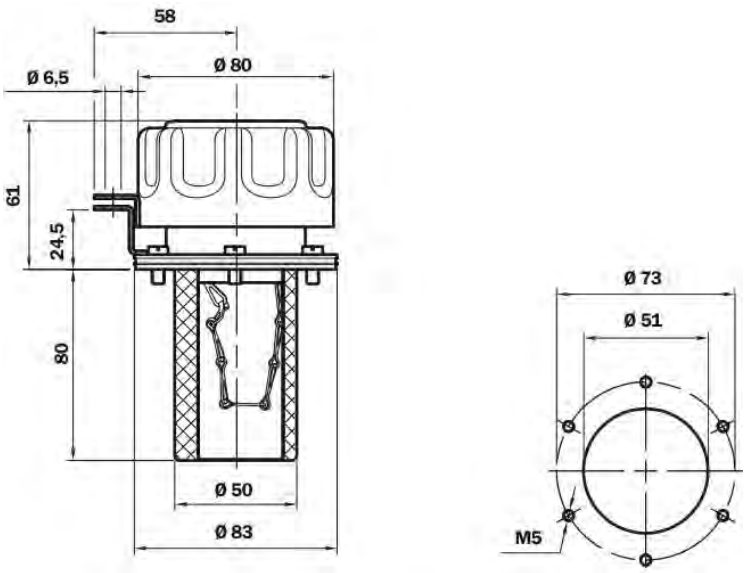

Ordering Chart

Part No.	Description
TA46B10A001P01	FILLER BREATHER, 10 MICRON, UN-PRESSURISED, 64 MM
TA80B10A001P01	FILLER BREATHER, 10 MICRON, UN-PRESSURISED, 80 MM

OIL LEVEL GAUGE

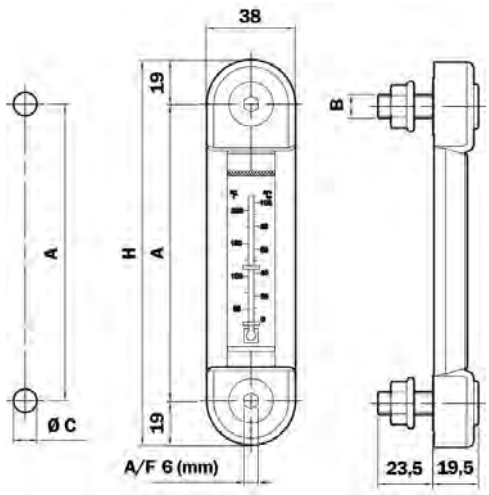

Oil level sight gauge with thermometer.

A (mm)	H (mm)	B (mm)
76	114	M10
127	165	M10
254	292	M10

Ordering Chart

Part No.	Description
LVA10TAPM10S01	OIL LEVEL GAUGE + THERMOMETER - 76MM - M10
LVA20TAPM10S01	OIL LEVEL GAUGE + THERMOMETER - 127MM - M10
LVA30TAPM10S01	OIL LEVEL GAUGE + THERMOMETER - 254MM - M10

PRESSURE GAUGE

63mm glycerin filled pressure gauge. ¼" BSP connection calibration PSI- bar.

Type	A	B	C	D	E	F	G	CH
MGR 63	63	84.5	37	53	1/4'	12	12	160L

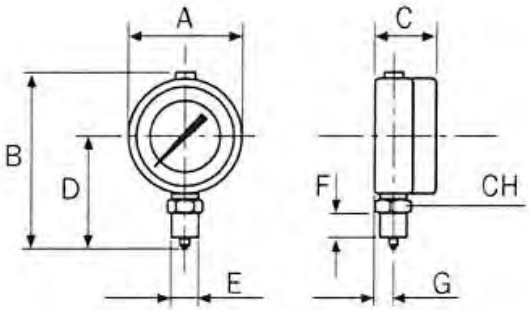

Ordering Chart

Part No.	Description	Pressure range (bar)
MGR63G10	63MM STEM MOUNTED PRESSURE GAUGE 0-10 BAR	0-10
MGR63G25	63MM STEM MOUNTED PRESSURE GAUGE 0-25 BAR	0-25
MGR63G40	63MM STEM MOUNTEDPRESSURE GAUGE 0-40 BAR	0-40
MGR63G100	63MM STEM MOUNTED PRESSURE GAUGE 0-100 BAR	0-100
MGR63G160	63MM STEM MOUNTED PRESSURE GAUGE 0-160 BAR	0-160
MGR63G250	63MM STEM MOUNTED PRESSURE GAUGE 0-250 BAR	0-250
MGR63G400	63MM STEM MOUNTED PRESSURE GAUGE 0-400 BAR	0-400
MGR63G600	63MM STEM MOUNTED PRESSURE GAUGE 0-600 BAR	0-600

ISOLATOR

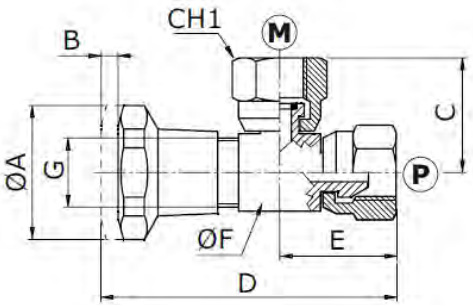

Ordering Chart

Part No.	Description	Pressure (bar)
EM9001C	GAUGE ISOLATOR 90DEG WITH 1/4" FEM SWIVEL	350

P (mm)	M (mm)	A (mm)	B (mm)	C (mm)	D (mm)	E (mm)	F (mm)	G (mm)	CH1	CH2
G1/4	G1/4	32-1.26	4-0.157	26.5-1.04	62-2.44	26-1.02	19-0.75	M16X1.5	19	22

PRESSURE TEST KIT - BSP 1620

Test under pressure using leak free minimess connections up to 630 bar. In-line test point tees offer excellent system access and versatility.

KITS CONTAIN:

- 2 x 63mm glycerine filled pressure gauges user selectable up to 400 bar.
- 3 x Minimess™ Male/Swivel Female 1620 inline test point adaptors. 1/4", 3/8" & 1/2" BSP.
- 1 x Minimess™ 1620 test point - 1/4" BSP.
- 1 x G1/4" BSP to 1620 gauge adaptor.
- 1 x 630 bar rated Minimess™ pressure test hose - 1.5 meters long.
- Additional 3/8" & 1/2" BSP male threaded adaptors & seals.

PRESSURE RATING: UP TO 630 BAR

Part No.	Description
3101-16-37.50	PRESSURE TEST KIT WITH 0 to 40 & 280 BAR GAUGES
3101-16-38.50	PRESSURE TEST KIT WITH 0 to 40 & 400 BAR GAUGES
3101-16-57.50	PRESSURE TEST KIT WITH 0 to 100 & 280 BAR GAUGES
3101-16-58.50	PRESSURE TEST KIT WITH 0 to 100 & 400 BAR GAUGES
3101-16-66.50	PRESSURE TEST KIT WITH 2 x 0-170 BAR GAUGES
3101-16-67.50	PRESSURE TEST KIT WITH 0 to 170 & 280 BAR GAUGES
3101-16-68.50	PRESSURE TEST KIT WITH 0 to 170 & 400 BAR GAUGES
3101-16-88.50	PRESSURE TEST KIT WITH 2 x 0-400 BAR GAUGES

MICRO BORE TEST HOSE

The micrbore high pressure hose, most commonly used to connect to a minimess test point for pressure testing, has many diverse applications. The microbore hose assembly is extremely flexible, light weight and is suitable for pressures up to 400 bar. Manufactured to length with an M16 x 2 gauge connection.

Part No.	Description	Max. pressure (bar)
SMS20-300A	300MM TEST HOSE - 400 BAR	400
SMS20-500A	500MM TEST HOSE - 400 BAR	
SMS20-1000A	1000MM TEST HOSE - 400 BAR	
SMS20-1500A	1500MM TEST HOSE - 400 BAR	
SMS20-2000A	2000MM TEST HOSE - 400 BAR	

TEST POINTS

Minimess test points (also known as Test 20) have a unique M16x2 threaded test connection. This is the most common test point.

Part No.	Description	Max. pressure (bar)
SMK20-G1/8-PC	1/8" BSP PRESSURE TEST POINT	400
SMK20-G1/4-PC	1/4" BSP PRESSURE TEST POINT	630
SMK20-G3/8-PC	3/8" BSP PRESSURE TEST POINT	630

Note: available in a wide variety of connection threads, body materials & sealing options.

Aluminium & cast iron housed 3 phase 415 v 4 pole electric motors from D80 - D180 frames manufactured to IEC standards.

H (mm)	AD (mm)	L (mm)	AA (mm)	A (mm)	B (mm)	E (mm)	D (mm)	AC (mm)
80	213	290	160	125	100	40	19	163
80	213	290	160	125	100	40	19	163
90	229	312	175	140	100/125	50	24	183
90	229	312	175	140	100/125	50	24	183
100	252	369	198	160	140	60	28	205
100	252	369	198	160	140	60	28	205
112	279	395	220	190	140	60	28	229
132	318	437	252	216	104/178	80	38	265
132	318	437	252	216	140/178	80	38	265
160	384	640	290	254	210/254	110	42	324
160	384	640	290	254	210/254	110	42	324
180	440	730	340	279	241/279	110	48	368
180	440	730	340	279	241/279	110	48	368

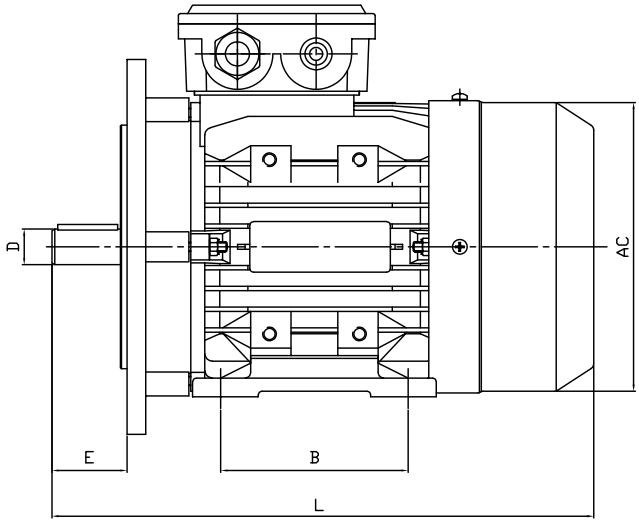

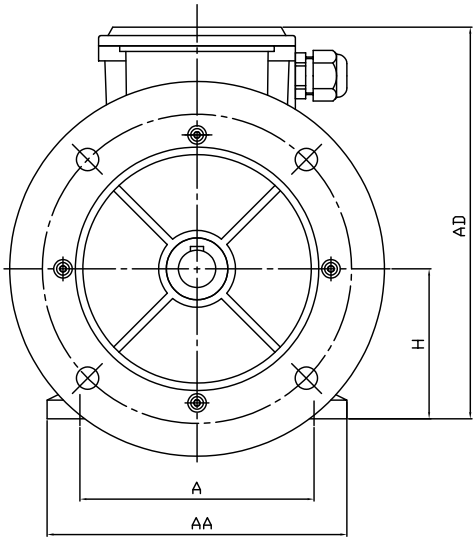

Ordering Chart

Part No.	Description	Frame size	Power (kW)
0.5543TECA3-B35	0.55kW 415V 3PH 4-POLE ELECTRIC MOTOR FLANGE MTD	80	0.55kW
0.7543TECA3-B35	0.75kW 415V 3PH 4-POLE ELECTRIC MOTOR FLANGE MTD	80	0.75kW
1.143TECA3-B35	1.1kW 415V 3PH 4-POLE ELECTRIC MOTOR FLANGE MTD	90S/L	1.1kW
1.543TECA3-B35	1.5kW 415V 3PH 4-POLE ELECTRIC MOTOR FLANGE MTD	90S/L	1.5kW
2.243TECA3-B35	2.2kW 415V 3PH 4-POLE ELECTRIC MOTOR FLANGE MTD	100	2.2kW
3.043TECA3-B35	3.0kW 415V 3PH 4-POLE ELECTRIC MOTOR FLANGE MTD	100	3.0kW
4.043TECA3-B35	4.0kW 415V 3PH 4-POLE ELECTRIC MOTOR FLANGE MTD	112	4.0kW
5.543TECA3-B35	5.5kW 415V 3PH 4-POLE ELECTRIC MOTOR FLANGE MTD	132S/M	5.5kW
7.543TECA3-B35	7.5kW 415V 3PH 4-POLE ELECTRIC MOTOR FLANGE MTD	132S/M	7.5kW
11.043TECA3-B35	11kW 415V 3PH 4-POLE ELECTRIC MOTOR FLANGE MTD	160M/L	11kW
15.043TECA3-B35	15kW 415V 3PH 4-POLE ELECTRIC MOTOR FLANGE MTD	160M/L	15kW
18.543TECC3-B35	18.5kW 415V 3PH 4-POLE ELECTRIC MOTOR FLANGE MTD	180M/L	18.5kW
22.043TECC3-B35	22kW 415V 3PH 4-POLE ELECTRIC MOTOR FLANGE MTD	180M/L	22kW

Hydrastore
Hydraulic Systems & Components

Online shop now open

Every stock item in this catalogue is now available online for next day delivery www.hydrastore.co.uk/shop

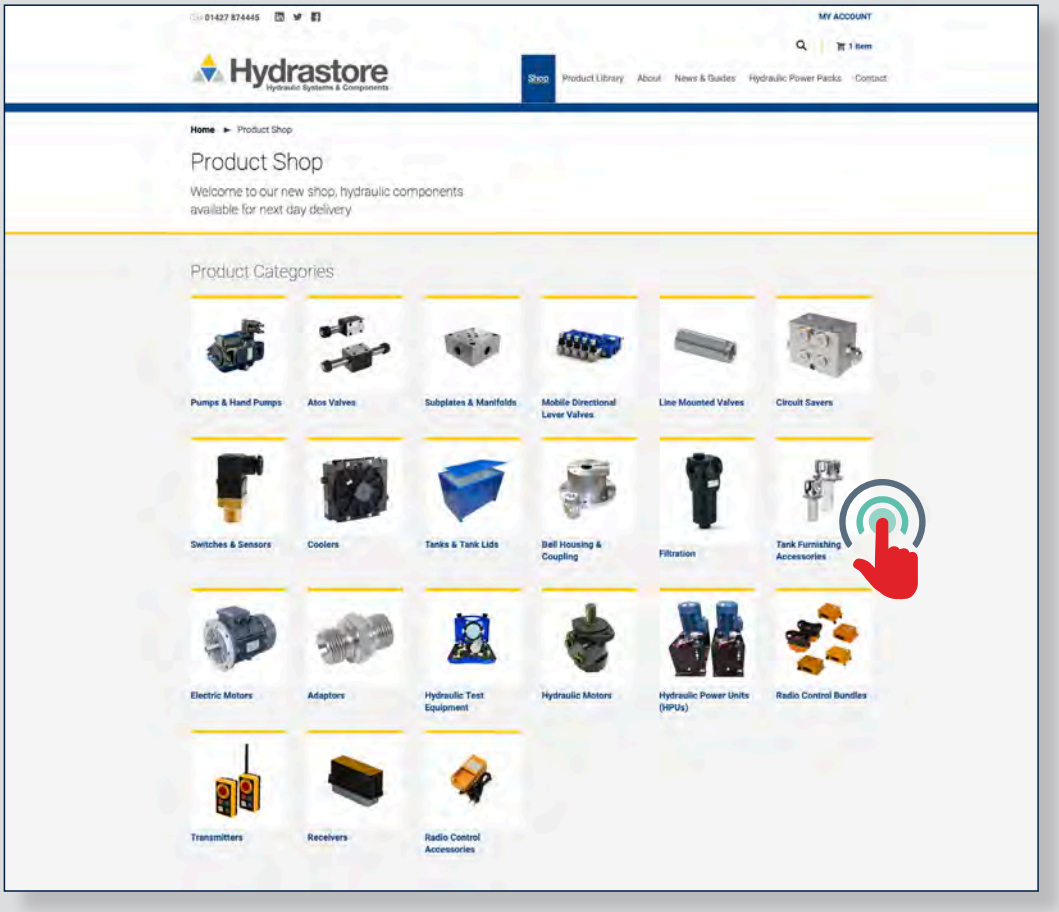

The main index menu is designed and categorised for quick and easy product selection...

Select 'Tank Furnishing Accessories'

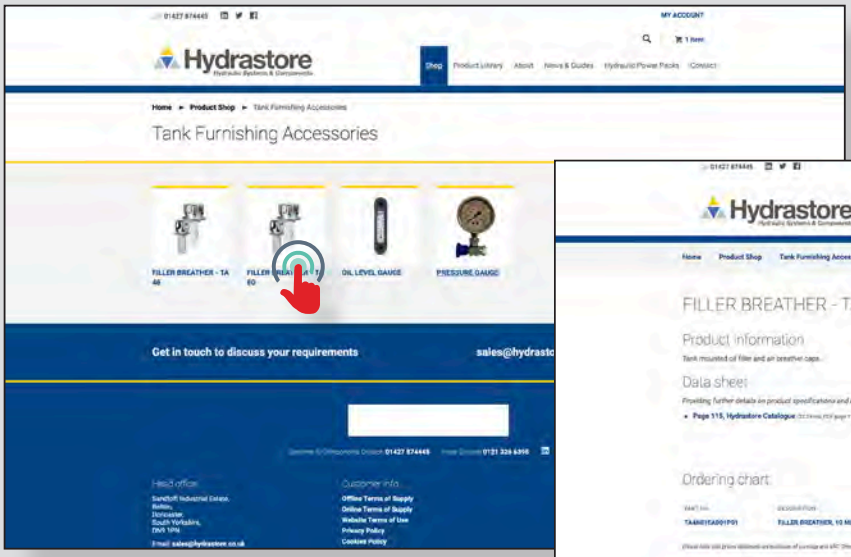

Select the item you need...

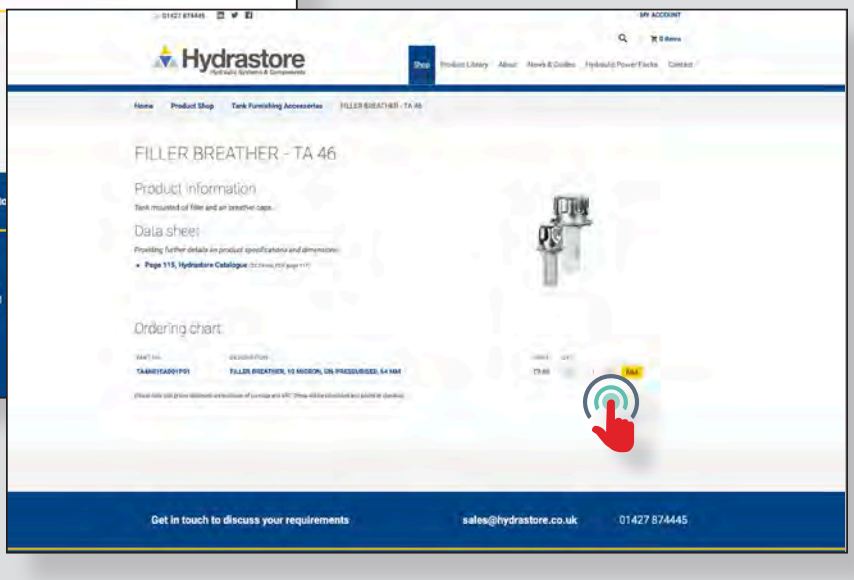

Select quantity, add to basket, checkout delivered!

Filtration

FSS SUCTION FILTER 130

FPS PRESSURE FILTER 131
ELECTRICAL OR VISUAL INDICATOR OPTIONS 133
REPLACEMENT PRESSURE FILTER ELEMENTS 134

FRS10 RETURN LINE FILTER 135
FRS20 RETURN LINE FILTER 136
FRS30 RETURN LINE FILTER 137
REPLACEMENT RETURN LINE FILTER ELEMENTS 138
RETURN LINE CLOGGING INDICATORS 138
OPTIONAL DISCHARGE ENDING PIPE, CONNECTING ENDING PIPE, DIFFUSER FOR FRS-20 AND FRS-30 (NOT FRS-10) 138
LINE MOUNTED RETURN LINE FILTER 139

FSS SUCTION FILTER

Suction filters are designed to protect pumps from ingestion of solid particles and coarse contamination present in the oil tank which may cause heavy damage and seizures.

They are designed to be screwed onto the pump's suction line.

FSS filters are available with the following features:
- Four sizes with BSPP threaded ports from ½" to 3"
- Wire mesh 125 um (c)

Max flow 450 l/min

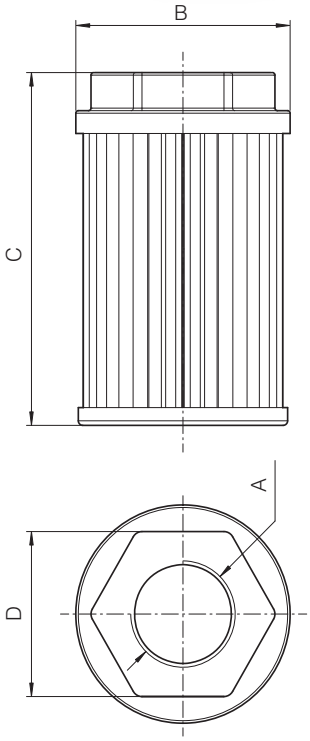

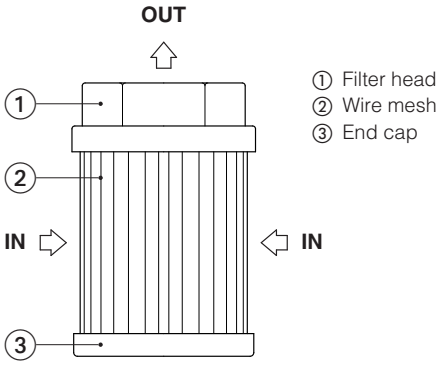

FSS-20-*

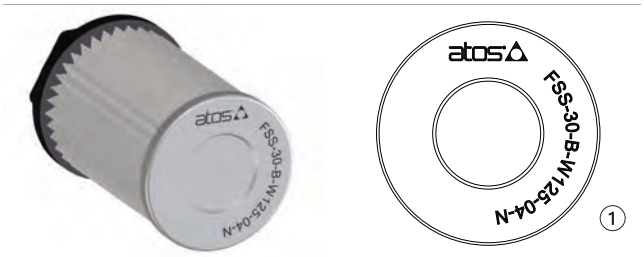

Ordering Chart

Part No	Description	A (BSPP)	B	C	D	Weight (kg)	Max Flow (lpm)
FSS-10-A-W125-00-N	½" BSPP SUCTION FILTER, 125 MICRON	½"	46	106	36	0.1	20
FSS-20-A-W125-01-N	¾" BSPP SUCTION FILTER, 125 MICRON	¾"	64	109	50	0.19	38
FSS-20-B-W125-02-N	1" BSPP SUCTION FILTER, 125 MICRON	1"		139		0.21	60
FSS-30-A-W125-03-N	1 ¼" BSPP SUCTION FILTER, 125 MICRON	1 ¼"	86		65	0.33	85
FSS-30-B- W125-04-N	1 ½" BSPP SUCTION FILTER, 125 MICRON	1 ½"		200		0.24	125
FSS-30-C-W125-05-N	2" BSPP SUCTION FILTER, 125 MICRON	2"		260	75	0.51	200
FSS-40-B-W125-07-N	3" BSPP SUCTION FILTER, 125 MICRON	3"	150	272	110	0.92	450

Note: Flow rates based upon mineral oil with viscosity 32 mm2/s

FPS PRESSURE FILTER

In line filters are designed for installation of the pressure line downstream the pump, to ensure a high cleanliness of the fluid circulating into the hydraulic system. Particularly recommended for systems with proportional valves.

- Two head sizes
- Port sizes G ½ ” to G 1 ¼ ”
- Filtration Plus microfiber elements ensure high efficiency, low pressure drop, high DHC and long lasting performance. Collapse pressure 21 bar.
- Filtration rating 7 – 12 – 22 micron
- Higher efficiency β x (c) > 1000 rating
- By-pass valve with cracking pressure 6 bar
- Optional electrical or visual clogging indicator

Max flow 205 l/min
Max working pressure 420 bar

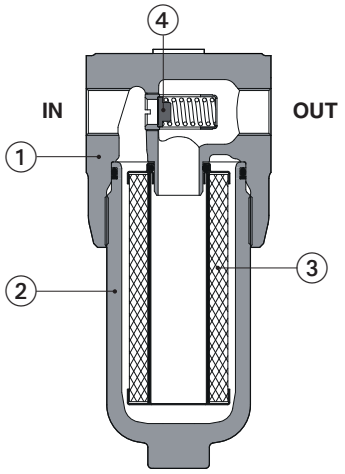

1 Filter head
2 Filter bowl
3 Filter element
4 By-pass valve

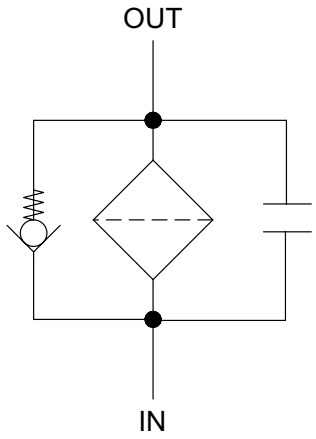

Ordering Chart

Part No.	Description	Max. flow
FPS-10-A-F06-00-R-P	1/2” BSP PRESSURE FILTER, 7 MICRON	48
FPS-10-A-F10-00-R-P	1/2” BSP PRESSURE FILTER, 12 MICRON	63
FPS-10-A-F20-00-R-P	1/2” BSP PRESSURE FILTER, 22 MICRON	78
FPS-10-B-F06-01-R-P	3/4” BSP PRESSURE FILTER, 7 MICRON	79
FPS-10-B-F10-01-R-P	3/4” BSP PRESSURE FILTER, 12 MICRON	92
FPS-10-B-F20-01-R-P	3/4” BSP PRESSURE FILTER, 22 MICRON	101
FPS-20-A-F06-02-R-P	1” BSP PRESSURE FILTER, 7 MICRON	100
FPS-20-A-F10-02-R-P	1” BSP PRESSURE FILTER, 12 MICRON	135
FPS-20-A-F20-02-R-P	1” BSP PRESSURE FILTER, 22 MICRON	166
FPS-20-B-F06-03-R-P	1 1/4” BSP PRESSURE FILTER, 7 MICRON	127
FPS-20-B-F10-03-R-P	1 1/4” BSP PRESSURE FILTER, 12 MICRON	170
FPS-20-B-F20-03-R-P	1 1/4” BSP PRESSURE FILTER, 22 MICRON	205

Note: Flow rates based upon mineral oil with viscosity 32 mm2/s

Note: For replacement filter elements and clogging indicators see p134

FPS-10

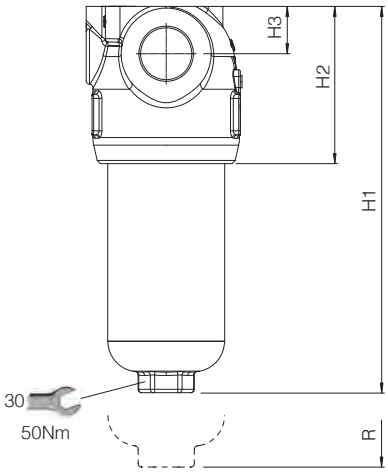

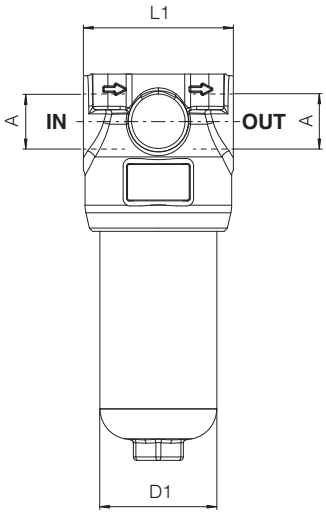

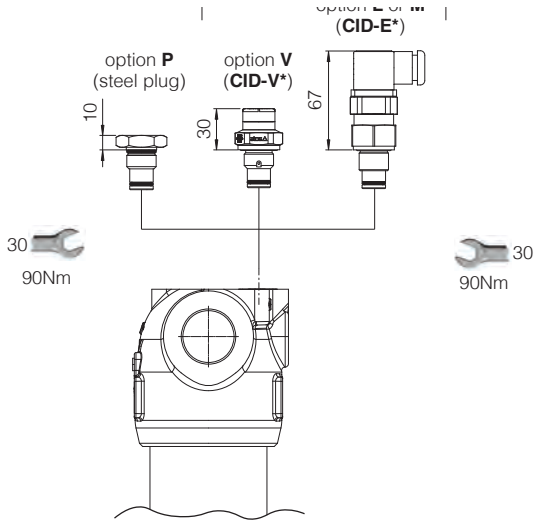

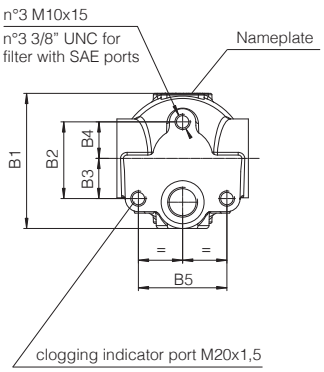

Code	A	B1	B2	B3	BE	B5	D1	H1	H2	H3	L1	R (element removal)	Mass (Kg)
FPS-10-A	1/2" BSP 3/4" BSP	94	53	28	25	61	70	203	93	28	90	110	4
FPS-10-B								296					5

FPS-20

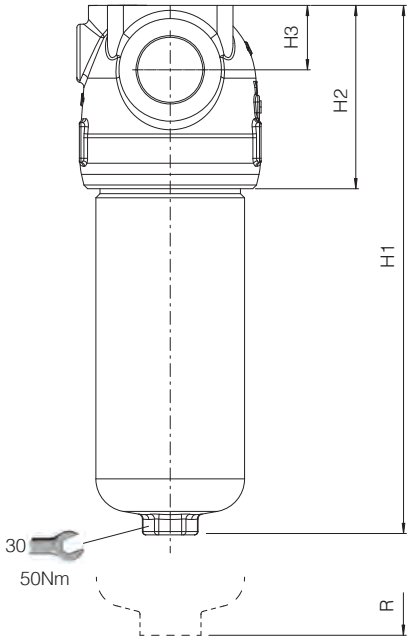

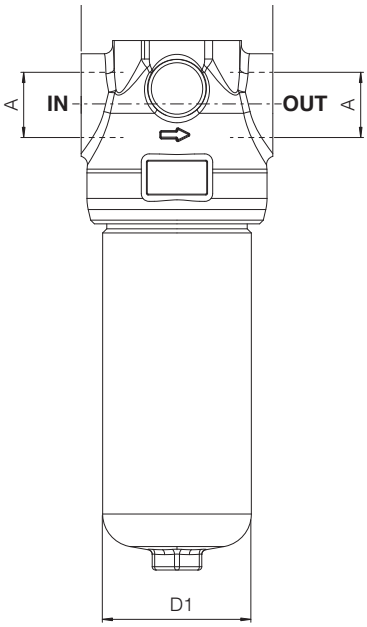

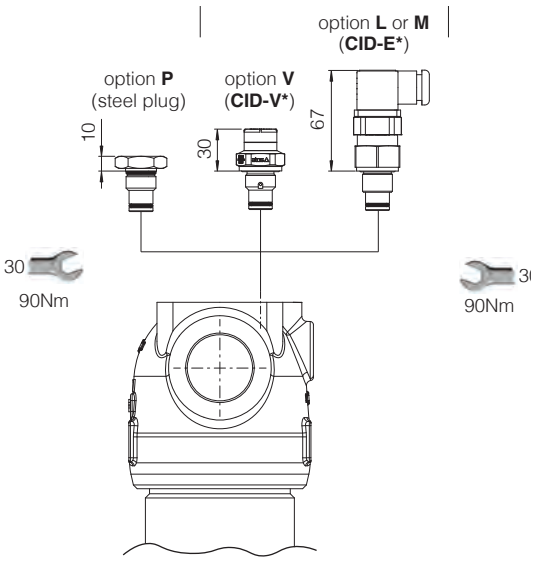

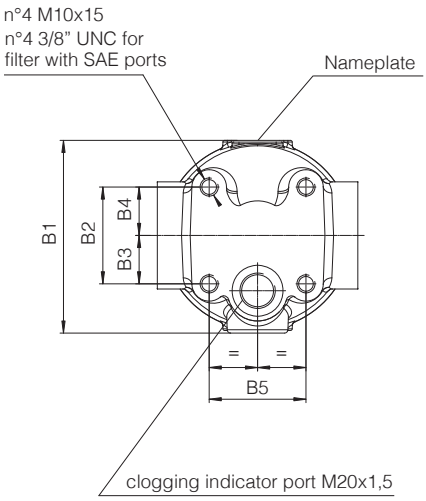

Code	A	B1	B2	B3	BE	B5	D1	H1	H2	H3	L1	R (element removal)	Mass (Kg)
FPS-20-A	1" BSP 1 1/4" BSP	112	56	28	28	56	90	261	111	39	116	120	7.4
FPS-20-B								320					8.5

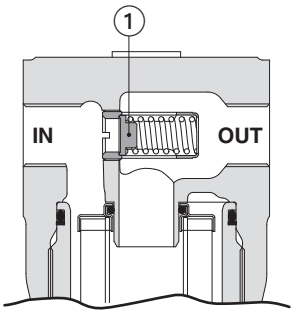

FPS-*-R

By-pass valve allows the oil flow to by-pass the filter elements in certain conditions.

Hydrastore
Hydraulic Systems & Components

ELECTRICAL OR VISUAL INDICATOR OPTIONS

Part No.	Description
CID-E05-M	ELECTRICAL INDICATOR FOR PRESSURE FILTER
CID-V05	VISUAL INDICATOR FOR PRESSURE FILTER

Model code		**CID-E* ELECTRICAL**		**CID-V* VISUAL**
Differential switching pressure	CID-E05, CID-V05	5 bar ± 10%		5 bar ± 15%
	CID-E08, CID-V08	8 bar ± 10%		8 bar ± 10%
Max pressure		450 bar		420 bar
Max differential pressure		200 bar		
Ambient temperature		-25°C ÷ +100°C		-25°C ÷ +80°C
Hydraulic connection		M20x1,5		
Duty factor		100%		
Mechanical life		1 x 10^6 operations		
Mass (Kg)		0,16		0,11
Electric connection		Electric plug connection as per DIN 43650 with cable gland type PG7		-
Power supply	CID-E05-L, CID-E08-L	24 VDC ± 10%		-
	CID-E05-M, CID-E08-M	14 VDC ÷ 30 VDC	125 VAC ÷ 250 VAC	-
Max current - resistive (inductive)		5 A (4 A) ÷ 4 A (3 A)	5 A (3 A) ÷ 3 A (2 A)	-
Protection degree to DIN EN 60529		IP65 with mating connector		-

ELECTRICAL INDICATOR

CID-E05-L
CID-E08-L

Electric connector
DIN 43650
Transparent
with internal Led

CID-E05-M
CID-E08-M

Electric connector
DIN 43650
Black colour

Led signal:
Green = clean filter element
Red = clogged filter element
(filter elements to be replaced)

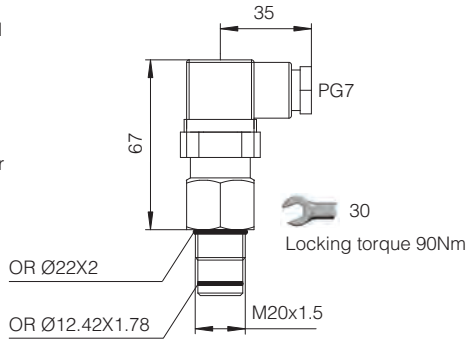

VISUAL INDICATOR

CID-V05
CID-V08

Visual signal:
Green = clean filter element
Red = clogged filter element
(filter elements to be replaced)

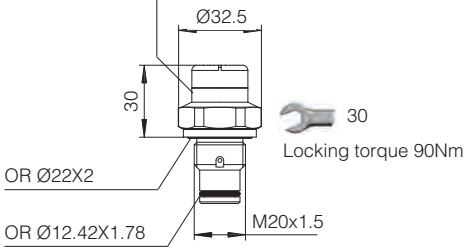

REPLACEMENT PRESSURE FILTER ELEMENTS

- Higher efficiency β x (c) > 1000 rating
- Higher flow rate at the same △p
- Dirt holding capacity increased up to 30% for a longer operating life

Ordering Chart

Part No.	Description
PSH-10-A-F06-R	FPS-10-A FILTER ELEMENT, 7 MICRON
PSH-10-A-F10-R	FPS-10-A FILTER ELEMENT, 12 MICRON
PSH-10-A-F20-R	FPS-10-A FILTER ELEMENT, 22 MICRON
PSH-10-B-F06-R	FPS-10-B FILTER ELEMENT, 7 MICRON
PSH-10-B-F10-R	FPS-10-B FILTER ELEMENT, 12 MICRON
PSH-10-B-F20-R	FPS-10-B FILTER ELEMENT, 22 MICRON
PSH-20-A-F06-R	FPS-20-A FILTER ELEMENT, 7 MICRON
PSH-20-A-F10-R	FPS-20-A FILTER ELEMENT, 12 MICRON
PSH-20-A-F20-R	FPS-20-A FILTER ELEMENT, 22 MICRON
PSH-20-B-F06-R	FPS-20-B FILTER ELEMENT, 7 MICRON
PSH-20-B-F10-R	FPS-20-B FILTER ELEMENT, 12 MICRON
PSH-20-B-F20-R	FPS-20-B FILTER ELEMENT, 22 MICRON

FRS10 RETURN LINE FILTER

Return filters are designed to ensure cleanliness of fluid back to the tank from contamination collected downstream of the hydraulic circuit.

- Tank top mounted
- Port size G½”
- By-pass valve with cracking pressure 3 bar
- Filtration Plus microfiber filter elements ensure low pressure drop, high dirt holding capacity and long lasting performance
- Filtration rating 12 or 27 micron options

Max flow 40 l/min
Max working pressure 8 bar

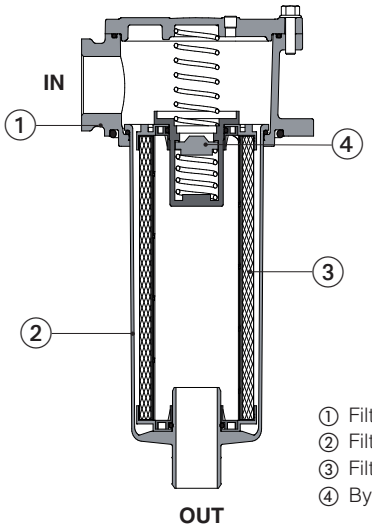

① Filter head
② Filter bowl
③ Filter element
④ By-pass valve

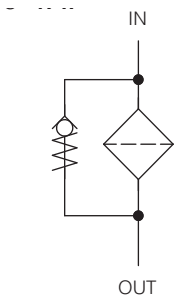

Ordering Chart

Part No.	Description	Max. flow (lpm)
FRS-10-A-F10-00-R-W	1/2” BSP RETURN LINE FILTER- 12 MICRON-W/O IND	24
FRS-10-A-F25-00-R-W	1/2” BSP RETURN LINE FILTER - 27 MICRON - W/O IND	40

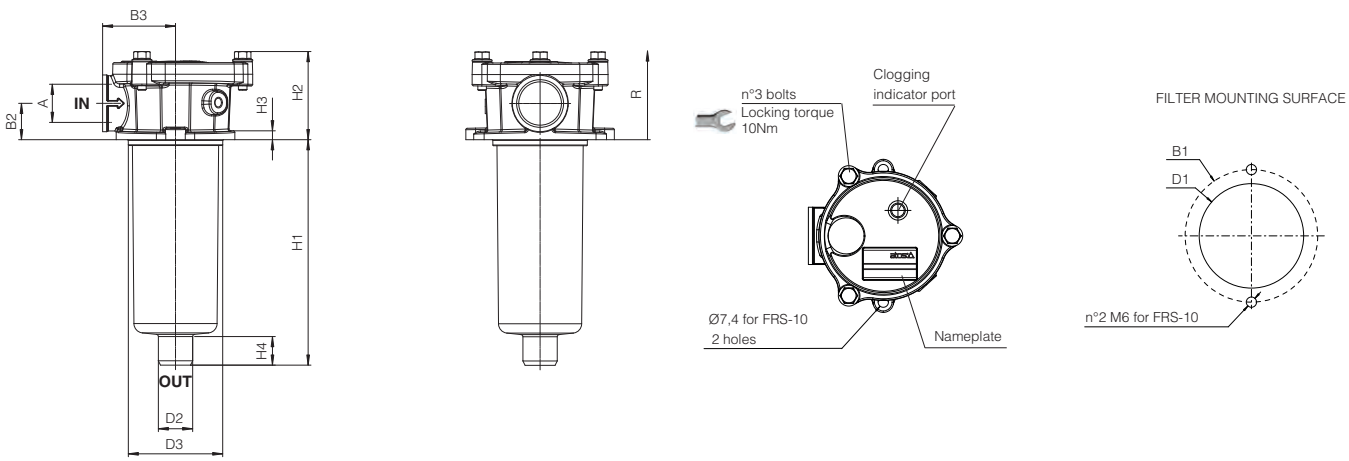

Code	A	B1	B2	B3	D1	D2	D3	H1	H2	H3	H4	R (element removal)	Mass (Kg)
FRS-10-A	1/2” BSPP	89	25	51	67.5	24	67	82	60	8	22	150	0.45

Note: For replacement filter elements and clogging indicators see p 138

Hydrastore
Hydraulic Systems & Components

FRS20 RETURN LINE FILTER

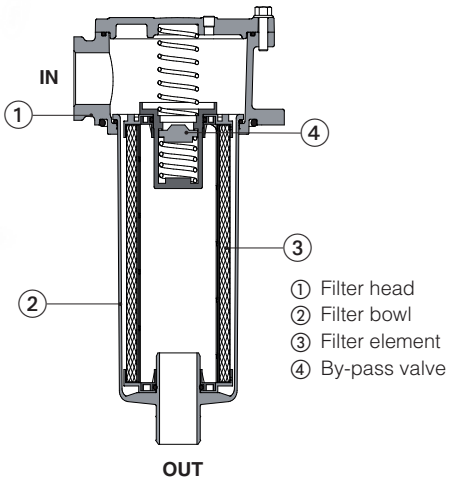

atos

Return filters are designed to ensure cleanliness of fluid back to the tank from contamination collected downstream of the hydraulic circuit.

- Tank top mounted

Port size G1/2", G3/4", G1"

- By-pass valve with cracking pressure 3 bar
- Filtration Plus microfiber filter elements ensure low pressure drop, high dirt holding capacity and long lasting performance
- Filtration rating 12 or 27 micron options

Max flow 100 l/min
Max working pressure 8 bar

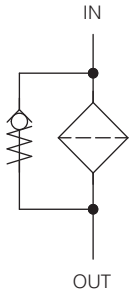

Ordering Chart

Part No.	Description	Max. flow (lpm)
FRS-20-B-F25-00-R-W	1/2"BSP RETURN LINE FILTER-25 MICRON-W/O IND	79
FRS-20-A-F10-01-R-W	3/4" BSP RETURN LINE FILTER-12 MICRON-W/O IND	52
FRS-20-A-F25-01-R-W	3/4" BSP RETURN LINE FILTER-27 MICRON-W/O IND	67
FRS-20-B-F10-01-R-W	3/4" BSP RETURN LINE FILTER-12 MICRON-W/O IND	77
FRS-20-B-F25-01-R-W	3/4" BSP RETURN LINE FILTER-27 MICRON-W/O IND	97
FRS-20-B-F10-02-R-W	1" BSP RETURN LINE FILTER-12 MICRON-W/O IND	78
FRS-20-B-F25-02-R-W	1" BSP RETURN LINE FILTER-27 MICRON-W/O IND	100

Note: Flow rates based upon mineral oil with viscosity 32 mm2/s

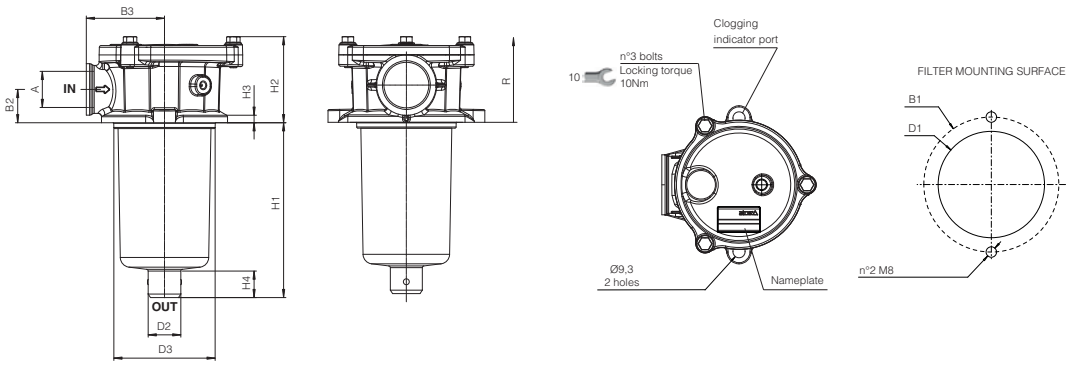

Code	A	B1	B2	B3	D1	D2	D3	H1	H2	H3	H4	R (element removal)	Mass (Kg)
FRS-20-A	3/4" BSP 1" BSP	115	28.5	67	88.5	40	87	92	73	11	24	170	0.80
FRS-20-B								139				220	0.90

Note: For replacement filter elements and clogging indicators see p138

FRS30 RETURN LINE FILTER

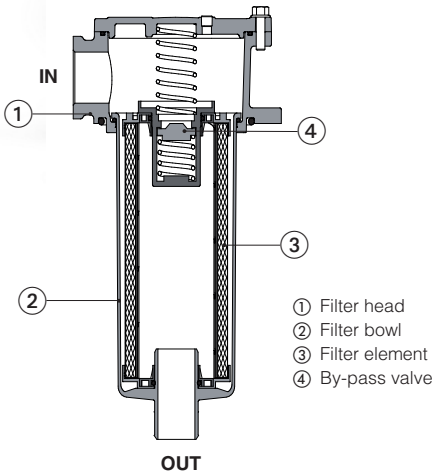

Return filters are designed to ensure cleanliness of fluid back to the tank from contamination collected downstream of the hydraulic circuit.

- Tank top mounted
- Port size G1 1/4”
- By-pass valve with cracking pressure 3 bar
- Filtration Plus microfiber filter elements ensure low pressure drop, high dirt holding capacity and long lasting performance
- Filtration rating 12 or 27 micron options

Max flow 270 l/min
Max working pressure 8 bar

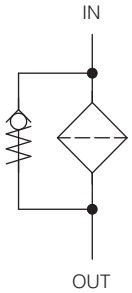

Ordering Chart

Part No.	Description	Max. flow (lpm)
FRS-30-A-F10-03-R-W	1 1/4” BSP RETURN LINE FILTER-12 MICRON-W/O IND	230
FRS-30-A-F25-03-R-W	1 1/4” BSP RETURN LINE FILTER-27 MICRON-W/O IND	270

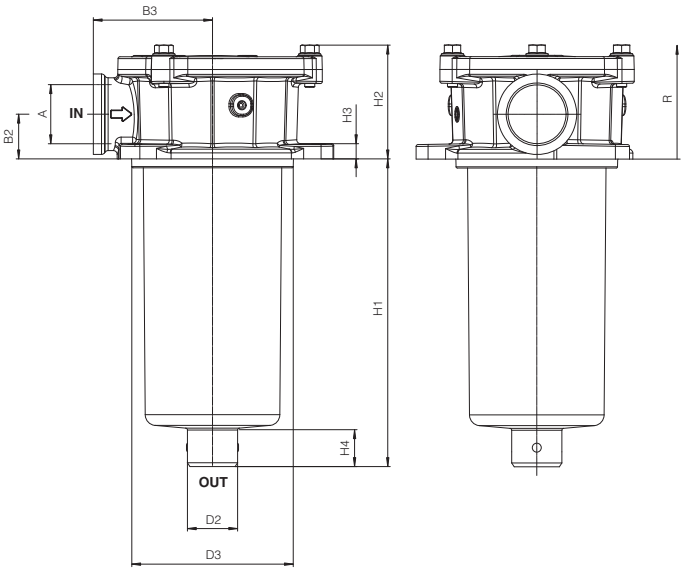

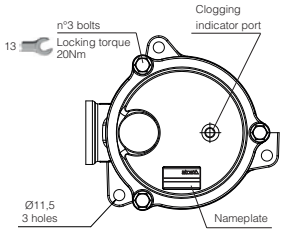

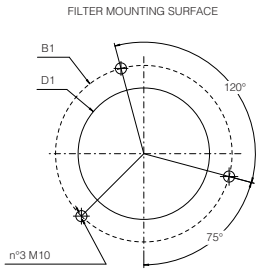

Code	A	B1	B2	B3	D1	D2	D3	H1	H2	H3	H4	R (element removal)	Mass (Kg)
FRS-30-A	1 1/4” BSP	175	35	95	130	40	129	234	90	11	30	320	2.10

Note: For replacement filter elements and clogging indicators see p138

Hydrastore
Hydraulic Systems & Components

REPLACEMENT RETURN LINE FILTER ELEMENTS

- Higher efficiency β x (c) > 1000 rating
- Higher flow rate at the same △p
- Dirt holding capacity increased up to 30% for a longer operating life

Ordering Chart

Part No.	Description
PRS-10-A-F10	FRS-10 FILTER ELEMENT - 12 MICRON
PRS-10-A-F25	FRS-10 FILTER ELEMENT - 27 MICRON
PRS-20-A-F10	FRS-20 FILTER ELEMENT - 12 MICRON
PRS-20-A-F25	FRS-20 FILTER ELEMENT - 27 MICRON
PRS-20-B-F10	FRS-20 FILTER ELEMENT - 12 MICRON
PRS-20-B-F25	FRS-20 FILTER ELEMENT - 27 MICRON
PRS-30-A-F10	FRS-30 FILTER ELEMENT - 12 MICRON
PRS-30-A-F25	FRS-30 FILTER ELEMENT - 27 MICRON

RETURN LINE CLOGGING INDICATORS

Ordering Chart

Part No.	Description
CIA-E	ELECTRICAL INDICATOR FOR ATOS FILTER
CIA-V	VISUAL INDICATOR FOR ATOS FILTER

Model code	CIA-E electrical		CIA-V visual
Switching pressure	2 bar		green sector = 0 ÷ 3 bar red sector = 3 ÷ 10 bar
Switching tolerance at 20°C	± 10% of switching pressure		-
Electric connection	Electric plug connection as per DIN 43650 with cable gland type PG7		-
Power supply	14 VDC ÷ 30 VDC	125 VAC ÷ 250 VAC	
Max current - resistive (inductive)	4 A (3 A) ÷ 3 A (2 A)	5 A (3 A) ÷ 3 A (2 A)	
Fluid temperature	-25°C ÷ +100°C		-25°C ÷ +100°C
Protection degree according to DIN 40050	IP65 with mating connector		-
Hydraulic connection	G1/8" BSP		G1/8" BSP
Duty factor	100%		100%
Mass (Kg)	0,16		0,04
Electric scheme / Hydraulic symbol	1 C, 2 NC, 3 NO The electric scheme shows the switch position in case of clean filter element		

CIA-E

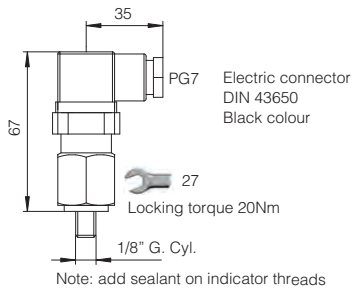

CIA-V

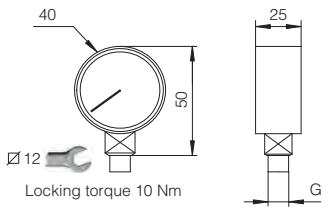

OPTIONAL DISCHARGE ENDING PIPE, CONNECTING ENDING PIPE, DIFFUSER FOR FRS-20 AND FRS-30 (NOT FRS-10)

Ordering Chart

Part No.	Description
DSC-END-250FRS-20/30	DISCHARGE PIPE 250MM FOR FRS20/30
CONN-END-250FRS20/30	CONNECTING ENDING PIPE 250MM FOR FRS-20/30
DIFF-FRS-20/30	DIFFUSER FOR FRS-20/30

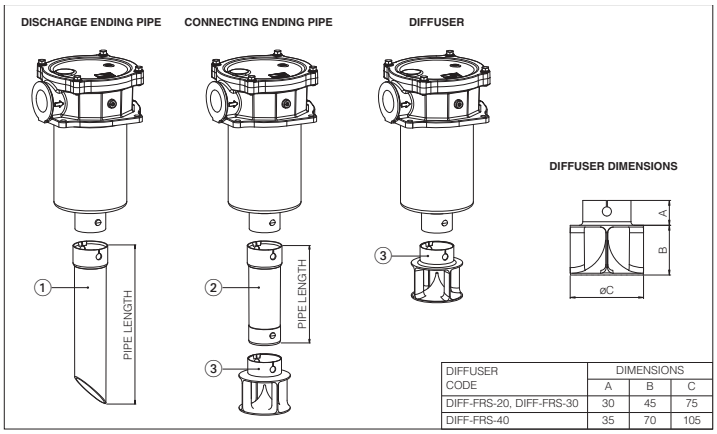

DIFFUSER CODE	DIMENSIONS		
	A	B	C
DIFF-FRS-20, DIFF-FRS-30	30	45	75
DIFF-FRS-40	35	70	105

LINE MOUNTED RETURN LINE FILTER

Line mounted return line filter with spin on can and visual indicator. ¾ BSP female ports.

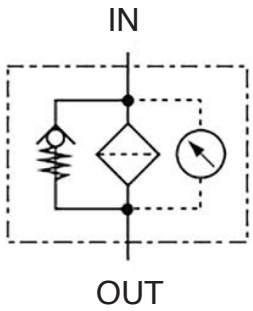

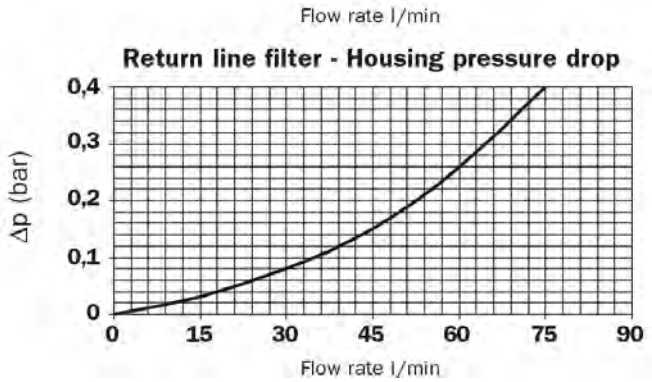

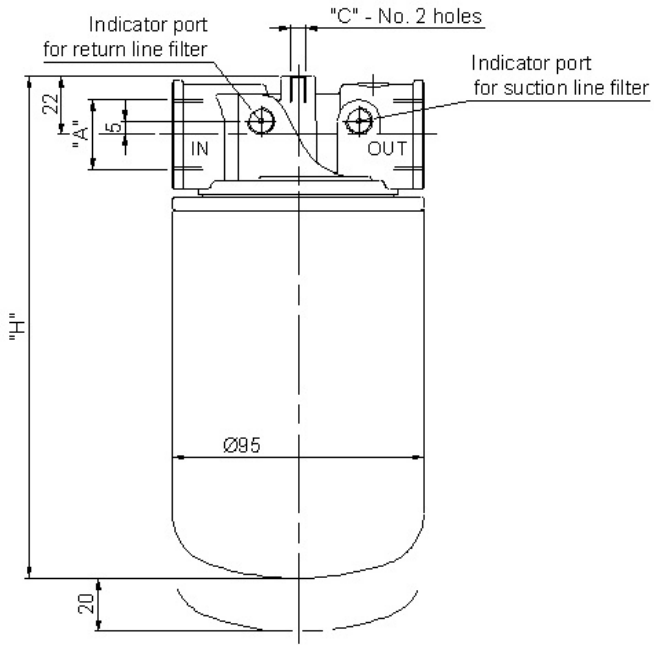

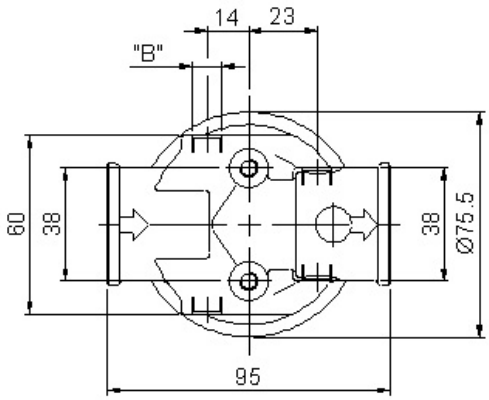

Ordering Chart

Part No.	Description	Max. flow (lpm)	H (mm)	Size (BSP)
MPS050RG1A03AP01	LINE MOUNTED RETURN LINE FILTER, 3 MICRON	40	192	¾”
MPS050RG1A06AP01	LINE MOUNTED RETURN LINE FILTER, 6 MICRON	44	192	¾”
MPS050RG1A10AP01	LINE MOUNTED RETURN LINE FILTER, 10 MICRON	48	192	¾”
MPS050RG1P25AP01	LINE MOUNTED RETURN LINE FILTER, 25 MICRON	58	192	¾”
MPS070RG1A03AP01	LINE MOUNTED RETURN LINE FILTER, 3 MICRON	45	256	¾”
MPS070RG1A06AP01	LINE MOUNTED RETURN LINE FILTER, 6 MICRON	49	256	¾”
MPS070RG1A10AP01	LINE MOUNTED RETURN LINE FILTER, 10 MICRON	53	256	¾”
MPS070RG1P25AP01	LINE MOUNTED RETURN LINE FILTER, 25 MICRON	63	256	¾”

Note: All filters are supplied with a radial visual indicator

Hydrastore
Hydraulic Systems & Components

Online shop now open

Every stock item in this catalogue is now available online for next day delivery www.hydrastore.co.uk/shop

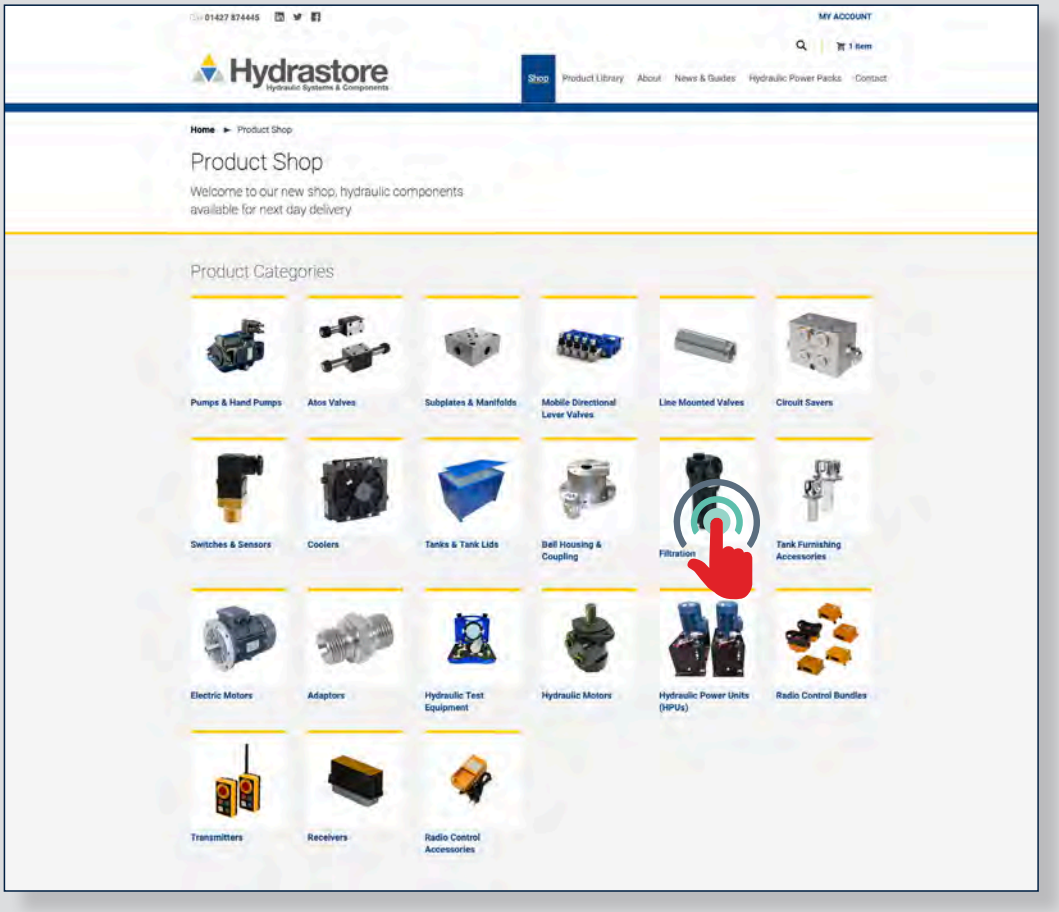

The main index menu is designed and categorised for quick and easy product selection...

Select 'Filtration'

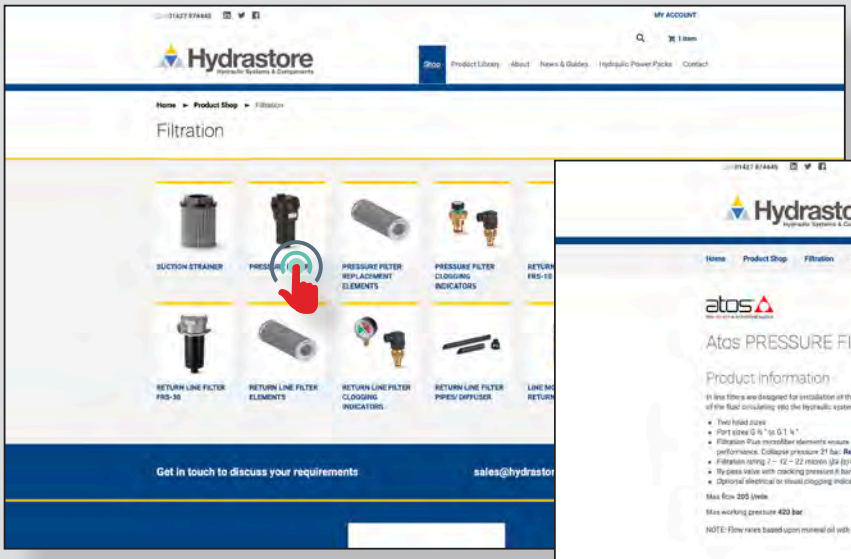

Select the item you need...

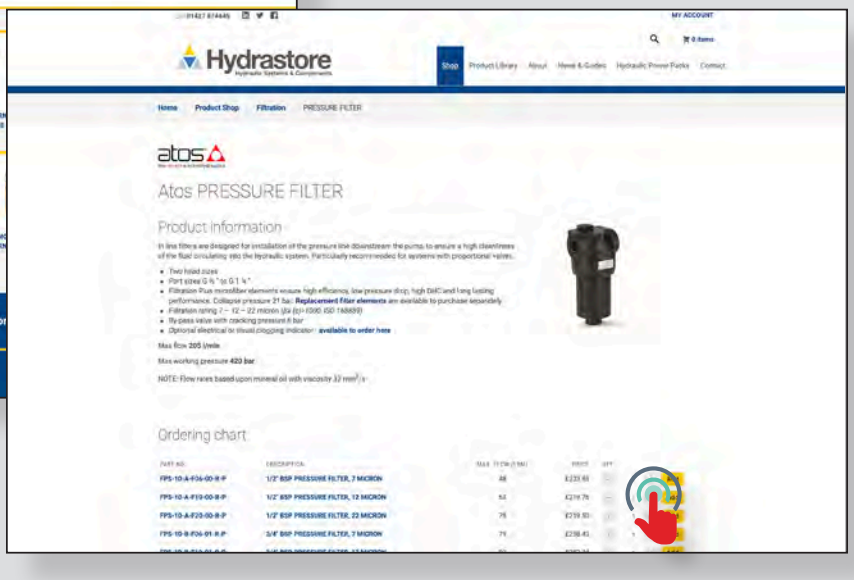

Select quantity from the options, add to basket, checkout, delivered!

Hoses Balflex

HOSE SELECTOR 142
HOSE & FERRULE COMPATIBILITY CHART 143
HOSES & HOSE FITTINGS
TEXMASTER 1/ TEXMASTER 3T 144
TORNARE 4 HOSES 145
ZETAFLEX HOSE 145
FORZA UNO/ FORZE DUE HOSES 146
BALPAC 3000 SHARKSIN/ BALPAC PREMIUM SHARSKIN HOSES 147
BALMASTER BESTFLEX 4SP/ POWERSPIR BESTFLEX 4SH HOSES 148
BALMASTER BESTLFLEX R12/ POWERSPIR BESTFLEX R13/ POWERSPIR BESTFLEX R15 HOSES 149
BALFLON SAE 100R14/ BALFLON CONVOLUTED HOSES 150
HOSE FITTINGS
23 SERIES INSERTS - BSPP 151
23 SERIES INSERTS - SAE FLANGE 152
23 SERIES INSERTS - METRIC 153
23 SERIES INSERTS - BANJO 154
BW23 SERIES ONE PIECE INS 155
SERIES 26 INTERLOCK INSERTS - BSPP 155
SERIES 26 INTERLOCK INSERTS - JIC 156
SERIES 26 INTERLOCK INSERTS - ORFS SWIVEL 156
SERIES 26 INTERLOCK INSERTS - SAE FLANGE 157
SERIES 26 INTERLOCK INSERTS - METRIC 158

Hoses Gates

STOCK HOSE ORDERING SELECTOR & GUIDE 160
PRO1T & PROV HOSES 161
HOSES & HOSE FITTINGS
EX SERIES INSERTS - BSP 162
EX SERIES INSERTS - METRIC 163
M3K/ M4K/ MXG5K-XTP HOSES 164
EFG3K/ EFG5K/ EFG6K HOSES 165
GMV HOSES 166
HOSE FITTINGS
G SERIES (MEGACRIMP) ONE PIECE INSERT - BSP 167
G SERIES (MEGACRIMP) ONE PIECE INSERT - METRIC 168
GS SERIES (GLOBAL SPIRAL) INSERTS - BSP 169
GS SERIES (GLOBAL SPIRAL) INSERTS - METRIC 170
GSP (GLOBALSPIRALPLUS) INSERTS - BSP 170

Hose protection 171

Adapters 172

Hose Selector

Hydrastore's stockholding of Balflex hoses and associated components is summarised in the table below.
With an extensive range of hose types and sizes the table shows at a glance the pressure capability for each hose size along with the required hose endings.

Further detailed specifications are then given for each hose over the next few pages followed by a comprehensive selection of inserts to meet the application requirements. More inserts, such as JIC versions, are also available upon request.

		Hose diameter																	
		1/8"	3/16"	1/4"	5/16"	3/8"	1/2"	5/8"	3/4"	1"	1 1/4"	1 1/2"	2"	2 1/2"	3"	3 1/2"	4"	Ferrule Series	Insert Series
Hose	Hose Type	2	3	4	5	6	8	10	12	16	20	24	32	40	48	56	64		
TEXMASTER 1	SUCTION/ DELIVERY		34	28	28	28	28	24	21	17								20	23
TEXMASTER 3T	SUCTION/ DELIVERY			145	130	110	93	80	70	55	45	40	33					20	23
TORNARE 4	SUCTION/ DELIVERY								21	17	14	10.5	7	4	4	3	2.5	20	23
ZETAFLEX	THERMO PLASTIC		210	192	190	160	155	105	90	70								20	23
FORZA UNO	1SC (1 wire compact)										63	50	40	45	35			20	23
FORZA DUE	2SC (2 wire compact)										125	90	80	70	55			20	23
BALPAC 3000 - SHARK SKIN	1SC (1 wire compact)			260	260	250	210	210	210	210								20	23 or BW23
BALPAC PREMIUM - SHARK SKIN	2SC (2 wire compact)			450	420	400	360	280	280	210								20	23 or BW23
BALMASTER BESTFLEX 4SP	MULTI-SPIRAL					445	420	420	380	320	210	210	175					20	23
POWERSPIR BESTFLEX 4SH	MULTI-SPIRAL								420	420	350	300	250					20	23
BALMASTER BESTFLEX R12	MULTI-SPIRAL					280	280	280	280	280	210	175	175					20	23
POWERSPIR BESTFLEX R13	MULTI-SPIRAL										350	350	350					20	26
POWERSPIR BESTFLEX R15	MULTI-SPIRAL										420	420	420					20	26
BALFLON SAE 100R14	OVERBRAID PTFE	275	200	175	150	135	120	100	90	65								20	23
BALFLON CONVOLUTED	OVERBRAID PTFE			160	135	120	110	80	70	50								20	23

0-49 bar
50-99 bar
100 -199 bar
200-299 bar
300-399 bar
400+ bar

Hose & Ferrule Compatibility Chart

The chart below shows an overview of the Series 20 ferrules range by hose along with a drawing for each ferrule type. In the ordering tables for each hose the exact ferrule part number required is provided for each hose size.

	Hose Diameter													
Hose	1/8”	3/16”	1/4”	5/16”	3/8”	1/2”	5/8”	3/4”	1”	1 1/4”	1 1/2”	2”	2 1/2”	3”
	2	3	4	5	6	8	10	12	16	20	24	32	40	48
TEXMASTER 1		20.107												
TEXMASTER 3T			20.201			20.202			20.301	20.201				
TORNARE 4								20.302	20.204				use heavy duty clip	
FORZA UNO										20.204				
FORZA DUE										20.204				
BALPAC 3000 - SHARK SKIN			20.305				20.302		20.204					
BALPAC PREMIUM - SHARK SKIN			20.302						20.204					
BALMASTER BESTFLEX 4SP					20.NS4									
POWERSPIR BESTFLEX 4SH								20.NS4						
BALMASTER BESTFLEX R12					20.NS4									
POWERSPIR BESTFLEX R13										20.406				
POWERSPIR BESTFLEX R15										20.406				
BALFLON SAE R14	20.107													
BALFLON CONVOLUTED			20.107			20.TFC								

NON SKIVE Balfit ®
1 & 2 Wire Braid Ferrule
20.204 / 20.302

NON SKIVE Balfit ®
1 Wire Braid Ferrule
20.101 / 20.301

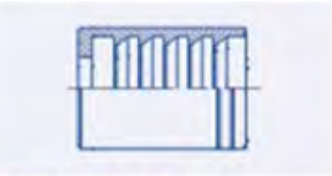

NON SKIVE Balfit ®
2 Wire Braid Ferrule
20.201 / 20.302

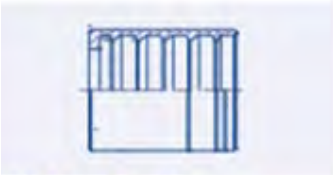

NON SKIVE Balfit ®
1 & 2 Wire Braid Ferrule
20.202

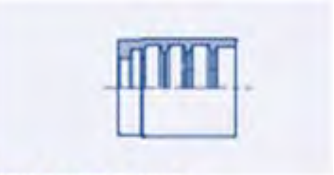

NON SKIVE Balfit ®
1 Wire Braid Ferrule
20.305

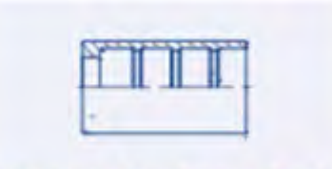

NON SKIVE Balfit ® Textile Braid
Thermoplastic & PTFE Ferrule
20.107

NON SKIVE Balfit ®
PTFE Convoluted Ferrule
20.TFC

NON SKIVE Balfit ®
4 Spiral Ferrule
20.NS4

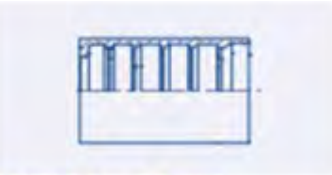

NON SKIVE Balfit ®
4 & 6 Spiral Ferrule
20.406

TEXMASTER 1/ TEXMASTER 3T HOSES

	TEXMASTER 1	TEXMASTER 3T
Pressure capability	17 to 34 bar	33 to 145 bar
Recommended for	Medium pressure, petroleum base hydraulic fluids	
Tube	Seamless oil resistant synthetic rubber	
Reinforcement	1 high resistance synthetic fibre braid	2 high resistance synthetic fibre braids
Cover	Black wrapped oil, weather and abrasion resistant synthetic rubber. MSHA approved	
Temperature range	-40 deg C to +100 deg C	
Standards	ISO 4079, SAE J517, EN 854	
Associated hose ends	Balflex 2-piece fittings series 23 with series 20 ferrules	

TEXMASTER 1 Ordering Chart

Part No.	Description	Max. Pressure (bar)	Min. Bend Radius (mm)	Weight (kg/m)
10.1216.03	TEXMASTER 1 3/16" R6 3.4-MPA	34	51	0.13
10.1216.04	TEXMASTER 1 1/4" R6 2.8-MPA	28	64	0.14
10.1216.05	TEXMASTER 1 5/16" R6 2.8-MPA	28	76	0.18
10.1216.06	TEXMASTER 1 3/8" R6 2.8-MPA	28	76	0.19
10.1216.08	TEXMASTER 1 1/2" R6 2.8-MPA	28	102	0.27
10.1216.10	TEXMASTER 1 5/8" R6 2.4-MPA	24	127	0.31
10.1216.12	TEXMASTER 1 3/4" R6 2.1-MPA	21	152	0.43
10.1216.16	TEXMASTER 1 1" R6 1.7-MPA	17	203	0.59

Ferrule Ordering Chart

Ferrule Part No.	Description	Insert Type
20.107.03	3/16" FERRULE TEXTILE BRAID	23
20.107.04	1/4" FERRULE TEXTILE BRAID	
20.107.05	5/16" FERRULE TEXTILE BRAID	
20.107.06	3/8" FERRULE TEXTILE BRAID	
20.107.08	1/2" FERRULE TEXTILE BRAID	
20.107.10	5/8" FERRULE TEXTILE BRAID	
20.107.12	3/4" FERRULE TEXTILE BRAID	
20.107.16	1" FERRULE TEXTILE BRAID	

TEXMASTER 3/3T Ordering Chart

Part No.	Description	Max. Pressure (bar)	Min. Bend Radius (mm)	Weight (kg/m)
10.1220.04	TEXMASTER 3TE 1/4" R3-3TE 14.5-MPA	145	45	0.18
10.1220.05	TEXMASTER 3TE 5/16" R3-3TE 13-MPA	130	55	0.25
10.1220.06	TEXMASTER 3TE 3/8" R3-3TE 11-MPA	110	70	0.28
10.123T.08	TEXMASTER 3TE 1/2" 3TE 9.3-MPA	93	85	0.44
10.123T.10	TEXMASTER 3TE 5/8" 3TE 8-MPA	80	105	0.49
10.123T.12	TEXMASTER 3TE 3/4" 3TE 7-MPA	70	130	0.7
10.123T.16	TEXMASTER 3TE 1" 3TE 5.5-MPA	55	150	0.79
10.123T.20	TEXMASTER 3TE 1-1/4" 3TE 4.5-MPA	45	190	0.88
10.123T.24	TEXMASTER 3TE 1-1/2" 3TE 4-MPA	40	240	1.17
10.123T.32	TEXMASTER 3TE 2" 3TE 3.3-MPA	33	300	1.63

Ferrule Ordering Chart

Ferrule Part No.	Description	Insert Type
20.201.04	1/4" FERRULE 2 WIRE BRAID	23
20.201.05	5/16" FERRULE 2 WIRE BRAID	
20.201.06	3/8" FERRULE 2 WIRE BRAID	
20.202.08	1/2" FERRULE 1/2 WIRE BRAID	
20.202.10	5/8" FERRULE 1/2 WIRE BRAID	
20.202.12	3/4" FERRULE 1/2 WIRE BRAID	
20.302.16	1" FERRULE 2 WIRE BRAID	
20.201.20	1-1/4" FERRULE 2 WIRE BRAID	
20.201.24	1-1/2" FERRULE 2 WIRE BRAID	
20.201.32	2" FERRULE 2 WIRE BRAID	

TORNARE 4 HOSE

BALFLEX TORNARE 4 SAE 100R4 - DN19 - 3/4" - WP 2.1 MPa 310 PSI - Flame Resistant - MSHA IC-252/00

	TORNARE 4
Pressure capability	2.5 to 21 bar
Recommended for	Suction, delivery, return & discharge of petroleum base hydraulic fluids
Tube	Seamless oil resistant synthetic rubber
Reinforcement	Textile braids and 3 high strength wire helix
Cover	Black wrapped oil, weather and abrasion resistant synthetic rubber. MSHA approved
Temperature range	-40 deg C to +100 deg C
Standards	ISO 4079, SAE J517, EN 854
Associated hose ends	Balflex 2-piece fittings series 23 with series 20 ferrules

TORNARE 4 Ordering Chart

Part No.	Description	Max. Pressure (bar)	Min. Bend Radius (mm)	Weight (kg/m)
10.1219.12	TONARE 4 3/4" R4 2.1-MPA	21	57	0.75
10.1219.16	TONARE 4 1" R4 1.7-MPA	17	75	0.93
10.1219.20	TONARE 4 1-1/4" R4 1.4-MPA	14	96	1.25
10.1219.24	TONARE 4 1-1/2" R4 1.05-MPA	10.5	114	1.54
10.1219.32	TONARE 4 2" R4 0.7-MPA	7	152	2.00

Ferrule Ordering Chart

Ferrule Part No.	Description	Insert Type
20.302.12	3/4 "FERRULE 1/2 WIRE BRAID	23
20.204.16	1" FERRULE 1/2 WIRE BRAID	
20.204.20	1-1/4" FERRULE 1/2 WIRE BRAID	
20.204.24	1-1/2" FERRULE 1/2 WIRE BRAID	
20.204.32	2" FERRULE 1/2 WIRE BRAID	

ZETAFLEX HOSE

BALFLEX ZETAFLEX - DIN EN855/SAE100 R7/ISO 3949 - DN10 - 3/8" - W.P. 16MPa/2400 PSI - 02.04.21 08821R7

	ZETAFLEX
Pressure capability	70 to 210 bar
Recommended for	High pressure petroleum base hydraulic fluid applications
Tube	Polyester Elastomer
Reinforcement	1 high tensile polyester braid
Cover	Black, oil and weather resistant polyurethane, pin pricked
Temperature range	-40 deg C to +100 deg C.
Standards	ISO 3949, SAE J517, EN 855
Associated hose ends	Balflex 2-piece fittings series 23 with series 20 ferrules

ZETAFLEX Ordering Chart

Part No.	Description	Max. Pressure (bar)	Min. Bend Radius (mm)	Weight (kg/m)
10.1030.03	ZETAFLEX 3/16" R7 21-MPA	210	25	0.07
10.1030.04	ZETAFLEX 1/4" R7 19.2-MPA	192	32	0.09
10.1030.05	ZETAFLEX 5/16" R7 19-MPA	190	45	0.13
10.1030.06	ZETAFLEX 3/8" R7 16-MPA	160	55	0.16
10.1030.08	ZETAFLEX 1/2" R7 15.5-MPA	155	77	0.22
10.1030.10	ZETAFLEX 5/8" R7 10.5-MPA	105	110	0.28
10.1030.12	ZETAFLEX 3/4" R7 9-MPA	90	140	0.33
10.1030.16	ZETAFLEX 1" R7 7-MPA	70	200	0.40

Ferrule Ordering Chart

Ferrule Part No.	Description	Insert Type
20.107.03	3/16" FERRULE TEXTILE BRAID	23
20.107.04	1/4" FERRULE TEXTILE BRAID	
20.107.05	5/16" FERRULE TEXTILE BRAID	
20.107.06	3/8" FERRULE TEXTILE BRAID	
20.107.08	1/2" FERRULE TEXTILE BRAID	
20.107.10	5/8" FERRULE TEXTILE BRAID	
20.107.12	3/4" FERRULE TEXTILE BRAID	
20.107.16	1" FERRULE TEXTILE BRAID	

NOTE: See next section for inserts information and part numbers

FORZA UNO/ FORZA DUE HOSES

	FORZE UNO	FORZE DUE
Pressure capability	35 to 63 bar	55 to 125 bar
Recommended for	petroleum base hydraulic fluid applications	
Tube	Seamless oil resistant synthetic rubber	
Reinforcement	1 high tensile steel wire braid	2 high tensile steel wire braids
Cover	Black wrapped oil, weather and abrasion resistant synthetic rubber. MSHA approved	
Temperature range	-40 deg C to +100 deg C and +120 deg C intermittent.	
Standards	ISO 1436, ISO 11237, SAE J517, EN 853, EN 857 (sizes -40 and -48 not included)	
Associated hose ends	Balflex 2-piece fittings series 23 with series 20 ferrules.	

FORZA UNO Ordering Chart

Part No.	Description	Max. Pressure (bar)	Min. Bend Radius (mm)	Weight (kg/m)		Ferrule Part No.	Description	Insert Type
10.1002.20	FORZA UNO 1-1/4" 1SN 6.3-MPA	63	419	1.30	+	20.204.20	1-1/4" FERRULE 1/2 WIRE BRAID	23
10.1002.24	FORZA UNO 1-1/2" 1SN 5-MPA	50	500	1.63	+	20.204.24	1-1/2" FERRULE 1/2 WIRE BRAID	
10.1002.32	FORZA UNO 2" 1SN 4-MPA	40	630	2.00	+	20.204.32	2" FERRULE 1/2 WIRE BRAID	
10.1002.40	FORZA UNO 2-1/2" 1SN 4.5-MPA	45	760	2.35	+	20.204.40	2-1/2" FERRULE 1/2 WIRE BRAID	
10.1002.48	FORZA UNO 3" 1SN 3.5-MPA	35	900	2.55	+	20.204.48	3" FERRULE 1/2 WIRE BRAID	

FORZA DUE Ordering Chart

Part No.	Description	Max. Pressure (bar)	Min. Bend Radius (mm)	Weight (kg/m)		Ferrule Part No.	Description	Insert Type
10.1004.20	FORZA DUE 1-1/4 2SN 12.5-MPA	125	419	2.14	+	20.204.20	1-1/4" FERRULE 1/2 WIRE BRAID	23
10.1004.24	FORZA DUE 1-1/2 2SN 9-MPA	90	500	2.55	+	20.204.24	1-1/2" FERRULE 1/2 WIRE BRAID	
10.1004.32	FORZA DUE 2 2SN 8-MPA	80	630	3.30	+	20.204.32	2" FERRULE 1/2 WIRE BRAID	
10.1004.40	FORZA DUE 2-1/2 2SN 7-MPA	70	760	3.96	+	20.204.40	2-1/2" FERRULE 1/2 WIRE BRAID	
10.1004.48	FORZA DUE 3 2SN 5.5-MPA	55	900	4.96	+	20.204.48	3" FERRULE 1/2 WIRE BRAID	

BALPAC 3000 SHARKSKIN/ BALPAC PREMIUM HOSES

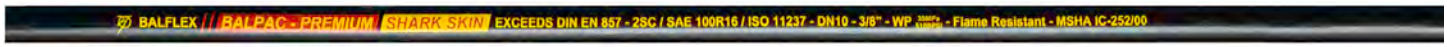

	BALPAC 3000 – SHARK SKIN	BALPAC PREMIUM – SHARK SKIN
Pressure capability	210 to 260 bar	210 to 450 bar
Recommended for	High pressure, petroleum base hydraulic fluid applications	
Tube	Seamless oil resistant synthetic rubber	
Reinforcement	1 high tensile steel wire braid on sizes ¼", 5/16" 3/8" and 1/2" and 2 braids on sizes 5/8", ¾" and 1"	2 high tensile steel wire braids
Cover	Black wrapped oil, weather and abrasion resistant synthetic rubber. MSHA approved	
Temperature range	-40 deg C to +100 deg C and +120 deg C intermittent.	
Standards	ISO 1436, ISO 11237, SAE J517, EN 853, EN 857	
Associated hose ends	Balflex 2-piece fittings series 23 with series 20 ferrules. OR Balflex multicrimp one piece fitting series BW23	

BALPAC 3000 SHARK SKIN Ordering Chart

Part No.	Description	Max. Pressure (bar)	Min. Bend Radius (mm)	Weight (kg/m)		Ferrule Part No.	Description	Insert Type
10.1S17.04	BALPAC 1SC-SM 1/4" R17 SM 26-MPA	260	51	0.22	+	20.305.04	1/4" FERRULE 1 WIRE BRAID	23 OR BW23 (no ferrule with BW23)
10.1S17.05	BALPAC 1SC-SM 5/16" R17 SM 26-MPA	260	60	0.27	+	20.305.05	5/16" FERRULE 1 WIRE BRAID	
10.1S17.06	BALPAC 1SC-SM 3/8" R17 SM 25-MPA	250	64	0.34	+	20.305.06	3/8 "FERRULE 1 WIRE BRAID	
10.1S17.08	BALPAC 1SC-SM 1/2" R17 SM 21-MPA	210	89	0.42	+	20.305.08	1/2 "FERRULE 1 WIRE BRAID	
10.1S17.10	BALPAC 1SC-SM 5/8" R17 SM 21-MPA	210	102	0.51	+	20.302.10	5/8" FERRULE 1/2 WIRE BRAID	
10.1S17.12	BALPAC 1SC-SM 3/4" R17 SM 21-MPA	210	122	0.63	+	20.302.12	3/4" FERRULE 1/2 WIRE BRAID	
10.1S17.16	BALPAC 1SC-SM 1" R17 SM 21-MPA	210	152	1.00	+	20.204.16	1" FERRULE 1/2 WIRE BRAID	

BALPAC PREMIUM SHARK SKIN Ordering Chart

Part No.	Description	Max. Pressure (bar)	Min. Bend Radius (mm)	Weight (kg/m)		Ferrule Part No.	Description	Insert Type
10.1S19.04	BALPAC 2SC-SM 1/4" R16 SM 45-MPA	450	50	0.27	+	20.302.04	1/4" FERRULE 1/2 WIRE BRAID	23 OR BW23(no ferrule with BW23)
10.1S19.05	BALPAC 2SC-SM 5/16" R16 SM 42-MPA	420	57	0.30	+	20.302.05	5/16" FERRULE 1/2 WIRE BRAID	
10.1S19.06	BALPAC 2SC-SM 3/8" R16 SM 40-MPA	400	65	0.42	+	20.302.06	3/8" FERRULE 1/2 WIRE BRAID	
10.1S19.08	BALPAC 2SC-SM 1/2" R16 SM 36-MPA	360	90	0.52	+	20.302.08	1/2" FERRULE 1/2 WIRE BRAID	
10.1S19.10	BALPAC 2SC-SM 5/8" R16 SM 28-MPA	280	100	0.63	+	20.302.10	5/8" FERRULE 1/2 WIRE BRAID	
10.1S19.12	BALPAC 2SC-SM 3/4" R16 SM 28-MPA	280	120	0.80	+	20.302.12	3/4" FERRULE 1/2 WIRE BRAID	
10.1S19.16	BALPAC 2SC-SM 1" R16 SM 21-MPA	210	150	1.22	+	20.204.16	1" FERRULE 1/2 WIRE BRAID	

NOTE: See next section for inserts information and part numbers

BALMASTER BESTFLEX 4SP/ POWERSPIR BESTFLEX 4SH HOSES

	BALMASTER BESTFLEX 4SP	POWERSPIR BESTFLEX 4SH
Pressure capability	175 to 445 bar	250 to 420 bar
Recommended for	Very high pressure, extra flexible, petroleum base hydraulic fluid applications	
Tube	Seamless oil resistant synthetic rubber	
Reinforcement	4 spirals of high tensile steel wire	
Cover	Black wrapped oil, weather and abrasion resistant synthetic rubber. MSHA approved	
Temperature range	-40 deg C to +100 deg C and +120 deg C intermittent.	
Standards	ISO 3862, SAE J517, EN 856	
Associated hose ends	Balflex 2-piece fittings series 23 with series 20 ferrules.	

BALMASTER BESTFLEX 4SP Ordering Chart

Part No.	Description	Max. Pressure (bar)	Min. Bend Radius (mm)	Weight (kg/m)
10.1008.06F	BESTFLEX 3/8" 4SP 44.5-MPA	445	180	0.80
10.1008.08F	BESTFLEX 1/2" 4SP 41.5-MPA	420	230	1.15
10.1008.10F	BESTFLEX 5/8" 4SP 35-MPA	420	250	1.26
10.1008.12F	BESTFLEX 3/4" 4SP 38-MPA	380	300	1.44
10.1008.16F	BESTFLEX 1" 4SP 32-MPA	320	340	2.15
10.1008.20F	BESTFLEX 1-1/4" 4SP 21-MPA	210	460	2.75
10.1008.24F	BESTFLEX 1-1/2" 4SP 18.5-MPA	210	560	3.35
10.1008.32F	BESTFLEX 2" 4SP 17.5-MPA	175	660	4.60

Ferrule Ordering Chart

	Ferrule Part No.	Description	Insert Type
+	20.NS4.06	3/8" FERRULE 4 SPIRAL	23
+	20.NS4.08	1/2" FERRULE 4 SPIRAL	
+	20.NS4.10	5/8" FERRULE 4 SPIRAL	
+	20.NS4.12	3/4" FERRULE 4 SPIRAL	
+	20.NS4.16	1" FERRULE 4 SPIRAL	
+	20.NS4.20	1-1/4" FERRULE 4 SPIRAL	
+	20.NS4.24	1-1/2" FERRULE 4 SPIRAL	
+	20.NS4.32	2" FERRULE 4 SPIRAL	

POWERSPIR BESTFLEX 4SH Ordering Chart

Part No.	Description	Max. Pressure (bar)	Min. Bend Radius (mm)	Weight (kg/m)
10.1009.12F	BESTFLEX 3/4" 4SH 42-MPA	420	265	1.56
10.1009.16F	BESTFLEX 1" 4SH 42-MPA	420	330	2.09
10.1009.20F	BESTFLEX 1-1/4" 4SH 35-MPA	350	460	2.57
10.1009.24F	BESTFLEX 1-1/2" 4SH 30-MPA	300	560	3.44
10.1009.32F	BESTFLEX 2" 4SH 25-MPA	250	700	4.9

Ferrule Ordering Chart

	Ferrule Part No.	Description	Insert Type
+	20.NS4.12	3/4" FERRULE 4 SPIRAL	23
+	20.NS4.16	1" FERRULE 4 SPIRAL	
+	20.NS4.20	1-1/4" FERRULE 4 SPIRAL	
+	20.NS4.24	1-1/2" FERRULE 4 SPIRAL	
+	20.NS4.32	2" FERRULE 4 SPIRAL	

BALMASTER BESTLFLEX R12/ POWERSPIR BESTFLEX R13/ POWERSPIR BESTFLEX R15 HOSES

	BALMASTER BESTLFLEX R12	POWERSPIR BESTFLEX R13	POWERSPIR BESTFLEX R15
Pressure capability	175 to 280 bar	350 bar	420 bar
Recommended for	Very high pressure, extra flexible, petroleum base hydraulic fluid applications		
Tube	Seamless oil resistant synthetic rubber		
Reinforcement	4 spirals of high tensile steel wire	6 spirals of high tensile steel wire	
Cover	Black wrapped oil, weather and abrasion resistant synthetic rubber. MSHA approved		
Temperature range	-40 deg C to +100 deg C and +120 deg C intermittent.		
Standards	ISO 3862, SAE J517, EN 856		
Associated hose ends	Balflex 2-piece fittings series 23 with series 20 ferrules.	Balflex 2-piece fittings series 26 with series 20 ferrules.	

BALMASTER BESTFLEX R12 Ordering Chart

Part No.	Description	Max. Pressure (bar)	Min. Bend Radius (mm)	Weight (kg/m)
10.1012.06F	BESTFLEX 3/8" R12 28-MPA	280	120	0.80
10.1012.08F	BESTFLEX 1/2" R12 28-MPA	280	170	1.15
10.1012.10F	BESTFLEX 5/8" R12 28-MPA	280	190	1.26
10.1012.12F	BESTFLEX 3/4" R12 28-MPA	280	230	1.44
10.1012.16F	BESTFLEX 1" R12 28-MPA	280	290	2.15
10.1012.20F	BESTFLEX 1-1/4" R12 28-MPA	210	400	2.75
10.1012.24F	BESTFLEX 1-1/2" R12 17.5-MPA	175	480	3.35
10.1012.32F	BESTFLEX 2" R12 17.5-MPA	175	630	4.60

+

Ferrule Ordering Chart

Ferrule Part No.	Description	Insert Type
20.NS4.06	3/8" FERRULE 4 SPIRAL	23
20.NS4.08	1/2" FERRULE 4 SPIRAL	
20.NS4.10	5/8" FERRULE 4 SPIRAL	
20.NS4.12	3/4" FERRULE 4 SPIRAL	
20.NS4.16	1" FERRULE 4 SPIRAL	
20.NS4.20	1-1/4" FERRULE 4 SPIRAL	
20.NS4.24	1-1/2" FERRULE 4 SPIRAL	
20.NS4.32	2" FERRULE 4 SPIRAL	

POWERSPIR BESTFLEX R13 Ordering Chart

Part No.	Description	Max. Pressure (bar)	Min. Bend Radius (mm)	Weight (kg/m)
10.1014.20F	BESTFLEX 1-1/4" R13 35-MPA	350	420	3.90
10.1014.24F	BESTFLEX 1-1/2" R13 35-MPA	350	500	4.96
10.1014.32F	BESTFLEX 2" R13 35-MPA	350	620	7.09

+

Ferrule Ordering Chart

Ferrule Part No.	Description	Insert Type
20.406.20	1-1/4" FERRULE 6 SPIRAL DBL SKIVE	26
20.406.24	1-1/2" FERRULE 6 SPIRAL DBL SKIVE	
20.406.32	2" FERRULE 6 SPIRAL DBL SKIVE	

POWERSPIR BESTFLEX R15 Ordering Chart

Part No.	Description	Max. Pressure (bar)	Min. Bend Radius (mm)	Weight (kg/m)
10.1016.20F	BESTFLEX 1-1/4" R15 42-MPA	420	445	3.65
10.1016.24F	BESTFLEX 1-1/2" R15 42-MPA	420	530	4.75
10.1016.32F	BESTFLEX 2" R15 42-MPA	420	650	6.62

+

Ferrule Ordering Chart

Ferrule Part No.	Description	Insert Type
20.406.20	1-1/4" FERRULE 6 SPIRAL DBL SKIVE	26
20.406.24	1-1/2" FERRULE 6 SPIRAL DBL SKIVE	
20.406.32	2" FERRULE 6 SPIRAL DBL SKIVE	

NOTE: See next section for inserts information and part numbers

BALFLON SAE 100R14/ BALFLON CONVOLUTED HOSES

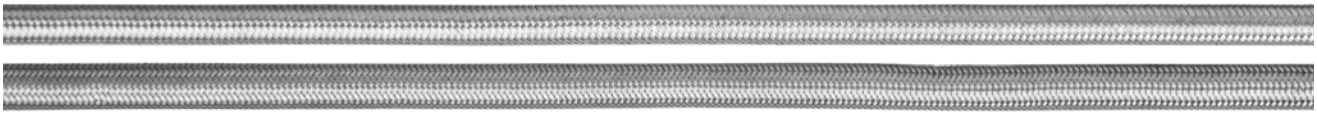

	BALFLON SAE 100R14	BALFLON CONVOLUTED
Pressure capability	65 to 275 bar	50 to 160 bar
Recommended for	High pressure applications for water base, petroleum base or synthetic base hydraulic fluids, corrosive food liquids and high temperature gases and liquids	
Tube	Seamless smooth polytetrafluorethylene (PTFE)	Seamless corrugated polytetrafluorethylene (PTFE)
Reinforcement/ Cover	Single steel wire reinforced braid	
Temperature range	-70 deg C to +260 deg C	
Standards	SAE J517 R14	
Associated hose ends	Balflex 2-piece fittings series 23 with series 20 ferrules	

BALFLON SAE R14 SMOOTH Ordering Chart

Part No.	Description	Max. Pressure (bar)	Min. Bend Radius (mm)	Weight (kg/m)
10.2003.02	BALFLON 0.125” R14 27.5-MPA	275	40	0.06
10.2003.03	BALFLON 3/16” R14 20-MPA	200	50	0.08
10.2003.04	BALFLON 1/4” R14 17.5-MPA	175	75	0.09
10.2003.05	BALFLON 5/16” R14 15-MPA	150	100	0.14
10.2003.06	BALFLON 3/8” R14 13.5-MPA	135	125	0.16
10.2003.08	BALFLON 1/2” R14 12-MPA	120	165	0.21
10.2003.10	BALFLON 5/8” R14 10-MPA	100	200	0.27
10.2003.12	BALFLON 3/4” R14 9-MPA	90	280	0.37
10.2003.16	BALFLON 1” R14 6.5-MPA	65	400	0.49

Ferrule Ordering Chart

Ferrule Part No.	Description	Insert Type
20.107.02	1/8” FERRULE TEXTILE BRAID	23
20.107.03	3/16” FERRULE TEXTILE BRAID	
20.107.04	1/4” FERRULE TEXTILE BRAID	
20.107.05	5/16” FERRULE TEXTILE BRAID	
20.107.06	3/8” FERRULE TEXTILE BRAID	
20.107.08	1/2” FERRULE TEXTILE BRAID	
20.107.10	5/8” FERRULE TEXTILE BRAID	
20.107.12	3/4” FERRULE TEXTILE BRAID	
20.107.16	1” FERRULE TEXTILE BRAID	

BALFLON CORRUGATED Ordering Chart

Part No.	Description	Max. Pressure (bar)	Min. Bend Radius (mm)	Weight (kg/m)
10.2010.04	BALFLON CONV 1/4” R14 CV 16-MPA	160	20	0.10
10.2010.05	BALFLON CONV 5/16” R14 CV 13.5-MPA	135	30	0.17
10.2010.06	BALFLON CONV 3/8” R14 CV 12-MPA	120	30	0.20
10.2010.08	BALFLON CONV 1/2” R14 CV 11-MPA	110	40	0.27
10.2010.10	BALFLON CONV 5/8” R14 CV 8-MPA	80	50	0.33
10.2010.12	BALFLON CONV 3/4” R14 CV 7-MPA	70	80	0.47
10.2010.16	BALFLON CONV 1” R14 CV 5-MPA	50	100	0.63

Ferrule Ordering Chart

Ferrule Part No.	Description	Insert Type
20.107.04	1/4” FERRULE TEXTILE BRAID	23
20.107.05	5/16” FERRULE TEXTILE BRAID	
20.107.06	3/8” FERRULE TEXTILE BRAID	
20.TFC.08	1/2” FERRULE THERMO PLASTIC	
20.TFC.10	5/8” FERRULE THERMO PLASTIC	
20.TFC.12	3/4” FERRULE THERMO PLASTIC	
20.TFC.16	1” FERRULE THERMO PLASTIC	

NOTE: See next section for inserts information and part numbers

23 SERIES INSERTS - BSPP

MALE BSPP INSERT

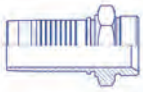

Part No.	Description
23.0100.0404	MALE 60° CONE STR 1/4".H 1/4 BSP
23.0100.0406	MALE 60° CONE STR 1/4".H 3/8 BSP
23.0100.0604	MALE 60° CONE STR 3/8".H 1/4 BSP
23.0100.0606	MALE 60° CONE STR 3/8".H 3/8 BSP
23.0100.0608	MALE 60° CONE STR 3/8".H 1/2 BSP
23.0100.0806	MALE 60° CONE STR 1/2".H 3/8 BSP
23.0100.0808	MALE 60° CONE STR 1/2".H 1/2 BSP
23.0100.0810	MALE 60° CONE STR 1/2".H 5/8 BSP
23.0100.1010	MALE 60° CONE STR 5/8".H 5/8 BSP
23.0100.1012	MALE 60° CONE STR 5/8".H 3/4 BSP
23.0100.1212	MALE 60° CONE STR 3/4".H 3/4 BSP
23.0100.1216	MALE 60° CONE STR 3/4".H 1 BSP
23.0100.1616	MALE 60° CONE STR 1".H 1 BSP

FEMALE BSPP INSERT

Part No.	Description
23.3012.0404	FEM 60° CONE STR 1/4".H 1/4 BSP
23.3012.0406	FEM 60° CONE STR 1/4".H 1/4 BSP
23.3012.0604	FEM 60° CONE STR 3/8".H 1/4 BSP
23.3012.0606	FEM 60° CONE STR 3/8".H 3/8 BSP
23.3012.0608	FEM 60° CONE STR 3/8".H 1/2 BSP
23.3012.0806	FEM 60° CONE STR 1/2".H 3/8 BSP
23.3012.0808	FEM 60° CONE STR 1/2".H 1/2 BSP
23.3012.1010	FEM 60° CONE STR 5/8".H 5/8 BSP
23.3012.1012	FEM 60° CONE STR 5/8".H 3/4 BSP
23.3012.1212	FEM 60° CONE STR 3/4".H 3/4 BSP
23.3012.1216	FEM 60° CONE STR 3/4".H 1 BSP
23.3012.1616	FEM 60° CONE STR 1".H 1 BSP
23.3012.1620	FEM 60° CONE STR 1".H 1-1/4 BSP
23.3012.2020	FEM 60° CONE STR 1-1/4".H 1-1/4 BSP
23.3012.2024	FEM 60° CONE STR 1-1/4".H 1-1/2 BSP
23.3012.2424	FEM 60° CONE STR 1-1/2".H 1-1/2 BSP
23.3012.2432	FEM 60° CONE STR 1-1/2".H 2 BSP
23.3012.3232	FEM 60° CONE STR 2".H 2 BSP

45 DEG SWEPT FEMALE BSPP INSERT

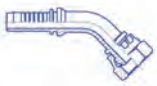

Part No.	Description
23.3042.0404	FEM 60° CONE 45° ELBOW 1/4".H 1/4 BSP
23.3042.0606	FEM 60° CONE 45° ELBOW 3/8".H 3/8 BSP
23.3042.0808	FEM 60° CONE 45° ELBOW 1/2".H 1/2 BSP
23.3042.1010	FEM 60° CONE 45° ELBOW 5/8".H 5/8 BSP
23.3042.1212	FEM 60° CONE 45° ELBOW 3/4".H 3/4 BSP
23.3042.1616	FEM 60° CONE 45° ELBOW 1".H 1 BSP

90 DEG SWEPT FEMALE BSPP INSERT

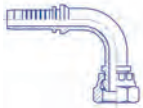

Part No.	Description
23.3092.0404	FEM 60° CONE 90° ELBOW 1/4".H 1/4 BSP
23.3092.0406	FEM 60° CONE 90° ELBOW 1/4".H 3/8 BSP
23.3092.0604	FEM 60° CONE 90° ELBOW 3/8".H 1/4 BSP
23.3092.0606	FEM 60° CONE 90° ELBOW 3/8".H 3/8 BSP
23.3092.0608	FEM 60° CONE 90° ELBOW 3/8".H 1/2 BSP
23.3092.0806	FEM 60° CONE 90° ELBOW 1/2".H 3/8 BSP
23.3092.0808	FEM 60° CONE 90° ELBOW 1/2".H 1/2 BSP
23.3092.0810	FEM 60° CONE 90° ELBOW 1/2".H 5/8 BSP
23.3092.1008	FEM 60° CONE 90° ELBOW 5/8".H 1/2 BSP
23.3092.1010	FEM 60° CONE 90° ELBOW 5/8".H 5/8 BSP
23.3092.1012	FEM 60° CONE 90° ELBOW 5/8".H 3/4 BSP
23.3092.1212	FEM 60° CONE 90° ELBOW 3/4".H 3/4 BSP
23.3092.1216	FEM 60° CONE 90° ELBOW 3/4".H 1 BSP
23.3092.1616	FEM 60° CONE 90° ELBOW 1".H 1 BSP
23.3092.2020	FEM 60° CONE 90° ELBOW 1-1/4".H 1-1/4 BSP
23.3092.2024	FEM 60° CONE 90° ELBOW 1-1/4".H 1-1/2 BSP
23.3092.2424	FEM 60° CONE 90° ELBOW 1-1/2".H 1-1/2 BSP
23.3092.2432	FEM 60° CONE 90° ELBOW 1-1/2".H 2 BSP
23.3092.3232	FEM 60° CONE 90° ELBOW 2".H 2 BSP

90 DEG SWEPT COMPACT FEMALE BSPP INSERT

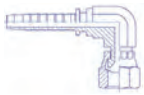

Part No.	Description
23.3082.0404	MALE 60° CONE C90° 1/4".H 1/4 BSP
23.3082.0606	MALE 60° CONE C90° 3/8".H 3/8 BSP
23.3082.0808	MALE 60° CONE C90° 1/2".H 1/2 BSP
23.3082.1212	MALE 60° CONE C90° 3/4".H 3/4 BSP
23.3082.1616	MALE 60° CONE C90° 1".H 1 BSP

FEMALE BSPP WITH O-RING INSERT

Part No.	Description
23.3112.0404	FEM 60° CONE STR 1/4".H 1/4 BSP OR
23.3112.0606	FEM 60° CONE STR 3/8".H 3/8 BSP OR
23.3112.0808	FEM 60° CONE STR 1/2".H 1/2 BSP OR
23.3112.1212	FEM 60° CONE STR 3/4".H 3/4 BSP OR
23.3112.1616	FEM 60° CONE STR 1".H 1 BSP OR
23.3112.1620	FEM 60° CONE STR 1".H 1-1/4 BSP OR
23.3112.2020	FEM 60° CONE STR 1-1/4".H 1-1/4 BSP OR
23.3112.2024	FEM 60° CONE STR 1-1/4".H 1-1/4 BSP OR
23.3112.2424	FEM 60° CONE STR 1-1/2".H 1-1/2 BSP OR
23.3112.2432	FEM 60° CONE STR 1-1/2".H 1-1/2 BSP OR
23.3112.3232	FEM 60° CONE STR 2".H 2 BSP OR

45 DEG SWEPT FEMALE BSPP WITH O-RING INSERT

Part No.	Description
23.3142.0404	FEM 60° CONE 45° ELBOW 1/4".H 1/4 BSP OR
23.3142.0606	FEM 60° CONE 45° ELBOW 3/8".H 3/8 BSP OR
23.3142.0808	FEM 60° CONE 45° ELBOW 1/2".H 1/2 BSP OR
23.3142.1212	FEM 60° CONE 45° ELBOW 3/4".H 3/4 BSP OR
23.3142.1616	FEM 60° CONE 45° ELBOW 1".H 1 BSP OR
23.3142.1620	FEM 60° CONE 45° ELBOW 1".H 1-1/4 BSP OR
23.3142.2020	FEM 60° CONE 45° ELBOW 1-1/4".H 1-1/4 BSP OR
23.3142.2024	FEM 60° CONE 45° ELBOW 1-1/4".H 1-1/2 BSP OR
23.3142.2424	FEM 60° CONE 45° ELBOW 1-1/2".H 1-1/2 BSP OR
23.3142.2432	FEM 60° CONE 45° ELBOW 1-1/2".H 2 BSP OR
23.3142.3232	FEM 60° CONE 45° ELBOW 2".H 2 BSP OR

90 DEG SWEPT FEMALE BSPP WITH O-RING INSERT

Part No.	Description
23.3192.0404	FEM 60° CONE 90° ELBOW 1/4".H 1/4 BSP OR
23.3192.0606	FEM 60° CONE 90° ELBOW 3/8".H 3/8 BSP OR
23.3192.0808	FEM 60° CONE 90° ELBOW 1/2".H 1/2 BSP OR
23.3192.1212	FEM 60° CONE 90° ELBOW 3/4".H 3/4 BSP OR
23.3192.1616	FEM 60° CONE 90° ELBOW 1".H 1 BSP OR
23.3192.1620	FEM 60° CONE 90° ELBOW 1".H 1-1/4 BSP OR
23.3192.2020	FEM 60° CONE 90° ELBOW 1-1/4".H 1-1/4 BSP OR
23.3192.2024	FEM 60° CONE 90° ELBOW 1-1/4".H 1-1/2 BSP OR
23.3192.2424	FEM 60° CONE 90° ELBOW 1-1/2".H 1-1/2 BSP OR
23.3192.2432	FEM 60° CONE 90° ELBOW 1-1/2".H 2 BSP OR
23.3192.3232	FEM 60° CONE 90° ELBOW 2".H 2 BSP OR

23 SERIES INSERTS - SAE FLANGE

STRAIGHT SAE 3000 FLANGE INSERT

Part No.	Description
23.7013.1212	3KFL 3/4".H 3/4 BSP
23.7013.1216	3KFL 3/4".H 1 BSP
23.7013.1616	3KFL 1".H 1 BSP
23.7013.1620	3KFL 1".H 1-1/4 BSP
23.7013.2020	3KFL 1-1/4".H 1-1/4 BSP
23.7013.2024	3KFL 1-1/4".H 1-1/2 BSP
23.7013.2424	3KFL 1-1/2".H 1-1/2 BSP

90 DEG SWEPT SAE 3000 FLANGE INSERT

Part No.	Description
23.7093.1212	3KFL90° 3/4".H 3/4 BSP
23.7093.1216	3KFL90° 3/4".H 1 BSP
23.7093.1616	3KFL90° 1".H 1 BSP
23.7093.1620	3KFL90° 1".H 1-1/4 BSP
23.7093.2020	3KFL90° 1-1/4".H 1-1/4 BSP
23.7093.2024	3KFL90° 1-1/4".H 1-1/2 BSP
23.7093.2424	3KFL90° 1-1/2".H 1-1/2 BSP

STRAIGHT SAE 6000 FLANGE INSERT

Part No.	Description
23.7016.1212	6KFL 3/4".H 3/4 BSP
23.7016.1216	6KFL 3/4".H 1 BSP
23.7016.1616	6KFL 1".H 1 BSP
23.7016.1620	6KFL 1".H 1-1/4 BSP
23.7016.2020	6KFL 1-1/4".H 1-1/4 BSP
23.7016.2024	6KFL 1-1/4".H 1-1/2 BSP
23.7016.2424	6KFL 1-1/2".H 1-1/2 BSP

90 DEG SWEPT SAE 6000 FLANGE INSERT

Part No.	Description
23.7096.1212	6KFL90° 3/4".H 3/4 BSP
23.7096.1216	6KFL90° 3/4".H 1 BSP
23.7096.1616	6KFL90° 1".H 1 BSP
23.7096.1620	6KFL90° 1".H 1-1/4 BSP
23.7096.2020	6KFL90° 1-1/4".H 1-1/4 BSP
23.7096.2024	6KFL90° 1-1/4".H 1-1/2 BSP
23.7096.2424	6KFL90° 1-1/2".H 1-1/2 BSP

23 SERIES INSERTS - METRIC

MALE METRIC LIGHT SERIES INSERT

Part No.	Description
23.1000.0312	MALE 24° O-RING STR 3/16".H 6L 12X1.5
23.1000.0412	MALE 24° O-RING STR 1/4".H 6L 12X1.6
23.1000.0414	MALE 24° O-RING STR 1/4".H 8L 14X1.5
23.1000.0416	MALE 24° O-RING STR 1/4".H 10L 16X1.5
23.1000.0418	MALE 24° O-RING STR 1/4".H 12L 18X1.5
23.1000.0514	MALE 24° O-RING STR 5/16".H 8L 14X1.5
23.1000.0516	MALE 24° O-RING STR 5/16".H 10L 16X1.5
23.1000.0518	MALE 24° O-RING STR 5/16".H 12L 18X1.5
23.1000.0616	MALE 24° O-RING STR 3/8".H 10L 16X1.5
23.1000.0618	MALE 24° O-RING STR 3/8".H 12L 18X1.5
23.1000.0622	MALE 24° O-RING STR 3/8".H 15L 22X1.5
23.1000.0822	MALE 24° O-RING STR 1/2".H 15L 22X1.5
23.1000.0826	MALE 24° O-RING STR 1/2".H 18L 26X1.5
23.1000.1026	MALE 24° O-RING STR 5/8".H 18L 26X1.5
23.1000.1030	MALE 24° O-RING STR 5/8".H 22L 30X2

FEMALE METRIC LIGHT SERIES INSERT

Part No.	Description
23.5013.0312	FEM 24° O-RING STR 3/16".H 6L 12X1.5 OR
23.5013.0412	FEM 24° O-RING STR 1/4".H 6L 12X1.6 OR
23.5013.0414	FEM 24° O-RING STR 1/4".H 8L 14X1.5 OR
23.5013.0416	FEM 24° O-RING STR 1/4".H 10L 16X1.5 OR
23.5013.0418	FEM 24° O-RING STR 1/4".H 12L 18X1.5 OR
23.5013.0514	FEM 24° O-RING STR 5/16".H 8L 14X1.5 OR
23.5013.0516	FEM 24° O-RING STR 5/16".H 10L 16X1.5 OR
23.5013.0518	FEM 24° O-RING STR 5/16".H 12L 18X1.5 OR
23.5013.0616	FEM 24° O-RING STR 3/8".H 10L 16X1.5 OR
23.5013.0618	FEM 24° O-RING STR 3/8".H 12L 18X1.5 OR
23.5013.0622	FEM 24° O-RING STR 3/8".H 15L 22X1.5 OR
23.5013.0822	FEM 24° O-RING STR 1/2".H 15L 22X1.5 OR
23.5013.0826	FEM 24° O-RING STR 1/2".H 18L 26X1.5 OR
23.5013.1026	FEM 24° O-RING STR 5/8".H 18L 26X1.5 OR
23.5013.1030	FEM 24° O-RING STR 5/8".H 22L 30X2 OR

45 DEG SWEPT FEMALE METRIC LIGHT SERIES INSERT

Part No.	Description
23.5043.0312	FEM 24° O-RING 45° ELBOW 3/16".H 6L 12X1.5 OR
23.5043.0412	FEM 24° O-RING 45° ELBOW 1/4".H 6L 12X1.5 OR
23.5043.0414	FEM 24° O-RING 45° ELBOW 1/4".H 8L 14X1.5 OR
23.5043.0416	FEM 24° O-RING 45° ELBOW 1/4".H 10L 16X1.5 OR
23.5043.0418	FEM 24° O-RING 45° ELBOW 1/4".H 12L 18X1.5 OR
23.5043.0516	FEM 24° O-RING 45° ELBOW 5/16".H 10L 16X1.5 OR
23.5043.0518	FEM 24° O-RING 45° ELBOW 5/16".H 18L 26X1.5 OR
23.5043.0616	FEM 24° O-RING 45° ELBOW 5/16".H 10L 16X1.5 OR
23.5043.0618	FEM 24° O-RING 45° ELBOW 3/8".H 12L 18X1.5 OR
23.5043.0622	FEM 24° O-RING 45° ELBOW 3/8".H 15L 22X1.5 OR
23.5043.0822	FEM 24° O-RING 45° ELBOW 1/2".H 15L 22X1.5 OR
23.5043.0826	FEM 24° O-RING 45° ELBOW 1/2".H 18L 26X1.5 OR
23.5043.1026	FEM 24° O-RING 45° ELBOW 5/8".H 18L 26X1.5 OR
23.5043.1030	FEM 24° O-RING 45° ELBOW 5/8".H 22L 30X2 OR

90 DEG SWEPT FEMALE METRIC LIGHT SERIES INSERT

Part No.	Description
23.5093.0312	FEM 24° O-RING 90° ELBOW 3/16".H 6L 12X1.5 OR
23.5093.0412	FEM 24° O-RING 90° ELBOW 1/4".H 6L 12X1.5 OR
23.5093.0414	FEM 24° O-RING 90° ELBOW 1/4".H 8L 14X1.5 OR
23.5093.0416	FEM 24° O-RING 90° ELBOW 1/4".H 10L 16X1.5 OR
23.5093.0418	FEM 24° O-RING 90° ELBOW 1/4".H 12L 18X1.5 OR
23.5093.0516	FEM 24° O-RING 90° ELBOW 5/16".H 10L 16X1.5 OR
23.5093.0518	FEM 24° O-RING 90° ELBOW 5/16".H 18L 26X1.5 OR
23.5093.0616	FEM 24° O-RING 90° ELBOW 5/16".H 10L 16X1.5 OR
23.5093.0618	FEM 24° O-RING 90° ELBOW 3/8".H 12L 18X1.5 OR
23.5093.0622	FEM 24° O-RING 90° ELBOW 3/8".H 15L 22X1.5 OR
23.5093.0822	FEM 24° O-RING 90° ELBOW 1/2".H 15L 22X1.5 OR
23.5093.0826	FEM 24° O-RING 90° ELBOW 1/2".H 18L 26X1.5 OR
23.5093.1026	FEM 24° O-RING 90° ELBOW 5/8".H 18L 26X1.5 OR
23.5093.1030	FEM 24° O-RING 90° ELBOW 5/8".H 22L 30X2 OR

MALE METRIC HEAVY SERIES INSERT

Part No.	Description
23.1100.0414	MALE 24° O-RING STR 1/4".H 6H 14X1.5
23.1100.0416	MALE 24° O-RING STR 1/4".H 8H 16X1.5
23.1100.0418	MALE 24° O-RING STR 1/4".H 10H 18X1.5
23.1100.0518	MALE 24° O-RING STR 5/16".H 10H 18X1.5
23.1100.0520	MALE 24° O-RING STR 5/16".H 12H 20X1.5
23.1100.0618	MALE 24° O-RING STR 3/8".H 10H 18X1.5
23.1100.0620	MALE 24° O-RING STR 3/8".H 12H 20X1.5
23.1100.0622	MALE 24° O-RING STR 3/8".H 14H 22X1.5
23.1100.0820	MALE 24° O-RING STR 1/2".H 12H 20X1.5
23.1100.0824	MALE 24° O-RING STR 1/2".H 16H 24X1.5
23.1100.1230	MALE 24° O-RING STR 3/4".H 20H 30X2
23.1100.1236	MALE 24° O-RING STR 3/4".H 25H 36X2

FEMALE METRIC HEAVY SERIES INSERT

Part No.	Description
23.5113.0414	FEM 24° O-RING STR 1/4".H 6H 14X1.5 OR
23.5113.0416	FEM 24° O-RING STR 1/4".H 8H 16X1.5 OR
23.5113.0418	FEM 24° O-RING STR 1/4".H 10H 18X1.5 OR
23.5113.0518	FEM 24° O-RING STR 5/16".H 10H 18X1.5 OR
23.5113.0520	FEM 24° O-RING STR 5/16".H 12H 20X1.5 OR
23.5113.0618	FEM 24° O-RING STR 3/8".H 10H 18X1.5 OR
23.5113.0620	FEM 24° O-RING STR 3/8".H 12H 20X1.5 OR
23.5113.0622	FEM 24° O-RING STR 3/8".H 14H 22X1.5 OR
23.5113.0820	FEM 24° O-RING STR 1/2".H 12H 20X1.5 OR
23.5113.0822	FEM 24° O-RING STR 1/2".H 15L 22X1.5 OR
23.5113.0824	FEM 24° O-RING STR 1/2".H 16H 24X1.5 OR
23.5113.1230	FEM 24° O-RING STR 3/4".H 20H 30X2 OR
23.5113.1236	FEM 24° O-RING STR 3/4".H 25H 36X2 OR

23 SERIES INSERTS - BANJO

45 DEG SWEPT FEMALE METRIC HEAVY SERIES INSERT

Part No.	Description
23.5143.0414	FEM 24° O-RING 45° ELBOW 1/4".H 6H 14X1.5 OR
23.5143.0416	FEM 24° O-RING 45° ELBOW 1/4".H 8H 16X1.5 OR
23.5143.0418	FEM 24° O-RING 45° ELBOW 1/4".H 10H 18X1.5 OR
23.5143.0518	FEM 24° O-RING 45° ELBOW 5/16".H 10H 18X1.5 OR
23.5143.0520	FEM 24° O-RING 45° ELBOW 5/16".H 12H 20X1.5 OR
23.5143.0618	FEM 24° O-RING 45° ELBOW 3/8".H 10H 18X1.5 OR
23.5143.0620	FEM 24° O-RING 45° ELBOW 3/8".H 12H 20X1.5 OR
23.5143.0622	FEM 24° O-RING 45° ELBOW 3/8".H 14H 22X1.5 OR
23.5143.0820	FEM 24° O-RING 45° ELBOW 1/2".H 12H 20X1.5 OR
23.5143.0824	FEM 24° O-RING 45° ELBOW 1/2".H 16H 24X1.5 OR
23.5143.1230	FEM 24° O-RING 45° ELBOW 3/4".H 20H 30X2 OR
23.5143.1236	FEM 24° O-RING 45° ELBOW 3/4".H 25H 36X2 OR

90 DEG SWEPT FEMALE METRIC HEAVY SERIES INSERT

Part No.	Description
23.5193.0414	FEM 24° O-RING 90° 1/4".H 6H 14X1.5 OR
23.5193.0416	FEM 24° O-RING 90° 1/4".H 8H 16X1.5 OR
23.5193.0418	FEM 24° O-RING 90° 1/4".H 10H 18X1.5 OR
23.5193.0518	FEM 24° O-RING 90° 5/16".H 10H 18X1.5 OR
23.5193.0520	FEM 24° O-RING 90° 5/16".H 12H 20X1.5 OR
23.5193.0618	FEM 24° O-RING 90° 3/8".H 10H 18X1.5 OR
23.5193.0620	FEM 24° O-RING 90° 3/8".H 12H 20X1.5 OR
23.5193.0622	FEM 24° O-RING 90° 3/8".H 14H 22X1.5 OR
23.5193.0820	FEM 24° O-RING 90° 1/2".H 12H 20X1.5 OR
23.5193.0824	FEM 24° O-RING 90° 1/2".H 16H 24X1.5 OR
23.5193.1230	FEM 24° O-RING 90° 3/4".H 20H 30X2 OR
23.5193.1236	FEM 24° O-RING 90° 3/4".H 25H 36X2 OR

METRIC BANJO

Part No.	Description
23.6400.0410	BANJO 1/4".H 10mm
23.6400.0412	BANJO 1/4".H 12mm
23.6400.0414	BANJO 1/4".H 14mm
23.6400.0416	BANJO 1/4".H 16mm
23.6400.0514	BANJO 5/16".H 14mm
23.6400.0516	BANJO 5/16".H 16mm
23.6400.0518	BANJO 5/16".H 18mm
23.6400.0614	BANJO 3/8".H 14mm
23.6400.0616	BANJO 3/8".H 16mm
23.6400.0618	BANJO 3/8".H 18mm
23.6400.0622	BANJO 3/8".H 22mm

BSPP BANJO

Part No.	Description
23.6500.0404	BANJO 1/4".H 1/4 BSP
23.6500.0406	BANJO 1/4".H 3/8 BSP
23.6500.0604	BANJO 3/8".H 1/4 BSP
23.6500.0606	BANJO 3/8".H 3/8 BSP
23.6500.0608	BANJO 3/8".H 1/2 BSP
23.6500.0806	BANJO 1/2".H 3/8 BSP
23.6500.0808	BANJO 1/2".H 1/2 BSP
23.6500.1008	BANJO 5/8".H 1/2 BSP
23.6500.1010	BANJO 5/8".H 5/8 BSP
23.6500.1012	BANJO 5/8".H 3/4 BSP
23.6500.1212	BANJO 3/4".H 3/4 BSP
23.6500.1216	BANJO 3/4".H 1 BSP
23.6500.1616	BANJO 1".H 1 BSP

BW23 SERIES ONE PIECE INSERTS

BSP 60 DEG SWIVEL FEMALE INSERT

Part No.	Description
BW23.3012.0404	FEM 60° CONE 1P STR 1/4".H 1/4 BSP
BW23.3012.0406	FEM 60° CONE 1P STR 1/4".H 3/8 BSP
BW23.3012.0606	FEM 60° CONE 1P STR 3/8".H 3/8 BSP
BW23.3012.0608	FEM 60° CONE 1P STR 3/8".H 1/2 BSP
BW23.3012.0808	FEM 60° CONE 1P STR 1/2".H 1/2 BSP
BW23.3012.1010	FEM 60° CONE 1P STR 5/8".H 5/8 BSP
BW23.3012.1212	FEM 60° CONE 1P STR 3/4".H 3/4 BSP
BW23.3012.1616	FEM 60° CONE 1P STR 1".H 1 BSP

BSP 60 DEG SWIVEL 45 DEG ELBOW FEMALE INSERT

Part No.	Description
BW23.3042.0404	FEM 60° CONE 1P 45° ELBOW 1/4".H 1/4 BSP
BW23.3042.0406	FEM 60° CONE 1P 45° ELBOW 1/4".H 3/8 BSP
BW23.3042.0606	FEM 60° CONE 1P 45° ELBOW 3/8".H 3/8 BSP
BW23.3042.0608	FEM 60° CONE 1P 45° ELBOW 3/8".H 1/2 BSP
BW23.3042.0808	FEM 60° CONE 1P 45° ELBOW 1/2".H 1/2 BSP
BW23.3042.1010	FEM 60° CONE 1P 45° ELBOW 5/8".H 5/8 BSP
BW23.3042.1212	FEM 60° CONE 1P 45° ELBOW 3/4".H 3/4 BSP
BW23.3042.1616	FEM 60° CONE 1P 45° ELBOW 1".H 1 BSP

BSP 60 DEG SWIVEL 90 DEG ELBOW FEMALE INSERT

Part No.	Description
BW23.3092.0404	FEM 60° CONE 1P 90° ELBOW 1/4".H 1/4 BSP
BW23.3092.0406	FEM 60° CONE 1P 90° ELBOW 1/4".H 3/8 BSP
BW23.3092.0606	FEM 60° CONE 1P 90° ELBOW 3/8".H 3/8 BSP
BW23.3092.0608	FEM 60° CONE 1P 90° ELBOW 3/8".H 1/2 BSP
BW23.3092.0808	FEM 60° CONE 1P 90° ELBOW 1/2".H 1/2 BSP
BW23.3092.1010	FEM 60° CONE 1P 90° ELBOW 5/8".H 5/8 BSP
BW23.3092.1212	FEM 60° CONE 1P 90° ELBOW 3/4".H 3/4 BSP
BW23.3092.1616	FEM 60° CONE 1P 90° ELBOW 1".H 1 BSP

BSP 60 DEG MALE INSERT

Part No.	Description
BW23.0100.0404	MALE 60° CONE 1P STR 1/4".H 1/4 BSP
BW23.0100.0406	MALE 60° CONE 1P STR 1/4".H 3/8 BSP
BW23.0100.0606	MALE 60° CONE 1P STR 3/8".H 3/8 BSP
BW23.0100.0608	MALE 60° CONE 1P STR 3/8".H 1/2 BSP
BW23.0100.0808	MALE 60° CONE 1P STR 1/2".H 1/2 BSP
BW23.0100.1010	MALE 60° CONE 1P STR 5/8".H 5/8 BSP
BW23.0100.1212	MALE 60° CONE 1P STR 3/4".H 3/4 BSP
BW23.0100.1616	MALE 60° CONE 1P STR 1".H 1 BSP

SERIES 26 INTERLOCK INSERTS - BSPP

MALE BSPP INSERT

Part No.	Description
26.0100.1212	MALE 60° CONE STR 3/4".H 3/4 BSP
26.0100.1616	MALE 60° CONE STR 1".H 1 BSP
26.0100.2020	MALE 60° CONE STR 1-1/4".H 1-1/4 BSP
26.0100.2424	MALE 60° CONE STR 1-1/2".H 1-1/2 BSP
26.0100.3232	MALE 60° CONE STR 2".H 2 BSP

FEMALE BSPP O-RING INSERT

Part No.	Description
26.3112.1212	FEM 60° CONE STR 3/4".H 3/4 BSP
26.3112.1616	FEM 60° CONE STR 1".H 1 BSP
26.3112.2020	FEM 60° CONE STR 1-1/4".H 1-1/4 BSP
26.3112.2424	FEM 60° CONE STR 1-1/2".H 1-1/2 BSP
26.3112.3232	FEM 60° CONE STR 2".H 2 BSP

45 DEG FEMALE BSPP O-RING INSERT

Part No.	Description
26.3142.1212	FEM 60° CONE 45° ELBOW 3/4".H 3/4 BSP
26.3142.1616	FEM 60° CONE 45° ELBOW 1".H 1 BSP
26.3142.2020	FEM 60° CONE 45° ELBOW 1-1/4".H 1-1/4 BSP
26.3142.2424	FEM 60° CONE 45° ELBOW 1-1/2".H 1-1/2 BSP
26.3142.3232	FEM 60° CONE 45° ELBOW 2".H 2 BSP

90 DEG FEMALE BSPP O-RING INSERT

Part No.	Description
26.3192.1212	FEM 60° CONE 90° ELBOW 3/4".H 3/4 BSP
26.3192.1616	FEM 60° CONE 90° ELBOW 1".H 1 BSP
26.3192.2020	FEM 60° CONE 90° ELBOW 1-1/4".H 1-1/4 BSP
26.3192.2424	FEM 60° CONE 90° ELBOW 1-1/2".H 1-1/2 BSP
26.3192.3232	FEM 60° CONE 90° ELBOW 2".H 2 BSP
26.2000.1212	FEM JIC STR 3/4".H 11/16"-12

SERIES 26 INTERLOCK INSERTS - JIC

MALE JIC 37 DEG INSERT

Part No.	Description
26.2000.1616	FEM JIC STR 1".H 1.5/16"-12
26.2000.2020	FEM JIC STR 1-1/4".H 1.5/8"-12
26.2000.2424	FEM JIC STR 1-1/2".H 1.7/8"-12
26.2000.3232	FEM JIC STR 2".H 2.1/2"-12

FEMALE JIC 37 DEG INSERT

Part No.	Description
26.4012.1212	FEM JIC STR 3/4".H 11/16"-12
26.4012.1616	FEM JIC STR 1".H 1.5/16"-12
26.4012.2020	FEM JIC STR 1-1/4".H 1.5/8"-12
26.4012.2424	FEM JIC STR 1-1/2".H 1.7/8"-12
26.4012.3232	FEM JIC STR 2".H 2.1/2"-12

45 DEG SWEPT FEMALE JIC 37 DEG INSERT

Part No.	Description
26.4042.1212	FEM JIC 45° ELBOW 3/4".H 11/16"-12
26.4042.1616	FEM JIC 45° ELBOW 1".H 1.5/16"-12
26.4042.2020	FEM JIC 45° ELBOW 1-1/4".H 1.5/8"-12
26.4042.2424	FEM JIC 45° ELBOW 1-1/2".H 1.7/8"-12
26.4042.3232	FEM JIC 45° ELBOW 2".H 2.1/2"-12

90 DEG SWEPT FEMALE JIC 37 DEG INSERT

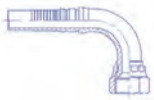

Part No.	Description
26.4092.1212	FEM JIC 90° ELBOW 3/4".H 11/16"-12
26.4092.1616	FEM JIC 90° ELBOW 1".H 1.5/16"-12
26.4092.2020	FEM JIC 90° ELBOW 1-1/4".H 1.5/8"-12
26.4092.2424	FEM JIC 90° ELBOW 1-1/2".H 1.7/8"-12
26.4092.3232	FEM JIC 90° ELBOW 2".H 2.1/2"-12

SERIES 26 INTERLOCK INSERTS - ORFS SWIVEL

FEMALE ORFS SWIVEL INSERT

Part No.	Description
26.4414.1212	FEM ORFS STR 3/4".H 1.3/16"-14
26.4414.1616	FEM ORFS STR 1".H 1.7/16"-12
26.4414.2020	FEM ORFS STR 1-1/4".H 1.11/16"-12
26.4414.2424	FEM ORFS STR 1-1/2".H 2"-12

45 DEG SWEPT FEMALE ORFS INSERT

Part No.	Description
26.4444.1212	FEM ORFS 45° ELBOW 3/4".H 1.3/16"-14
26.4444.1616	FEM ORFS 45° ELBOW 1".H 1.7/16"-12
26.4444.2020	FEM ORFS 45° ELBOW 1-1/4".H 1.11/16"-12
26.4444.2424	FEM ORFS 45° ELBOW 1-1/2".H 2"-12

90 DEG SWEPT FEMALE ORFS INSERT

Part No.	Description
26.4494.1212	FEM ORFS 90° ELBOW 3/4".H 1.3/16"-14
26.4494.1616	FEM ORFS 90° ELBOW 1".H 1.7/16"-12
26.4494.2020	FEM ORFS 90° ELBOW 1-1/4".H 1.11/16"-12
26.4494.2424	FEM ORFS 90° ELBOW 1-1/2".H 2"-12

SERIES 26 INTERLOCK INSERTS - SAE FLANGE

STRAIGHT SAE 3000 FLANGE INSERT

Part No.	Description
26.7013.1212	3KFL 3/4".H 3/4" SAE FLANGE
26.7013.1216	3KFL 3/4".H 1" SAE FLANGE
26.7013.1616	3KFL 1".H 1" SAE FLANGE
26.7013.1620	3KFL 1".H 1-1/4" SAE FLANGE
26.7013.2020	3KFL 1-1/4".H 1-1/4" SAE FLANGE
26.7013.2024	3KFL 1-1/4".H 1-1/2" SAE FLANGE
26.7013.2424	3KFL 1-1/2".H 1-1/2" SAE FLANGE
26.7013.2432	3KFL 1-1/2".H 2" SAE FLANGE
26.7013.3232	3KFL 2".H 2" SAE FLANGE

STRAIGHT SAE 6000 FLANGE INSERT

Part No.	Description
26.7016.1212	6KFL 3/4".H 3/4" SAE FLANGE
26.7016.1216	6KFL 3/4".H 1" SAE FLANGE
26.7016.1616	6KFL 1".H 1" SAE FLANGE
26.7016.1620	6KFL 1".H 1-1/4" SAE FLANGE
26.7016.2020	6KFL 1-1/4".H 1-1/4" SAE FLANGE
26.7016.2024	6KFL 1-1/4".H 1-1/2" SAE FLANGE
26.7016.2424	6KFL 1-1/2".H 1-1/2" SAE FLANGE
26.7016.2432	6KFL 1-1/2".H 2" SAE FLANGE
26.7016.3232	6KFL 2".H 2" SAE FLANGE

45 DEG SWEPT SAE 3000 FLANGE INSERT

Part No.	Description
26.7043.1212	3KFL45° ELBOW 3/4".H 3/4" SAE FLANGE
26.7043.1216	3KFL45° ELBOW 3/4".H 1" SAE FLANGE
26.7043.1616	3KFL45° ELBOW 1".H 1" SAE FLANGE
26.7043.1620	3KFL45° ELBOW 1".H 1-1/4" SAE FLANGE
26.7043.2020	3KFL45° ELBOW 1-1/4".H 1-1/4" SAE FLANGE
26.7043.2024	3KFL45° ELBOW 1-1/4".H 1-1/2" SAE FLANGE
26.7043.2424	3KFL45° ELBOW 1-1/2".H 1-1/2" SAE FLANGE
26.7043.2432	3KFL45° ELBOW 1-1/2".H 2" SAE FLANGE
26.7043.3232	3KFL45° ELBOW 2".H 2" SAE FLANGE

45 DEG SWEPT SAE 6000 FLANGE INSERT

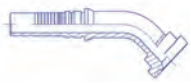

Part No.	Description
26.7046.1212	6KFL45° ELBOW 3/4".H 3/4" SAE FLANGE
26.7046.1216	6KFL45° ELBOW 3/4".H 1" SAE FLANGE
26.7046.1616	6KFL45° ELBOW 1".H 1" SAE FLANGE
26.7046.1620	6KFL45° ELBOW 1".H 1-1/4" SAE FLANGE
26.7046.2020	6KFL45° ELBOW 1-1/4".H 1-1/4" SAE FLANGE
26.7046.2024	6KFL45° ELBOW 1-1/4".H 1-1/2" SAE FLANGE
26.7046.2424	6KFL45° ELBOW 1-1/2".H 1-1/2" SAE FLANGE
26.7046.2432	6KFL45° ELBOW 1-1/2".H 2" SAE FLANGE
26.7046.3232	6KFL45° ELBOW 2".H 2" SAE FLANGE

90 DEG SWEPT SAE 3000 FLANGE INSERT

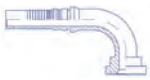

Part No.	Description
26.7093.1212	3KFL90° ELBOW 3/4".H 3/4" SAE FLANGE
26.7093.1216	3KFL90° ELBOW 3/4".H 1" SAE FLANGE
26.7093.1616	3KFL90° ELBOW 1".H 1" SAE FLANGE
26.7093.1620	3KFL90° ELBOW 1".H 1-1/4" SAE FLANGE
26.7093.2020	3KFL90° ELBOW 1-1/4".H 1-1/4" SAE FLANGE
26.7093.2024	3KFL90° ELBOW 1-1/4".H 1-1/2" SAE FLANGE
26.7093.2424	3KFL90° ELBOW 1-1/2".H 1-1/2" SAE FLANGE
26.7093.2432	3KFL90° ELBOW 1-1/2".H 2" SAE FLANGE
26.7093.3232	3KFL90° ELBOW 2".H 2" SAE FLANGE

90 DEG SWEPT SAE 3000 FLANGE INSERT

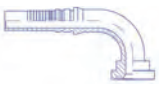

Part No.	Description
26.7096.1212	6KFL90° ELBOW 3/4".H 3/4" SAE FLANGE
26.7096.1216	6KFL90° ELBOW 3/4".H 1" SAE FLANGE
26.7096.1616	6KFL90° ELBOW 1".H 1" SAE FLANGE
26.7096.1620	6KFL90° ELBOW 1".H 1-1/4" SAE FLANGE
26.7096.2020	6KFL90° ELBOW 1-1/4".H 1-1/4" SAE FLANGE
26.7096.2024	6KFL90° ELBOW 1-1/4".H 1-1/2" SAE FLANGE
26.7096.2424	6KFL90° ELBOW 1-1/2".H 1-1/2" SAE FLANGE
26.7096.2432	6KFL90° ELBOW 1-1/2".H 2" SAE FLANGE
26.7096.3232	6KFL90° ELBOW 2".H 2" SAE FLANGE

SERIES 26 INTERLOCK INSERTS - METRIC

MALE METRIC HEAVY SERIES INSERT

Part No.	Description
26.1100.1236	MALE STR 3/4".H 25H 36X2
26.1100.1642	MALE STR 1".H 30H 42X2
26.1100.2052	MALE STR 1-1/4".H 38H 52x2

FEMALE METRIC HEAVY SERIES INSERT

Part No.	Description
26.5113.1236	FEM 24° O-RING STR 3/4".H 25H 36X2
26.5113.1642	FEM 24° O-RING STR 1".H 30H 42X2
26.5113.2052	FEM 24° O-RING STR 1-1/4".H 38H 52x2

45 DEG FEMALE METRIC HEAVY SERIES INSERT

Part No.	Description
26.5143.1236	FEM 24° O-RING 45° ELBOW 3/4".H 25H 36X2
26.5143.1642	FEM 24° O-RING 45° ELBOW 1".H 30H 42X2
26.5143.2052	FEM 24° O-RING 45° ELBOW 1-1/4".H 38H 52x2

90 DEG FEMALE METRIC HEAVY SERIES INSERT

Part No.	Description
26.5193.1236	FEM 24° O-RING 90° ELBOW 3/4".H 25H 36X2
26.5193.1642	FEM 24° O-RING 90° ELBOW 1".H 30H 42X2
26.5193.2052	FEM 24° O-RING 90° ELBOW 1-1/4".H 38H 52x2

NOTE: Further inserts such as JIC versions are available on request

Hydrastore
Hydraulic Systems & Components

Online shop now open

Every stock item in this catalogue is now available online for next day delivery

www.hydrastore.co.uk/shop

STOCK HOSE ORDERING SELECTOR & GUIDE

Hydrastore's stockholding of global leaders Gates' hoses and associated components is summarised in the table below. With an extensive range of hose types and sizes the table shows at a glance the pressure capability for each hose size along with the types of hose ends required.

Further detailed specifications are then given for each hose over the next pages as well as a comprehensive selection of inserts to meet the application requirements.

Hose	Hose Type	Hose diameter								Ferrule required	Insert Type
		1/4" (-4)	3/8" (-6)	1/2" (-8)	3/4" (-12)	1" (-16)	1 1/4" (-20)	1 1/2" (-24)	2" (-32)		
Pro1T	SC (1 wire compact)	225	180	160	105	88				Yes	EX
ProV	2SC (2 wire compact)	400	330	275	215	165				Yes	EX
M3K	Constant pressure wire braid	225	225	225	225	225				No	G
M4K		280	280	280	280					No	G
MXG5K-XTP			350	350	350	350				Yes	GS
EFG3K	Multi Spiral						210			Yes	GS
								210		Yes	GSP
EFG5K			350	350	350	350	350			Yes	GS
EFG6K			420	420	420	420	420			Yes	GS
GMV	Suction				24	20	17			No	G
								10	10	Yes	GSP

Note: Numbers show pressure capability in bars

- 0-49 bar
- 50-99 bar
- 100 -199bar
- 200-299bar
- 300-399bar
- 400+Bar

Each hose needs either a 2 piece or 1 piece insert for both ends of the hose for attaching to the relevant machinery/ equipment.

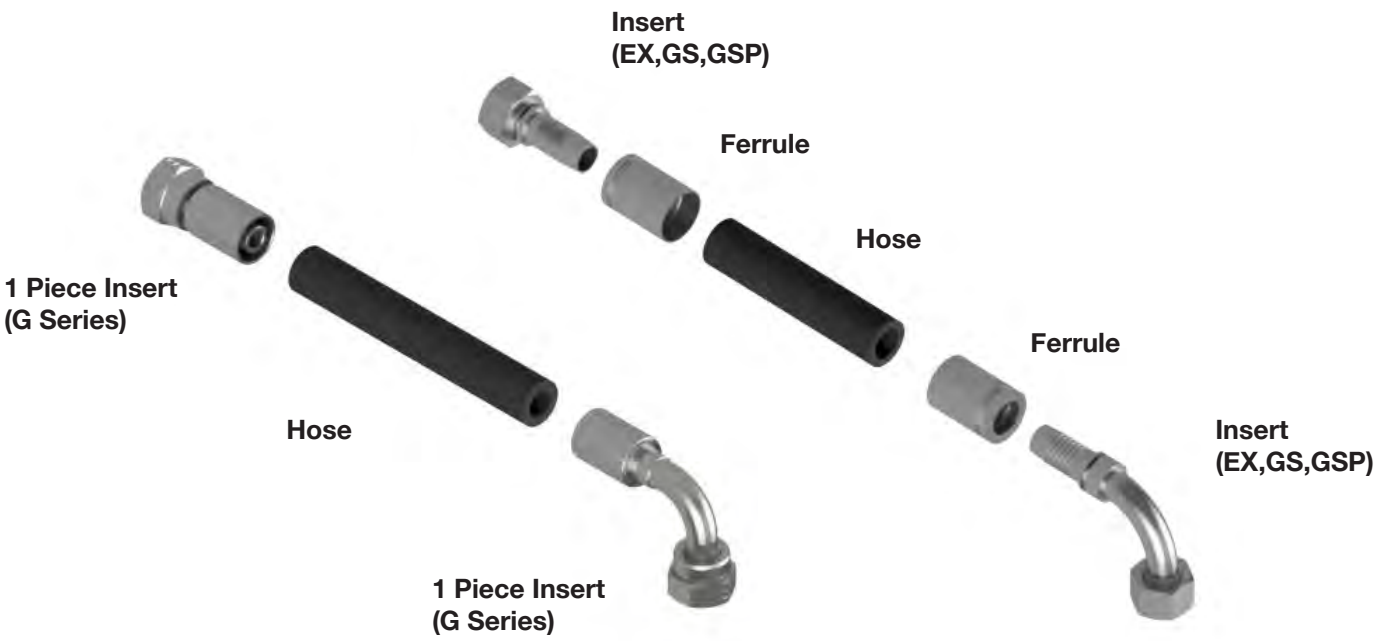

NOTE: All hose sold in metre units eg 225mm = 0.225m

NOTE See Overview section for Gates Assembly Machinery available to order.

PRO1T & PROV HOSES

	Pro1T	ProV
Pressure capability	88 to 225 bar	165 to 400 bar
Recommended for	High pressure hydraulic applications, easy to route and install in tight areas.	
Tube	NBR (Nitrile) based.	
Reinforcement	Braided high tensile steel.	
Cover	SVR (Styrene-Butadiene) based. MSHA approved	NBR/PVC based. MSHA approved
Temperature range	-40 deg C to +100 deg C	
Standards	EN 857 1SC. ISO 11237 1SC	EN 857 2SC. SAE 100 R16. ISO 11237 2SC R16
Associated hose ends	EX Series – Ferrule required.	

Hose Ordering Chart

Part No.	Description	Max Pressure (bar)	Min. Bend Radius (mm)	Weight (kg/m)	Ferrule Part No.	Insert Type
4PRO1T	1/4" EN857 1SC PRO SERIES HOSE	225	75	0.19	4EX1F-1	EX
6PRO1T	3/8" EN857 1SC PRO SERIES HOSE	180	90	0.28	6EX1F-1	EX
8PRO1T	1/2" EN857 1SC PRO SERIES HOSE	160	130	0.34	8EX1F-1	EX
12PRO1T	3/4" EN857 1SC PRO SERIES HOSE	105	180	0.50	12EX1F-1	EX
16PRO1T	1" EN857 1SC PRO SERIES HOSE	88	230	0.82	16EX1F-1	EX
4PROV	1/4" EN857 PRO V SERIES HOSE	400	50	0.25	4EX1F-1	EX
6PROV	3/8" EN857 PRO V SERIES HOSE	330	65	0.33	6EXVF-1	EX
8PROV	1/2" EN857 PRO V SERIES HOSE	275	90	0.46	8EXVF-1	EX
12PROV	3/4" EN857 PRO V SERIES HOSE	215	120	0.67	12EX1F-1	EX
16PROV	1" EN857 PRO V SERIES HOSE	165	150	1.02	16EXVF-1	EX

NOTE: See next section for insert part numbers

FERRULES Ordering Chart

Part No.	Description
4EX1-F	1/4" 1SC / 2SC FERRULE
6EX1-F	3/8" 1SC / 2SC FERRULE
8EX1-F	1/2" 1SC / 2SC FERRULE
12EX1-F	3/4" 1SC / 2SC FERRULE
16EX1-F	1" 1SC / 2SC FERRULE
6EXVF-1	3/8" PROV FERRULE
8EXVF-1	1/2" PROV FERRULE
16EXVF-1	1" PROV FERRULE

EX SERIES INSERTS - BSP

FEMALE BSP - 60 DEG CONE - STRAIGHT INSERT

Part No.	Description
4EX4FBSPPX	FEM 60° CONE STR 1/4 .H 1/4 BSP
6EX6FBSPPX	FEM 60° CONE STR 3/8 .H 3/8 BSP
8EX8FBSPPX	FEM 60° CONE STR 1/2 .H 1/2 BSP
12EX12FBSPPX	FEM 60° CONE STR 3/4 .H 3/4 BSP
16EX16FBSPPX	FEM 60° CONE STR 1 .H 1 BSP

MALE BSP - 60 DEG CONE - STRAIGHT INSERT

Part No.	Description
4EX4MBSPP	MALE 60° CONE STR 1/4 .H 1/4 BSP
6EX6MBSPP	MALE 60° CONE STR 3/8 .H 3/8 BSP
8EX8MBSPP	MALE 60° CONE STR 1/2 .H 1/2 BSP
12EX12MBSPP	MALE 60° CONE STR 3/4 .H 3/4 BSP
16EX16MBSPP	MALE 60° CONE STR 1 .H 1 BSP

FEMALE BSP - 60 DEG CONE - 45 DEG ELBOW INSERT

Part No.	Description
4EX4FBSPPX45	FEM 60° CONE 45 ELBOW 1/4 .H 1/4 BSP
6EX6FBSPPX45	FEM 60° CONE 45 ELBOW 3/8 .H 3/8 BSP
8EX8FBSPPX45	FEM 60° CONE 45 ELBOW 1/2 .H 1/2 BSP
12EX12FBSPPX45	FEM 60° CONE 45 ELBOW 3/4 .H 3/4 BSP
16EX16FBSPPX45	FEM 60° CONE 45 ELBOW 1 .H 1 BSP

BANJO BSP INSERT

Part No.	Description
4EX4BSPBJ	BANJO 1/4 .H 1/4 BSP
6EX6BSPBJ	BANJO 3/8 .H 3/8 BSP
8EX8BSPBJ	BANJO 1/2 .H 1/2 BSP

FEMALE BSP - 60 DEG CONE - 90 DEG ELBOW INSERT

Part No.	Description
4EX4FBSPPX90	FEM 60° CONE 90 ELBOW 1/4 .H 1/4 BSP
6EX6FBSPPX90	FEM 60° CONE 90 ELBOW 3/8 .H 3/8 BSP
8EX8FBSPPX90	FEM 60° CONE 90 ELBOW 1/2 .H 1/2 BSP
12EX12FBSPPX90	FEM 60° CONE 90 ELBOW 3/4 .H 3/4 BSP
16EX16FBSPPX90	FEM 60° CONE 90 ELBOW 1 .H 1 BSP

EX SERIES INSERTS - METRIC

STRAIGHT FEMALE METRIC

Part no.	Description
LIGHT SERIES	
4EX6FDLORX	FEM 24° O-RING L/SERIES 1/4 .H 6L STR 12X1.5
4EX8FDLORX	FEM 24° O-RING L/SERIES 1/4 .H 8L STR 14X1.5
4EX10FDLORX	FEM 24° O-RING L/SERIES 1/4 .H 10L STR 16X1.5
6EX10FDLORX	FEM 24° O-RING L/SERIES 3/8 .H 10L STR 16X1.5
6EX12FDLORX	FEM 24° O-RING L/SERIES 3/8 .H 12L STR 18X1.5
8EX15FDLORX	FEM 24° O-RING L/SERIES 1/2 .H 15L STR 22X1.5
8EX18FDLORX	FEM 24° O-RING L/SERIES 1/2 .H 18L STR 26X1.5
12EX22FDLORX	FEM 24° O-RING L/SERIES 3/4 .H 22L STR 30X2
16EX28FDLORX	FEM 24° O-RING L/SERIES 1 .H 28L STR 36X2
HEAVY SERIES	
4EX8FDHORX	FEM 24° O-RING H/SERIES 1/4 .H 8S STR 16X1.5
4EX10FDHORX	FEM 24° O-RING H/SERIES 1/4 .H 10S STR 18X1.5
6EX10FDHORX	FEM 24° O-RING H/SERIES 3/8 .H 10S STR 18X1.5
8EX16FDHORX	FEM 24° O-RING H/SERIES 1/2 .H 16S STR 24X1.5
12EX20FDHORX	FEM 24° O-RING H/SERIES 3/4 .H 20S STR 30X2
12EX25FDHORX	FEM 24° O-RING H/SERIES 3/4 .H 25S STR 36X2
16EX25FDHORX	FEM 24° O-RING H/SERIES 1 .H 25s STR 36X3
16EX30FDHORX	FEM 24° O-RING H/SERIES 1 .H 30S STR 42X2

90 DEGREE FEMALE METRIC

Part no.	Description
LIGHT SERIES	
4EX6FDLORX90	FEM 24° O-RING L/SERIES 1/4 .H 6L 90° 12X1.5
4EX8FDLORX90	FEM 24° O-RING L/SERIES 1/4 .H 8L 90° 14X1.5
4EX10FDLORX90	FEM 24° O-RING L/SERIES 1/4 .H 10L 90° 16X1.5
6EX10FDLORX90	FEM 24° O-RING L/SERIES 3/8 .H 10L 90° 16X1.5
6EX12FDLORX90	FEM 24° O-RING L/SERIES 3/8 .H 12L 90° 18X1.5
8EX15FDLORX90	FEM 24° O-RING L/SERIES 1/2 .H 15L 90° 22X1.5
8EX18FDLORX90	FEM 24° O-RING L/SERIES 1/2 .H 18L 90° 26X1.5
12EX22FDLORX90	FEM 24° O-RING L/SERIES 3/4 .H 22L 90° 30X2
16EX28FDLORX90	FEM 24° O-RING L/SERIES 1 .H 28L 90° 36X2
HEAVY SERIES	
4EX8FDHORX90	FEM 24° O-RING H/SERIES 1/4 .H 8S 90° 16X1.5
4EX10FDHORX90	FEM 24° O-RING H/SERIES 1/4 .H 10S 90° 18X1.5
6EX10FDHORX90	FEM 24° O-RING H/SERIES 3/8 .H 10S 90° 18X1.5
6EX12FDHORX90	FEM 24° O-RING H/SERIES 3/8 .H 12S 90° 20X1.5
8EX16FDHORX90	FEM 24° O-RING H/SERIES 1/2 .H 16S 90° 24X1.5
12EX20FDHORX90	FEM 24° O-RING H/SERIES 3/4 .H 20S 90° 30X2
12EX25FDHORX90	FEM 24° O-RING H/SERIES 3/4 .H 25S 90° 36X2
16EX25FDHORX90	FEM 24° O-RING H/SERIES 1 .H 25s 90° 36X3
16EX30FDHORX90	FEM 24° O-RING H/SERIES 1 .H 30S 90° 42X2

45 DEGREE FEMALE METRIC

Part no.	Description
LIGHT SERIES	
4EX6FDLORX45	FEM 24° O-RING L/SERIES 1/4 .H 6L 45° 12X1.5
4EX8FDLORX45	FEM 24° O-RING L/SERIES 1/4 .H 8L 45° 14X1.5
4EX10FDLORX45	FEM 24° O-RING L/SERIES 1/4 .H 10L 45° 16X1.5
6EX10FDLORX45	FEM 24° O-RING L/SERIES 3/8 .H 10L 45° 16X1.5
6EX12FDLORX45	FEM 24° O-RING L/SERIES 3/8 .H 12L 45° 18X1.5
8EX15FDLORX45	FEM 24° O-RING L/SERIES 1/2 .H 15L 45° 22X1.5
8EX18FDLORX45	FEM 24° O-RING L/SERIES 1/2 .H 18L 45° 26X1.5
12EX22FDLORX45	FEM 24° O-RING L/SERIES 3/4 .H 22L 45° 30X2
16EX28FDLORX45	FEM 24° O-RING L/SERIES 1 .H 28L 45° 36X2
HEAVY SERIES	
4EX8FDHORX45	FEM 24° O-RING H/SERIES 1/4 .H 8S 45° 16X1.5
4EX10FDHORX45	FEM 24° O-RING H/SERIES 1/4 .H 10S 45° 18X1.5
6EX10FDHORX45	FEM 24° O-RING H/SERIES .H 10S 45° 18X1.5
6EX12FDHORX45	FEM 24° O-RING H/SERIES 3/8 .H 12S 45° 20X1.5
8EX16FDHORX45	FEM 24° O-RING H/SERIES 1/2 .H 16S 45° 24X1.5
12EX20FDHORX45	FEM 24° O-RING H/SERIES 3/4 .H 20S 45° 30X2
12EX25FDHORX45	FEM 24° O-RING H/SERIES 3/4 .H 25S 45° 36X2
16EX25FDHORX45	FEM 24° O-RING H/SERIES 1 .H 25s 45° 36X3
16EX30FDHORX45	FEM 24° O-RING H/SERIES 1 .H 30S 45° 42X2

MALE METRIC

Part no.	Description
LIGHT SERIES	
4EX6MDL	Male 24° O-RING L/SERIES 1/4 .H 6L STR 12X1.5
4EX8MDL	Male 24° O-RING L/SERIES 1/4 .H 8L STR 14X1.5
4EX10MDL	Male 24° O-RING L/SERIES 1/4 .H 10L STR 16X1.5
6EX10MDL	Male 24° O-RING L/SERIES 3/8 .H 10L STR 16X1.5
6EX12MDL	Male 24° O-RING L/SERIES 3/8 .H 12L STR 18X1.5
8EX15MDL	Male 24° O-RING L/SERIES 1/2 .H 15L STR 22X1.5
8EX18MDL	Male 24° O-RING L/SERIES 1/2 .H 18L STR 26X1.5
12EX22MDL	Male 24° O-RING L/SERIES 3/4 .H 22L STR 30X2
16EX28MDL	FEM 24° O-RING L/SERIES 1 .H 28L STR 36X2
HEAVY SERIES	
4EX8MDH	MALE 24° O-RING H/SERIES 1/4 .H 8S STR 16X1.5
4EX10MDH	MALE 24° O-RING H/SERIES 1/4 .H 10S STR 18X1.5
6EX10MDH	MALE 24° O-RING H/SERIES 3/8 .H 10S STR 18X1.5
6EX12MDH	MALE 24° O-RING H/SERIES 3/8 .H 12S STR 20X1.5
8EX16MDH	MALE 24° O-RING H/SERIES 1/2 .H 16S STR 24X1.5
12EX20MDH	MALE 24° O-RING H/SERIES 3/4 .H 20S STR 30X2
12EX25MDH	MALE 24° O-RING H/SERIES 3/4 .H 25S STR 36X2
16EX25MDH	MALE 24° O-RING H/SERIES 1 .H 25s STR 36X3
16EX30MDH	MALE 24° O-RING H/SERIES 1 .H 30S STR 42X2

M3K/ M4K/ MXG5K-XTP HOSES

	M3K	M4K	MXG5K-XTP
Pressure capability	225 bar for all sizes	280 bar for all sizes	350 bar for all sizes
Recommended for	High pressure hydraulic applications. Easy to route and install in extremely tight areas.		High pressure hydraulic applications. Easy to route and to install in tight areas. Alternative to spiral hoses in high pressure lines where flexibility is required.
Tube	NBR (Nitrile) based.		
Reinforcement	Two braids of high tensile steel wire.		Woven spiral reinforcement with four layers of high tensile steel wire.
Cover	MBR/PVC based. MSHA approved.		Black XtraTuff Plus synthetic rubber MSHA approved.
Temperature range	-40 deg C to + 100 deg C constant and + 121 deg C intermittent.		-40 deg C to +121 deg C
Associated Hose Ends	G (Megacrimp) - No Ferrule required		GS (GlobalSpiral) – Ferrule required

M3K Ordering Chart

Part No.	Description	Max Pressure (bar)	Min. Bend Radius (mm)	Weight (kg/m)	Ferrule Part No.	Insert Type
4M3KX	1/4” M3K HOSE	210	40	0.17	N/A	G
6M3KX	3/8” M3K HOSE	210	50	0.28	N/A	G
8M3KX	1/2” M3K HOSE	210	70	0.41	N/A	G
12M3KX	3/4” M3K HOSE	210	95	0.91	N/A	G
16M3KX	1” M3K HOSE	210	115	1.55	N/A	G

M4K Ordering Chart

Part No.	Description	Max Pressure (bar)	Min. Bend Radius (mm)	Weight (kg/m)	Ferrule Part No.	Insert Type
4M4KX	1/4” M4K HOSE	280	40	0.33	N/A	G
6M4KX	3/8” M4K HOSE	280	50	0.46	N/A	G
8M4KX	1/2” M4K HOSE	280	70	0.51	N/A	G
12M4KX	3/4” M4K HOSE	280	95	0.93	N/A	G

MXG5K-XTP Ordering Chart

Part No.	Description	Max Pressure (bar)	Min. Bend Radius (mm)	Weight (kg/m)
6MXG5K-XTP	3/8” MXG5K-XTP HOSE	350	65	0.438
8MXG5K-XTP	1/2” MXG5K-XTP HOSE	350	90	0.61
12MXG5K-XTP	3/4” MXG5K-XTP HOSE	350	120	1.07
16MXG5K-XTP	1” MXG5K-XTP HOSE	350	150	1.83

Ferrule Ordering Chart

	Part No.	Description	Insert Type
+	6GS1F-4	3/8” 4 SH FERRULE	GS
+	8GS1F-4	1/2” 4 SH FERRULE	GS
+	12GS1F-4	3/4” 4 SH FERRULE	GS
+	16GS1F-4	1” 4 SH FERRULE	GS

NOTE: See next section for inserts information and part numbers

EFG3K/ EFG5K/ EFG6K HOSES

	EFG3K	EFG5K	EFG6K
Pressure capability	210 bar for all sizes	350 bar for all sizes	420 bar for all sizes
Recommended for	Extremely high pressure and high impulse hydraulic applications.		
Tube	NBR (Nitrile) based.		
Reinforcement	Four (six for -20 to -32) alternating layers of spiralled, high tensile steel wire		
Cover	CR (Chloroprene) based. MSHA approved.		
Temperature Range	-40 to +121 0C.		
Standards	Exceeds ISO 3862 R12. EN 856 R12. SAE 100R12	Exceeds ISO 3862 R13. EN 856 R13. SAE 100R13	Exceeds ISO 3862 R15. SAE 100R15
Associated Hose Ends	-20 GS (GlobalSpiral) -24 GSP (GlobalSpiral Plus) Ferrule required	-6 to -20 GS (GlobalSpiral) Ferrule required	

EFG3K Ordering Chart

Part No.	Description	Max Pressure (bar)	Min. Bend Radius (mm)	Weight (kg/m)
20EFG3K	1 1/4" EFG3K HOSE	210	210	2.82
24EFG3K	1 1/2" EFG3K HOSE	210	250	3.2

Ferrule Ordering Chart

	Part No.	Description	Insert Type
+	20GS1F-4	1-1/4" 4SH FERRULE	GS
+	24GSP1F-4	1-1/2" 4 SH FERRULE	GSP

EFG5K Ordering Chart

Part No.	Description	Max Pressure (bar)	Min. Bend Radius (mm)	Weight (kg/m)
6EFG5K	3/8" EFG5K HOSE	350	65	0.71
8EFG5K	1/2" EFG5K HOSE	350	90	0.89
12EFG5K	3/4" EFG5K HOSE	350	120	1.44
16EFG5K	1" EFG5K HOSE	350	150	2.23
20EFG5K	1 1/4" EFG5K HOSE	350	210	3.99

Ferrule Ordering Chart

	Part No.	Description	Insert Type
+	6GS1F-4	3/8" 4 SH FERRULE	GS
+	8GS1F-4	1/2" 4 SH FERRULE	GS
+	12GS1F-4	3/4" 4 SH FERRULE	GS
+	16GS1F-4	1" 4 SH FERRULE	GS
+	20GS1F-4	1-1/4" 4 SH FERRULE	GS

EFG6K Ordering Chart

Part No.	Description	Max Pressure (bar)	Min. Bend Radius (mm)	Weight (kg/m)
6EFG6K	3/8" EFG6K HOSE	420	65	0.71
8EFG6K	1/2" EFG6K HOSE	420	90	0.89
12EFG6K	3/4" EFG6K HOSE	420	120	1.44
16EFG6K	1" EFG6K HOSE	420	150	2.23
20EFG6K	1 1/4" EFG6K HOSE	420	210	3.99

Ferrule Ordering Chart

	Part No.	Description	Insert Type
+	6GS1F-4	3/8" 4 SH FERRULE	GS
+	8GS1F-4	1/2" 4 SH FERRULE	GS
+	12GS1F-4	3/4" 4 SH FERRULE	GS
+	16GS1F-4	1" 4 SH FERRULE	GS
+	20GS1F-6	1-1/4" 6 SH FERRULE	GS

NOTE: See next section for inserts information and part numbers

GMV HOSES

Pressure capability	8 – 24 bar
Recommended for	Petroleum and water based hydraulic fluids in suction lines or in low pressure return lines.
Tube	NBR (Nitrile) based
Reinforcement	-12, -16, -20: fibre braid reinforced with helical spiral wire to prevent collapse; -24, -32: spiralled fibre reinforced with helical spiral wire to prevent collapse.
Cover	CR (Chlorprene) based. MSHA approved.
Temperature range	-40 deg C to +135 dec C constant and + 150 deg C intermittent.
Standards	SAE 100R4
Associate hose ends	-12 to -20: G Series (Megacrimp) – No ferrule required -24, -32: GSP (GlobalSpriral Plus) - Ferrule required

GMV Ordering chart

Part No.	Description	Max Pressure (bar)	Min. Bend Radius (mm)	Weight (kg/m)
GMV MGFlex 3/4"xRL30	3/4" GMV HOSE	24	19	0.6
GMV MGFlex 1"xRL30	1" GMV HOSE	20	25	0.7
GMV MGFlex 1.1/4xRL30	1 1/4" GMV HOSE	17	32	0.9
GMV MGFlex 1.1/2xCL30	1 1/2" GMV HOSE	10	38	1.3
GMV MGFlex 2"xCL30	2" GMV HOSE	10	51	1.4

Ferrule Ordering Chart

	Part No.	Description	Insert Type
+	N/A	N/A	G
+	N/A	N/A	G
+	N/A	N/A	G
+	24GSP1F-2	1-1/2" 2SH FERRULE	GSP
+	32GSP1F-2	2" 2SH FERRULE	GSP

G SERIES (MEGACRIMP) ONE PIECE INSERT - BSP

60 DEG CONE - STRAIGHT FEMALE INSERT

Part No.	Description
4G4BSPORX	FEM 60° CONE STR 1/4 .H 1/4 BSP O-RING
4G6BSPORX	FEM 60° CONE STR 1/4 .H 3/8 BSP O-RING
6G6BSPORX	FEM 60° CONE STR 3/8 .H 3/8 BSP O-RING
6G8BSPORX	FEM 60° CONE STR 3/8 .H 1/2 BSP O-RING
8G8BSPORX	FEM 60° CONE STR 1/2 .H 1/2 BSP O-RING
12G12BSPORX	FEM 60° CONE STR 3/4 .H 3/4 BSP O-RING
12G16BSPORX	FEM 60° CONE STR 3/4 .H 1 BSP O-RING
16G16BSPORX	FEM 60° CONE STR 1 .H 1 BSP O-RING

60 DEG CONE - COMPACT ELBOW

Part No.	Description
4G4FBSPORX90BL	FEM 60° CONE C90 ELBOW 1/4 .H 1/4 BSP O-RING
6G6FBSPORX90BL	FEM 60° CONE C90 ELBOW 3/8 .H 3/8 BSP O-RING
8G8FBSPORX90BL	FEM 60° CONE C90 ELBOW 1/2 .H 1/2 BSP O-RING
12G12FBSPORX-90BL	FEM 60° CONE C90 ELBOW 3/4 .H 3/4 BSP O-RING
16G16FBSPORX-90BL	FEM 60° CONE C90 ELBOW 1 .H 1 BSP O-RING

60 DEG CONE - 45 DEG ELBOW INSERT

Part No.	Description
4G4BSPORX45	FEM 60° CONE 45 ELBOW 1/4 .H 1/4 BSP O-RING
6G6BSPORX45	FEM 60° CONE 45 ELBOW 3/8 .H 3/8 BSP O-RING
8G8BSPORX45	FEM 60° CONE 45 ELBOW 1/2 .H 1/2 BSP O-RING
12G12BSPORX45	FEM 60° CONE 45 ELBOW 3/4 .H 3/4 BSP O-RING
16G16BSPORX45	FEM 60° CONE 45 ELBOW 1 .H 1 BSP O-RING

60 DEG CONE - STRAIGHT MALE

Part No.	Description
4G4MBSPP	MALE 60° CONE STR 1/4 .H 1/4 BSP
6G6MBSPP	MALE 60° CONE STR 3/8 .H 3/8 BSP
8G8MBSPP	MALE 60° CONE STR 1/2 .H 1/2 BSP
12G12MBSPP	MALE 60° CONE STR 3/4 .H 3/4 BSP
16G16MBSPP	MALE 60° CONE STR 1 .H 1 BSP

60 DEG CONE - 90 DEG ELBOW INSERT

Part No.	Description
4G4BSPORX90	FEM 60° CONE 90 ELBOW 1/4 .H 1/4 BSP O-RING
4G6BSPORX90	FEM 60° CONE 90 ELBOW 1/4 .H 3/8 BSP O-RING
6G6BSPORX90	FEM 60° CONE 90 ELBOW 3/8 .H 3/8 BSP O-RING
6G8BSPORX90	FEM 60° CONE 90 ELBOW 3/8 .H 1/2 BSP O-RING
8G8BSPORX90	FEM 60° CONE 90 ELBOW 1/2 .H 1/2 BSP O-RING
12G12BSPORX90	FEM 60° CONE 90 ELBOW 3/4 .H 3/4 BSP O-RING
12G16BSPORX90	FEM 60° CONE 90 ELBOW 3/4 .H 1 BSP O-RING
16G16BSPORX90	FEM 60° CONE 90 ELBOW 1 .H 1 BSP O-RING

BANJO INSERT

Part No.	Description
4G4BSPBJ	BANJO 1/4 .H 1/4 BSP
4G6BSPBJ	BANJO 1/4 .H 3/8 BSP
6G4BSPBJ	BANJO 3/8 .H 1/4 BSP
6G6BSPBJ	BANJO 3/8 .H 3/8 BSP
6G8BSPBJ	BANJO 3/8 .H 1/2 BSP
8G8BSPBJ	BANJO 1/2 .H 1/2 BSP
12G12BSPBJ	BANJO 3/4 .H 3/4 BSP

G SERIES (MEGACRIMP) ONE PIECE INSERT - METRIC

FEMALE O-RING STRAIGHT INSERT

Part No.	Description
LIGHT SERIES	
4G6FDLORX	FEM 24° O-RING L/SERIES 1/4 .H 6L STR 12X1.5
4G8FDLORX	FEM 24° O-RING L/SERIES 1/4 .H 8L STR 14X1.5
4G10FDLORX	FEM 24° O-RING L/SERIES 1/4 .H 10L STR 16X1.5
6G10FDLORX	FEM 24° O-RING L/SERIES 3/8 .H 10L STR 16X1.5
6G12FDLORX	FEM 24° O-RING L/SERIES 3/8 .H 12L STR 18X1.5
8G15FDLORX	FEM 24° O-RING L/SERIES 1/2 .H 15L STR 22X1.5
12G18FDLORX	FEM 24° O-RING L/SERIES 3/4 .H 18L STR 26X1.5
12G22FDLORX	FEM 24° O-RING L/SERIES 3/4 .H 22L STR 30X2
16G28FDLORX	FEM 24° O-RING L/SERIES 1 .H 28L STR 36X2
20G35FDLORX	FEM 24° O-RING L/SERIES 1-1/4 .H 35L STR 45X2
HEAVY SERIES	
4G8FDHORX	FEM 24° O-RING H/SERIES 1/4 .H 8S STR 16X1.5
4G10FDHORX	FEM 24° O-RING H/SERIES 1/4 .H 10S STR 18X1.5
6G10FDHORX	FEM 24° O-RING H/SERIES 3/8 .H 10S STR 18X1.5
6G12FDHORX	FEM 24° O-RING H/SERIES 3/8 .H 12S STR 20X1.5
8G16FDHORX	FEM 24° O-RING H/SERIES 1/2 .H 16S STR 24X1.5
12G20FDHORX	FEM 24° O-RING H/SERIES 3/4 .H 20S STR 30X2
12G25FDHORX	FEM 24° O-RING H/SERIES 3/4 .H 25S STR 36X2
16G30FDHORX	FEM 24° O-RING H/SERIES 1 .H 30S STR 42X2
20G38FDHORX	FEM 24° O-RING H/SERIES 1-1/4 .H 38S STR 52X2

FEMALE O-RING 45 DEG ELBOW INSERT

Part No.	Description
LIGHT SERIES	
4G6FDLORX45	FEM 24° O-RING L/SERIES 1/4 .H 6L 45°- 12X1.5
4G8FDLORX45	FEM 24° O-RING L/SERIES 1/4 .H 8L 45°- 14X1.5
4G10FDLORX45	FEM 24° O-RING L/SERIES 1/4 .H 10L 45°- 16X1.5
6G10FDLORX45	FEM 24° O-RING L/SERIES 3/8 .H 10L 45°- 16X1.5
6G12FDLORX45	FEM 24° O-RING L/SERIES 3/8 .H 12L 45°- 18X1.5
8G15FDLORX45	FEM 24° O-RING L/SERIES 1/2 .H 15L 45°- 22X1.5
12G18FDLORX45	FEM 24° O-RING L/SERIES 3/4 .H 18L 45°- 26X1.5
12G22FDLORX45	FEM 24° O-RING L/SERIES 3/4 .H 22L 45°- 30X2
16G28FDLORX45	FEM 24° O-RING L/SERIES 1 .H 28L 45°- 36X2
20G35FDLORX45	FEM 24° O-RING L/SERIES 1-1/4 .H 35L 45°- 45X2
HEAVY SERIES	
4G8FDHORX45	FEM 24° O-RING H/SERIES 1/4 .H 8S 45°- 16X1.5
4G10FDHORX45	FEM 24° O-RING H/SERIES 1/4 .H 10S 45°- 18X1.5
6G10FDHORX45	FEM 24° O-RING H/SERIES 3/8 .H 10S 45°- 18X1.5
6G12FDHORX45	FEM 24° O-RING H/SERIES 3/8 .H 12S 45°- 20X1.5
8G16FDHORX45	FEM 24° O-RING H/SERIES 1/2 .H 16S 45°- 24X1.5
12G20FDHORX45	FEM 24° O-RING H/SERIES 3/4 .H 20S 45°- 30X2
12G25FDHORX45	FEM 24° O-RING H/SERIES 3/4 .H 25S 45°- 36X2
16G30FDHORX45	FEM 24° O-RING H/SERIES 1 .H 30S 45°- 42X2
20G38FDHORX45	FEM 24° O-RING H/SERIES 1-1/4 .H 38S 45°- 52X2

FEMALE O-RING 90 DEG ELBOW INSERT

Part No.	Description
LIGHT SERIES	
4G6FDLORX90	FEM 24° O-RING L/SERIES 1/4 .H 6L 90°- 12X1.5
4G8FDLORX90	FEM 24° O-RING L/SERIES 1/4 .H 8L 90°- 14X1.5
4G10FDLORX90	FEM 24° O-RING L/SERIES 1/4 .H 10L 90°- 16X1.5
6G10FDLORX90	FEM 24° O-RING L/SERIES 3/8 .H 10L 90°- 16X1.5
6G12FDLORX90	FEM 24° O-RING L/SERIES 3/8 .H 12L 90°- 18X1.5
8G15FDLORX90	FEM 24° O-RING L/SERIES 1/2 .H 15L 90°- 22X1.5
12G18FDLORX90	FEM 24° O-RING L/SERIES 3/4 .H 18L 90°- 26X1.5
12G22FDLORX90	FEM 24° O-RING L/SERIES 3/4 .H 22L 90°- 30X2
16G28FDLORX90	FEM 24° O-RING L/SERIES 1 .H 28L 90°- 36X2
20G35FDLORX90	FEM 24° O-RING L/SERIES 1-1/4 .H 35L 90°- 45X2
HEAVY SERIES	
4G8FDHORX90	FEM 24° O-RING H/SERIES 1/4 .H 8S 90°- 16X1.5
4G10FDHORX90	FEM 24° O-RING H/SERIES 1/4 .H 10S 90°- 18X1.5
6G10FDHORX90	FEM 24° O-RING H/SERIES 3/8 .H 10S 90°- 18X1.5
6G12FDHORX90	FEM 24° O-RING H/SERIES 3/8 .H 12S 90°- 20X1.5
8G16FDHORX90	FEM 24° O-RING H/SERIES 1/2 .H 16S 90°- 24X1.5
12G20FDHORX90	FEM 24° O-RING H/SERIES 3/4 .H 20S 90°- 30X2
12G25FDHORX90	FEM 24° O-RING H/SERIES 3/4 .H 25S 90°- 36X2
16G30FDHORX90	FEM 24° O-RING H/SERIES 1 .H 30S 90°- 42X2
20G38FDHORX90	FEM 24° O-RING H/SERIES 1-1/4 .H 38S 90°- 52X2

MALE O-RING INSERT

Part No.	Description
LIGHT SERIES	
4G6MDL	MALE 24° O-RING L/SERIES 1/4 .H 6L 90°- 12X1.5
4G8MDL	MALE 24° O-RING L/SERIES 1/4 .H 8L 90°- 14X1.5
4G10MDL	MALE 24° O-RING L/SERIES 1/4 .H 10L 90°- 16X1.5
6G10MDL	MALE 24° O-RING L/SERIES 3/8 .H 10L 90°- 16X1.5
6G12MDL	MALE 24° O-RING L/SERIES 3/8 .H 12L 90°- 18X1.5
8G15MDL	MALE 24° O-RING L/SERIES 1/2 .H 15L 90°- 22X1.5
12G18MDL	MALE 24° O-RING L/SERIES 3/4 .H 18L 90°- 26X1.5
12G22MDL	MALE 24° O-RING L/SERIES 3/4 .H 22L 90°- 30X2
16G28MDL	MALE 24° O-RING L/SERIES 1 .H 28L 90°- 36X2
20G35MDL	MALE 24° O-RING L/SERIES 1-1/4 .H 35L 90°- 45X2
HEAVY SERIES	
4G8MDH	MALE 24° O-RING H/SERIES 1/4 .H 8S 90°- 16X1.5
4G10MDH	MALE 24° O-RING H/SERIES 1/4 .H 10S 90°- 18X1.5
6G10MDH	MALE 24° O-RING H/SERIES 3/8 .H 10S 90°- 18X1.5
6G12MDH	MALE 24° O-RING H/SERIES 3/8 .H 12S 90°- 20X1.5
8G16MDH	MALE 24° O-RING H/SERIES 1/2 .H 16S 90°- 24X1.5
12G20MDH	MALE 24° O-RING H/SERIES 3/4 .H 20S 90°- 30X2
12G25MDH	MALE 24° O-RING H/SERIES 3/4 .H 25S 90°- 36X2
16G30MDH	MALE 24° O-RING H/SERIES 1 .H 30S 90°- 42X2
20G38MDH	MALE 24° O-RING H/SERIES 1-1/4 .H 38S 90°- 52X2

GS SERIES (GLOBAL SPIRAL) INSERTS - BSP

60 DEG CONE - STRAIGHT FEMALE INSERT

Part No.	Description
6GS6BSPORX	FEM 60° CONE STR 3/8 .H 3/8 BSP O-RING
6GS8BSPORX	FEM 60° CONE STR 3/8 .H 1/2 BSP O-RING
8GS8BSPORX	FEM 60° CONE STR 1/2 .H 1/2 BSP O-RING
12GS12BSPORX	FEM 60° CONE STR 3/4 .H 3/4 BSP O-RING
12GS16BSPORX	FEM 60° CONE STR 3/4 .H 1 BSP O-RING
16GS16BSPORX	FEM 60° CONE STR 1 .H 1 BSP O-RING
20GS20BSPORX	FEM 60° CONE STR 1-1/4 .H 1-1/4 BSP O-RING

60 DEG CONE - STRAIGHT MALE INSERT

Part No.	Description
4GS4MBSPP	MALE 60° CONE STR 1/4 .H 1/4 BSP
6GS6MBSPP	MALE 60° CONE STR 3/8 .H 3/8 BSP
8GS8MBSPP	MALE 60° CONE STR 1/2 .H 1/2 BSP
12GS12MBSPP	MALE 60° CONE STR 3/4 .H 3/4 BSP
16GS16MBSPP	MALE 60° CONE STR 1 .H 1 BSP
20GS20MBSPP	MALE 60° CONE STR 1-1/4 .H 1-1/4 BSP

60 DEG CONE - 45 DEG ELBOW FEMALE INSERT

Part No.	Description
6GS6BSPORX45	FEM 60° CONE 45 ELBOW 3/8 .H 3/8 BSP O-RING
8GS8BSPORX45	FEM 60° CONE 45 ELBOW 1/2 .H 1/2 BSP O-RING
12GS12BSPORX45	FEM 60° CONE 45 ELBOW 3/4 .H 3/4 BSP O-RING
16GS16BSPORX45	FEM 60° CONE 45 ELBOW 1 .H 1 BSP O-RING
20GS20BSPORX45	FEM 60° CONE 45 ELBOW 1-1/4 .H 1-1/4 BSP O-RING

BANJO INSERT

Part No.	Description
4GS4BSPBJ	BANJO 1/4 .H 1/4 BSP
4GS6BSPBJ	BANJO 1/4 .H 3/8 BSP
6GS4BSPBJ	BANJO 3/8 .H 1/4 BSP
6GS6BSPBJ	BANJO 3/8 .H 3/8 BSP
6GS8BSPBJ	BANJO 3/8 .H 1/2 BSP
8GS8BSPBJ	BANJO 1/2 .H 1/2 BSP
12GS12BSPBJ	BANJO 3/4 .H 3/4 BSP

60 DEG CONE - 90 DEG ELBOW FEMALE INSERT

Part No.	Description
6GS6BSPORX90	FEM 60° CONE 90 ELBOW 3/8 .H 3/8 BSP O-RING
6GS8BSPORX90	FEM 60° CONE 90 ELBOW 3/8 .H 1/2 BSP O-RING
8GS8BSPORX90	FEM 60° CONE 90 ELBOW 1/2 .H 1/2 BSP O-RING
12GS12BSPORX90	FEM 60° CONE 90 ELBOW 3/4 .H 3/4 BSP O-RING
12GS16BSPORX90	FEM 60° CONE 90 ELBOW 3/4 .H 1 BSP O-RING
16GS16BSPORX90	FEM 60° CONE 90 ELBOW 1 .H 1 BSP O-RING
20GS20BSPORX90	FEM 60° CONE 90 ELBOW 1-1/4 .H 1-1/4 BSP O-RING

GS SERIES (GLOBAL SPIRAL) INSERTS - METRIC

GS STRAIGHT FEMALE METRIC

Part No.	Description
LIGHT SERIES	
6GS12FDLORX	FEM 24° O-RING L/SERIES 3/8 .H 12L STR 18X1.5
8GS15FDLORX	FEM 24° O-RING L/SERIES 1/2 .H 15L STR 22X1.5
12GS22FDLORX	FEM 24° O-RING L/SERIES 3/4 .H 22L STR 30X2
16GS28FDLORX	FEM 24° O-RING L/SERIES 1 .H 28L STR 36X2
20GS35FDLORX	FEM 24° O-RING L/SERIES 1-1/4 .H 35L STR 45X2
HEAVY SERIES	
8GS16FDHORX	FEM 24° O-RING H/SERIES 1/2 .H 16S STR 24X1.5
12GS20FDHORX	FEM 24° O-RING H/SERIES 3/4 .H 20S STR 30X2
12GS25FDHORX	FEM 24° O-RING H/SERIES 3/4 .H 25S STR 36X2
16GS25FDHORX	FEM 24° O-RING H/SERIES 1 .H 25S STR 36X3
16GS30FDHORX	FEM 24° O-RING H/SERIES 1 .H 30S STR 42X2
20GS38FDHORX	FEM 24° O-RING H/SERIES 1-1/4 .H 38S STR 52X2

GS MALE METRIC

Part No.	Description
LIGHT SERIES	
6GS12MDL	MALE 24° O-RING L/SERIES 3/8 .H 12L STR 18X1.5
8GS15MDL	MALE 24° O-RING L/SERIES 1/2 .H 15L STR 22X1.5
12GS22MDL	MALE 24° O-RING L/SERIES 3/4 .H 22L STR 30X2
16GS28MDL	MALE 24° O-RING L/SERIES 1 .H 28L STR 36X2
HEAVY SERIES	
8GS16MDH	MALE 24° O-RING H/SERIES 1/2 .H 16S STR 24X1.5
12GS20MDH	MALE 24° O-RING H/SERIES 3/4 .H 20S STR 30X2
12GS25MDH	MALE 24° O-RING H/SERIES 3/4 .H 25S STR 36X2
16GS25MDH	MALE 24° O-RING H/SERIES 1 .H 25S STR 36X2
16GS30MDH	MALE 24° O-RING H/SERIES 1 .H 30S STR 42X2
20GS38MDH	MALE 24° O-RING H/SERIES 1-1/4 .H 38S STR 52X2

GS 45 DEGREE FEMALE METRIC

Part No.	Description
LIGHT SERIES	
8GS15FDLORX45	FEM 24° O-RING L/SERIES 1/2 .H 15L 45° 22X1.5
12GS22FDLORX45	FEM 24° O-RING L/SERIES 3/4 .H 22L 45° 30X2
16GS28FDLORX45	FEM 24° O-RING L/SERIES 1 .H 28L 45° 36X2
HEAVY SERIES	
8GS16FDHORX45	FEM 24° O-RING H/SERIES 1/2 .H 16S 45° 24X1.5
12GS20FDHORX45	FEM 24° O-RING H/SERIES 3/4 .H 20S 45° 30X2
12GS25FDHORX45	FEM 24° O-RING H/SERIES 3/4 .H 25S 45° 36X2
16GS25FDHORX45	FEM 24° O-RING H/SERIES 1 .H 25S 45° 36X2
16GS30FDHORX45	FEM 24° O-RING H/SERIES 1 .H 30S 45° 42X2
20GS38FDHORX45	FEM 24° O-RING H/SERIES 1-1/4 .H 38S 45° 52X2

GS 90 DEGREE FEMALE METRIC

Part No.	Description
LIGHT SERIES	
6GS12FDLORX90	FEM 24° O-RING L/SERIES 3/8 .H 12L 90° 18X1.5
8GS15FDLORX90	FEM 24° O-RING L/SERIES 1/2 .H 15L 90° 22X1.5
12GS22FDLORX90	FEM 24° O-RING L/SERIES 3/4 .H 22L 90° 30X2
16GS28FDLORX90	FEM 24° O-RING L/SERIES 1 .H 28L 90° 36X2
20GS35FDLORX90	FEM 24° O-RING L/SERIES 1-1/4 .H 35L 90° 45X2
HEAVY SERIES	
8GS16FDHORX90	FEM 24° O-RING H/SERIES 1/2 .H 16S 90° 24X1.5
12GS20FDHORX90	FEM 24° O-RING H/SERIES 3/4 .H 20S 90° 30X2
12GS25FDHORX90	FEM 24° O-RING H/SERIES 3/4 .H 25S 90° 36X2
16GS25FDHORX90	FEM 24° O-RING H/SERIES 1 .H 25S 90° 36X2
16GS30FDHORX90	FEM 24° O-RING H/SERIES 1 .H 30S 90° 42X2
20GS38FDHORX90	FEM 24° O-RING H/SERIES 1-1/4 .H 38S 90° 52X2

GSP (GLOBALSPIRALPLUS) INSERTS - BSP

GSP - STRAIGHT FEMALE INSERT

Part No.	Description
24GSP24FBSPORX	FEM 60° CONE STR 1-1/2 .H 1-1/2 BSP O-RING
32GSP32FBSPORX	FEM 60° CONE STR 2 N91.H 2 BSP O-RING

GSP - 90 DEGREE ELBOW INSERT

Part No.	Description
24GSP24FBSPORX90	FEM 60° CONE 90 ELBOW 1-1/2 .H 1-1/2 BSP O-RING
32GSP32FBSPORX90	FEM 60° CONE 90 ELBOW 2 .H 2 BSP O-RING

GSP - 90 DEGREE ELBOW INSERT

Part No.	Description
24GSP24FBSPORX45	FEM 60° CONE 45 ELBOW 1-1/2 .H 1-1/2 BSP O-RING
32GSP32FBSPORX45	FEM 60° CONE 45 ELBOW 2 .H 2 BSP O-RING

GSP - STRAIGHT MALE INSERT

Part No.	Description
24GSP24MBSPP	FEM 60° CONE STR 1-1/2 .H 1-1/2 BSP O-RING
32GSP32MBSPP	FEM 60° CONE STR 2 .H 2 BSP O-RING

TEXTILE PROTECTION SLEEVE

Flexible, woven fabric covering designed to protect hoses and enhance their durability and longevity. Fits various hoses and can be easily installed or removed as needed.
Offers;

- Abrasion resistance – protect from friction and rubbing against surfaces which may cause wear and tear over time
- Thermal protection – provides the hose with insulation against extreme temperatures, both hot and cold.
- UV protection – prevents damage from UV rays in outdoor environments.

Ordering Chart

Part No.	Description
11.400.020	TEXTILE PROTECTION SLEEVE USMSHA-I.D- 20 MM
11.400.023	TEXTILE PROTECTION SLEEVE USMSHA-I.D-23 MM
11.400.033	TEXTILE PROTECTION SLEEVE USMSHA-I.D-33 MM
11.400.036	TEXTILE PROTECTION SLEEVE USMSHA-I.D-36 MM
11.400.040	TEXTILE PROTECTION SLEEVE USMSHA-I.D-40 MM
11.400.044	TEXTILE PROTECTION SLEEVE USMSHA-I.D-44 MM
11.400.047	TEXTILE PROTECTION SLEEVE USMSHA-I.D-47 MM

SPIRAL WRAP

Made from virgin grade HPE (high density polyethylene), spiral wrap is designed to increase the service life of hoses in harsh conditions.

Provides protection from abrasion and UV rays whilst offering flexibility for bends with its spiral design.

Ordering Chart

Part No.	Description
11.103.09-15	SPIRALWRAP BLACK-PE (HDPE)-RANGE 09-15 MM
11.103.14-20	SPIRALWRAP BLACK-PE (HDPE)-RANGE 14-20 MM
11.103.18-24	SPIRALWRAP BLACK-PE (HDPE)-RANGE 18-24 MM
11.103.22-30	SPIRALWRAP BLACK-PE (HDPE)-RANGE 22-30 MM
11.103.30-38	SPIRALWRAP BLACK-PE (HDPE)-RANGE 30-38 MM
11.103.36-45	SPIRALWRAP BLACK-PE (HDPE)-RANGE 36-45 MM
11.103.44-65	SPIRALWRAP BLACK-PE (HDPE)-RANGE 44-60 MM
11.103.58-70	SPIRALWRAP BLACK-PE (HDPE)-RANGE 58-70 MM
11.103.65-78	SPIRALWRAP BLACK-PE (HDPE)-RANGE 65-78 MM

All adaptors are manufactured from steel
BS EN102777: 3 : 1999 230MO7Pb
BE SEN10277: 3 : 1 1SMnPb37
European Standard and compatible with ISO 8484-6/BS5200
BSP Parallel Threads to BS ENIS0228-1:2003
BSP JIC Threads to BS 1580:2007
BSPT Threads to BS EN 10226-1:2004

STRAIGHT

BSP MALE X BSP MALE ADAPTOR

Part No.	Thread Size 1 (BSP)	Thread Size 2 (BSP)	Max. pressure (bar)
00001	1/8”	1/8”	350
00002	1/8”	1/4”	350
00003	1/8”	3/8”	350
00005	1/4”	1/4”	450
00006	1/4”	3/8”	380
00007	1/4”	1/2”	310
00014	3/8”	3/8”	380
00015	3/8”	1/2”	310
00021	1/2”	1/2”	310
00022	1/2”	5/8”	280
00023	1/2”	3/4”	240
00032	3/4”	3/4”	240
00033	3/4”	1”	210
00037	1”	1”	210
00038	1”	1.1/4”	170
00042	1.1/4”	1.1/4”	170

STRAIGHT

BSP MALE X JIC MALE ADAPTOR

Part No.	Thread Size 1 (BSP)	Thread Size 2 (JIC)	Max. pressure (bar)
01103	1/4”	7/16”	345
01105	1/4”	9/16”	345
01111	3/8”	9/16”	345
01119	1/2”	3/4”	310
01120	1/2”	7/8”	240
01113	3/4”	1.1/16”	240
01140	1”	1.5/16”	210

STRAIGHT

BSP MALE X BSPT MALE ADAPTOR

Part No.	Thread Size 1 (BSP)	Thread Size 2 (BSPT)	Max. pressure (bar)
00301	1/8”	1/8”	345
00302	1/8”	1/4”	275
00306	1/4”	1/4”	275
00311	3/8”	3/8”	380
00314	3/8”	1/2”	310
00320	1/2”	3/8”	310
00321	1/2”	1/2”	310
00332	3/4”	1/2”	240
00334	3/4”	3/4”	240
00335	3/4”	1”	210
00361	1”	3/8”	210
00338	1”	1/2”	210
00340	1”	1”	210

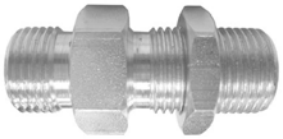

STRAIGHT

BSP MALE X BSP MALE BULKHEAD WITH LOCKNUT

Part No.	Thread Size 1 (BSP)	Thread Size 2 (BSP)	Max. pressure (bar)
09501	1/4”	1/4”	450
09502	3/8”	3/8”	380
09503	1/2”	1/2”	310
09506	3/4”	3/4”	240
09507	1”	1”	210

STRAIGHT

BSP FIXED FEMALE ADAPTOR

Part No.	Thread Size 1 (BSP)	Thread Size 2 (BSP)	Max. pressure (bar)
09002	1/4”	1/4”	450
09004	3/8”	3/8”	380
09005	1/2”	1/2”	310
09010	3/4”	3/4”	240
09011	1”	1”	170

FEMALES & SWIVELS
BSP SWIVEL FEMALE ADAPTER

Part No.	Thread Size 1 (BSP)	Thread Size 2 (BSP)	Max. pressure (bar)
01727	1/4”	1/4”	450
01729	3/8”	3/8”	380
01734	1/2”	1/2”	310
01738	5/8”	5/8”	280
01741	3/4”	3/4”	240
01743	1”	1”	210

FEMALES & SWIVELS
BSP SWIVEL MALE/FEMALE ADAPTER

Part No.	Thread Size 1 (BSP)	Thread Size 2 (BSP)	Max. pressure (bar)
01427	1/4”	1/4”	450
01429	1/4”	3/8”	380
01430	1/4”	1/2”	310
01435	3/8”	1/2”	310
01440	1/2”	1/2”	310
01442	1/2”	3/4”	240
01451	3/4”	3/4”	240
01453	3/4”	1”	210
01458	1”	1”	210
01463	1”	1.1/4”	170
01461	1.1/4”	1.1/4”	170

PLUGS
BSP MALE 60 DEG CONED PLUG

Part No.	Thread Size 1 (BSP)	Thread Size 2 (BSP)	Max. pressure (bar)
09050	1/8”	X	350
09051	1/4”	X	450
09052	3/8”	X	380
09053	1/2”	X	310
09055	3/4”	X	240
09056	1”	X	170

PLUGS
JIC PLUG

Part No.	Thread Size 1 (JIC)	Thread Size 2 (JIC)	Max. pressure (bar)
09121	7/16”	X	310
09123	9/16”	X	310
09124	3/4”	X	240
09126	1.1/16”	X	170
09130	1.5/16”	X	170

CAPS
BSP SWIVEL BLANKING CAP

Part No.	Thread Size 1 (BSP)	Thread Size 2 (BSP)	Max. pressure (bar)
09180	1/8”	X	350
09181	1/4”	X	450
09182	3/8”	X	380
09183	1/2”	X	310
09185	3/4”	X	240
09186	1”	X	210

CAPS
JIC SWIVEL BLANKING CAP

Part No.	Thread Size 1 (JIC)	Thread Size 2 (JIC)	Max. pressure (bar)
09199	3/8”	X	380
09200	7/16”	X	310
09201	1/2”	X	310
09202	9/16”	X	240
09203	3/4”	X	240
09204	7/8”	X	210
09205	1.1/16”	X	210
09206	1.3/16”	X	170
09207	1.5/16”	X	136
09208	1.7/8”	X	136

TEES
BSP MALE TEE FOR BONDED SEAL

Part No.	Thread Size 1 (BSP)	Thread Size 2 (BSP)	Max. pressure (bar)
01932	1/8”	1/8”	350
01925	1/4”	1/4”	450
01926	3/8”	3/8”	380
01927	1/2”	1/2”	310
01929	3/4”	3/4”	240
01930	1”	1”	210

ELBOWS
BSP FEMALE SWIVEL X BSP FEMALE SWIVEL 90 DEG COMPACT ELBOW

Part No.	Thread Size 1 (BSP)	Thread Size 2 (BSP)	Max. pressure (bar)
05026	1/4”	1/4”	450
05027	3/8”	3/8”	380
05028	1/2”	1/2”	310
05030	3/4”	3/4”	240
05031	1”	1”	210

TEES
BSP SWIVEL FEMALE TEE

Part No.	Thread Size 1 (BSP)	Thread Size 2 (BSP)	Max. pressure (bar)
01976	1/4”	1/4”	450
01977	3/8”	3/8”	380
01978	1/2”	1/2”	310
01980	3/4”	3/4”	240
01981	1”	1”	210

SEALS
BSP SELF CENTERING BONDED SEALS

Part No.	Thread Size 1 (BSP)	Thread Size 2 (BSP)	Max. pressure (bar)
PP45-B-SC	1/4”	X	450
PP45-C-SC	3/8”	X	380
PP45-D-SC	1/2”	X	310
PP45-F-SC	3/4”	X	240
PP45-H-SC	1”	X	210
PP45-J-SC	11/4”	X	170

ELBOWS
BSP MALE FOR BONDED SEAL X BSP FEMALE SWIVEL 90 DEG COMPACT ELBOW

Part No.	Thread Size 1 (BSP)	Thread Size 2 (BSP)	Max. pressure (bar)
04014	1/4”	1/4”	450
04015	3/8”	3/8”	380
04016	1/2”	1/2”	310
04017	3/4”	3/4”	240
04018	1”	1”	210

Hydraulic motors

OMP/ WP/ MP HYDRAULIC MOTORS	**175**
OMR/ WR /MR HYDRAULIC MOTORS	**176**
OMS/ WS/ MS HYDRAULIC MOTORS	**177**

Hydrastore
Hydraulic Systems & Components

OMP/ WP/ MP HYDRAULIC MOTORS

The OMP / WP / MP Hydraulic Motor series, with spool valve design, offers an economic solution for many hydraulic systems. Intended for light duty applications , the OMP / WP / MP series offers many advantages, such as compact size, good speed range, effective torque and low weight. The OMP / WP / MP series motors are used in many industry sectors.

Ordering Chart

Part No.	Description	Displace-ment (cc/ rev.)	Max. pressure (bar)	Continuous torque (Nm)	Max. flow (lpm)	Weight (kg.)
155-025-A63-12-BAAAA	25CC/REV WP MOTOR WITH 25MM SHAFT	25	100	35	40	6.3
155-032-A63-12-BAAAA	32CC/REV WP MOTOR WITH 25MM SHAFT	32	100	45	50	6.4
155-040-A63-12-BAAAA	40CC/REV WP MOTOR WITH 25MM SHAFT	40	100	65	60	6.5
155-050-A63-12-BAAAA	50CC/REV WP MOTOR WITH 25MM SHAFT	50	140	91	60	6.5
155-080-A63-12-BAAAA	78CC/REV WP MOTOR WITH 25MM SHAFT	78	160	164	60	6.6
155-100-A63-12-BAAAA	96CC/REV WP MOTOR WITH 25MM SHAFT	96	160	195	60	6.7
155-125-A63-12-BAAAA	125CC/REV WP MOTOR WITH 25MM SHAFT	125	160	258	60	6.8
155-160-A63-12-BAAAA	159CC/REV WP MOTOR WITH 25MM SHAFT	159	160	321	60	6.9
155-200-A63-12-BAAAA	190CC/REV WP MOTOR WITH 25MM SHAFT	190	150	380	60	7.1
155-250-A63-12-BAAAA	240CC/REV WP MOTOR WITH 25MM SHAFT	240	140	445	60	7.3
155-315-A63-12-BAAAA	303CC/REV WP MOTOR WITH 25MM SHAFT	303	120	460	60	7.6
155-400-A63-12-BAAAA	388CC/REV WP MOTOR WITH 25MM SHAFT	388	95	488	60	7.9

HOUSINGS

► Dimensions shown are without paint. Paint thickness can be up to 0.13 [.005].

2-HOLE, SAE A MOUNT, OFFSET MANIFOLD PORTS A13 G 1/2 A63 G 1/2 (TP)

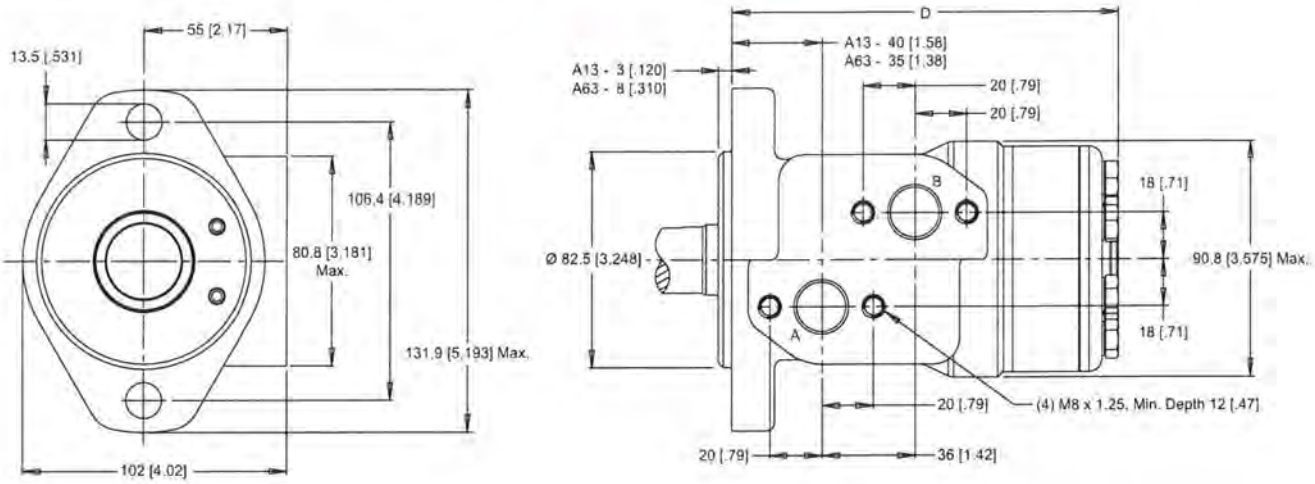

12 25mm Straight

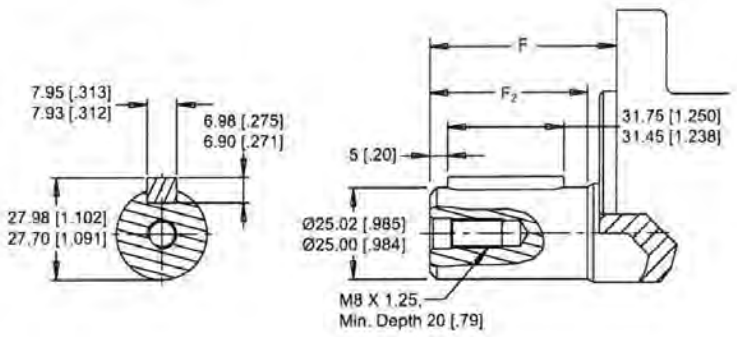

Displacement (cc/rev)	Length (mm)
25	128
32	129
40	131
50	131
80	137
100	141
125	145
160	150
200	157
250	165
315	176
400	181

OMR/ WR /MR HYDRAULIC MOTORS

The OMR / WR / MR Series motor incorporates the latest advances for smooth performance, efficiency and durability. It features an optimised Roller Stator geometry, to reduce sliding friction and provide rolling contact between the rotor and stator, increasing motor efficiency. The design and provision for a case drain reduces pressure on the internal seals improving product life.

Ordering Chart

Part No.	Description	Displacement (cc/rev.)	Max. pressure (bar)	Continuous torque (Nm)	Max. flow (lpm)	Weight (kg.)
255-040-A63-12-BAAAA	40CC/REV WR MOTOR WITH 25MM SHAFT	40	155	93	45	6.6
255-050-A63-12-BAAAA	50CC/REV WR MOTOR WITH 25MM SHAFT	50	155	111	53	6.6
255-060-A63-12-BAAAA	59CC/REV WR MOTOR WITH 25MM SHAFT	59	155	138	53	6.7
255-070-A63-12-BAAAA	71CC/REV WR MOTOR WITH 25MM SHAFT	71	172	176	61	6.7
255-080-A63-12-BAAAA	79CC/REV WR MOTOR WITH 25MM SHAFT	79	172	202	61	6.8
255-090-A63-12-BAAAA	88CC/REV WR MOTOR WITH 25MM SHAFT	88	172	222	61	6.8
255-100-A63-12-BAAAA	100CC/REV WR MOTOR WITH 25MM SHAFT	100	172	246	61	6.9
255-115-A63-12-BAAAA	113CC/REV WR MOTOR WITH 25MM SHAFT	113	172	284	61	7.1
255-130-A63-12-BAAAA	129CC/REV WR MOTOR WITH 25MM SHAFT	129	172	316	61	7.3
255-160-A63-12-BAAAA	160CC/REV WR MOTOR WITH 25MM SHAFT	160	172	400	61	7.5
255-200-A63-12-BAAAA	198CC/REV WR MOTOR WITH 25MM SHAFT	198	172	462	61	8.0
255-240-A63-12-BAAAA	236CC/REV WR MOTOR WITH 25MM SHAFT	236	172	548	61	8.5
255-320-A63-12-BAAAA	322CC/REV WR MOTOR WITH 25MM SHAFT	322	121	518	61	9.0
255-400-A63-12-BAAAA	400CC/REV WR MOTOR WITH 25MM SHAFT	400	104	551	61	9.8

HOUSINGS

2-HOLE, SAE A MOUNT, OFFSET MANIFOLD PORTS

A63 G 1/2 (TP)

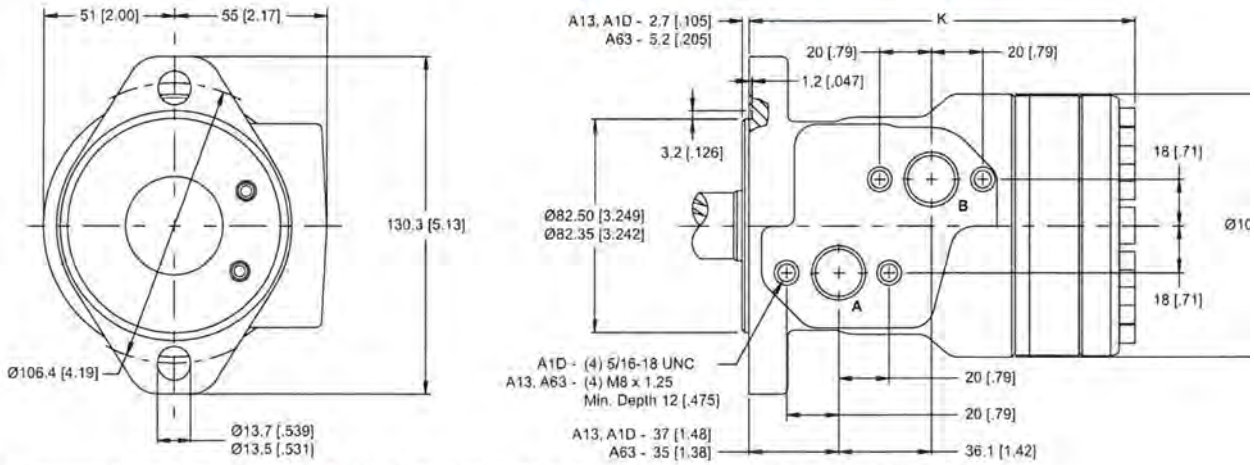

► Dimension K is charted on page 84. ► (TP) - Taller Pilot Height. Refer to detailed drawing for dimensional differences.

12 25mm Straight

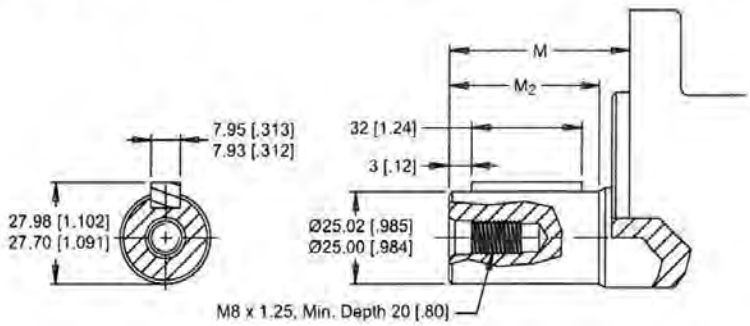

Displacement (cc/rev)	Length (mm)
40	142
50	144
70	147
80	150
90	151
100	154
115	156
130	160
160	166
200	173
240	182
320	198
400	213

Hydrastore
Hydraulic Systems & Components

OMS/ WS/ MS HYDRAULIC MOTORS

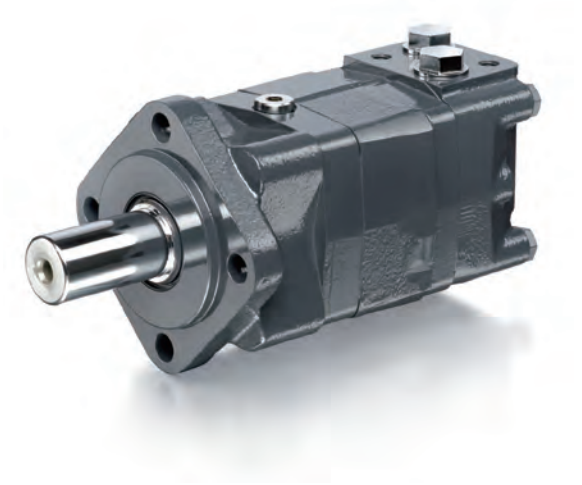

The OMS / WS / MS targets applications that require greater torque that the less robust version of motor cannot provide. A distinguishing feature of the OMS / WS / MS in relation to competitive products is its heavy duty drive link and larger pitch diameter, enabling the OMS / WS / MS to better withstand pressure and torque spikes as reflected in intermittent and peak performance ratings. Additional product features include a multi zone commutator valve, heavy-duty tapered roller bearings, and case drain.

Ordering Chart

Part No.	Description	Displacement (cc/rev.)	Max. pressure (bar)	Continuous torque (Nm)	Max. flow (lpm)	Weight (kg.)
360-080-AH3-21-BAAAA	80CC/REV WS MOTOR WITH 32MM SHAFT	80	210	234	65	10.2
360-100-AH3-21-BAAAA	100CC/REV WS MOTOR WITH 32MM SHAFT	100	210	301	75	10.5
360-125-AH3-21-BAAAA	125CC/REV WS MOTOR WITH 32MM SHAFT	125	210	364	75	10.5
360-160-AH3-21-BAAAA	160CC/REV WS MOTOR WITH 32MM SHAFT	160	210	466	75	11
360-200-AH3-21-BAAAA	200CC/REV WS MOTOR WITH 32MM SHAFT	200	210	599	75	11.4
360-230-AH3-21-BAAAA	226CC/REV WS MOTOR WITH 32MM SHAFT	226	200	652	75	12.2
360-250-AH3-21-BAAAA	250CC/REV WS MOTOR WITH 32MM SHAFT	250	200	703	75	11.9
360-315-AH3-21-BAAAA	305CC/REV WS MOTOR WITH 32MM SHAFT	305	200	872	75	12.4
360-400-AH3-21-BAAAA	393CC/REV WS MOTOR WITH 32MM SHAFT	393	160	910	75	13.3

4-HOLE, SAE A MOUNT

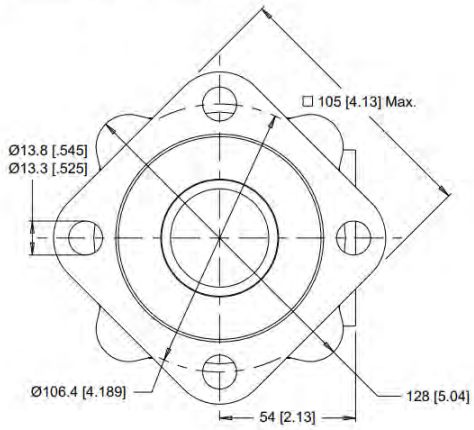

AH Side Ports

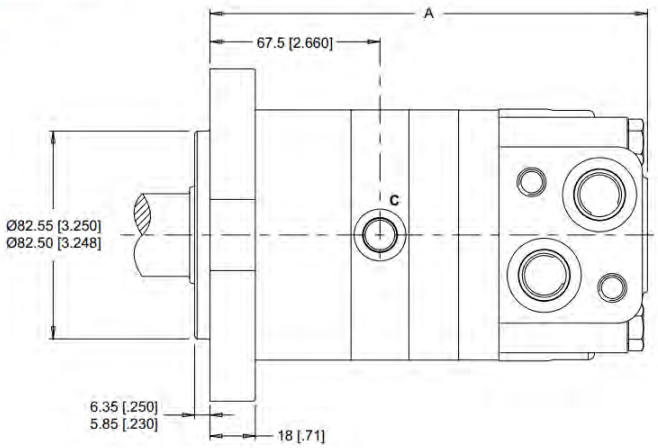

32mm Straight

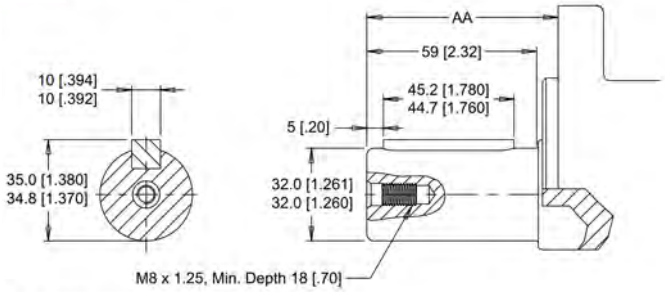

Max. Torque: 881 Nm [7800 lb-in]

Displacement (cc/rev)	Length (mm)
80	170
100	174
125	174
160	180
200	186
230	200
250	193
315	203
400	218

Hydraulic Powerpacks

INDUSTRIAL HYDRAULIC POWER UNITS 180
INDUSTRIAL HYDRAULIC POWERPACKS - ORDERING CHARTS 182
DC HYDRAULIC POWER UNITS - MICRO 90 186
DC HYDRAULIC POWER UNITS - MINI 130 187

INDUSTRIAL HYDRAULIC POWER UNITS

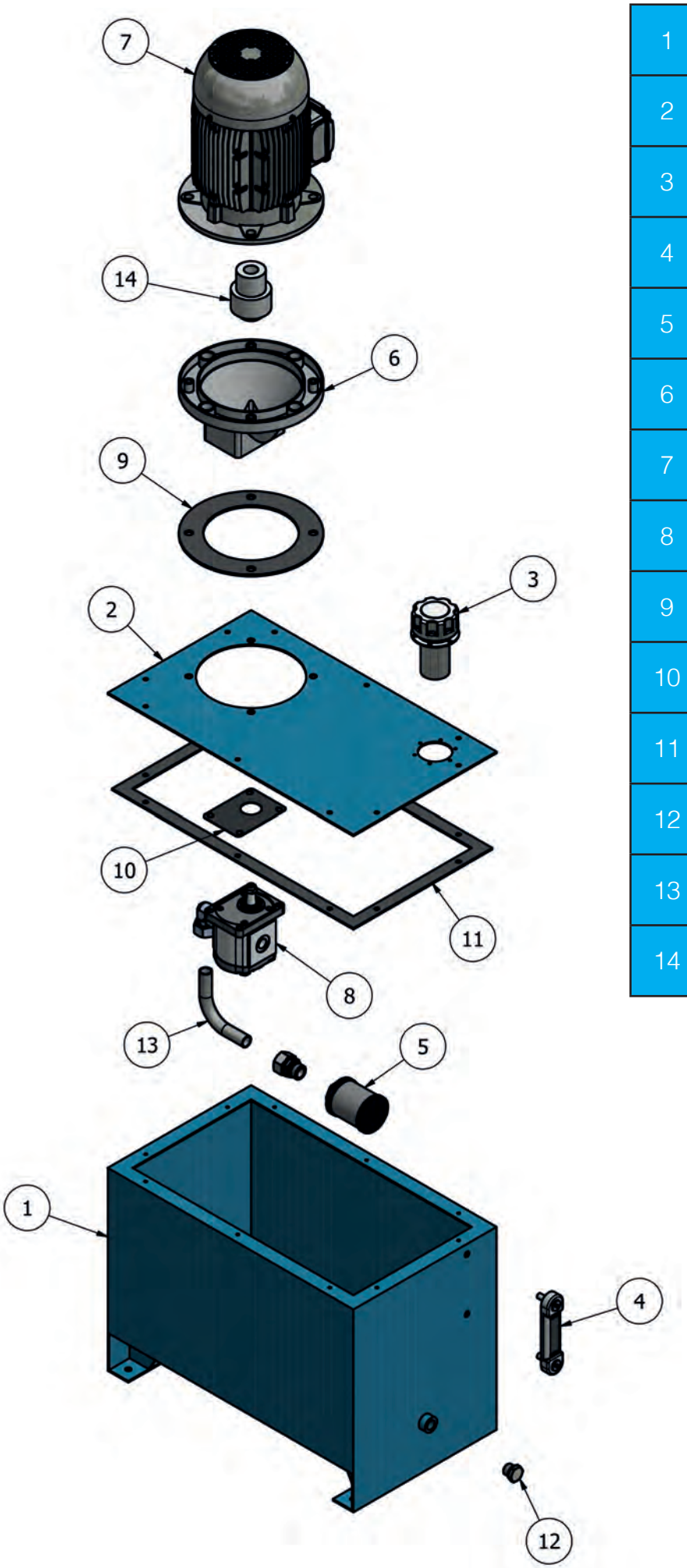

1	TANK
2	TANK LID
3	FILLER/BREATHER CAP
4	OIL LEVEL GAUGE
5	SUCTION STRAINER
6	BELL HOUSING
7	ELECTRIC MOTOR
8	GEAR PUMP
9	BELL HOUSING GASKET
10	GEAR PUMP GASKET
11	TANK GASKET
12	1/2” BSP DRAIN PLUG
13	SUCTION FILTER PIPE
14	DRIVE COUPLING

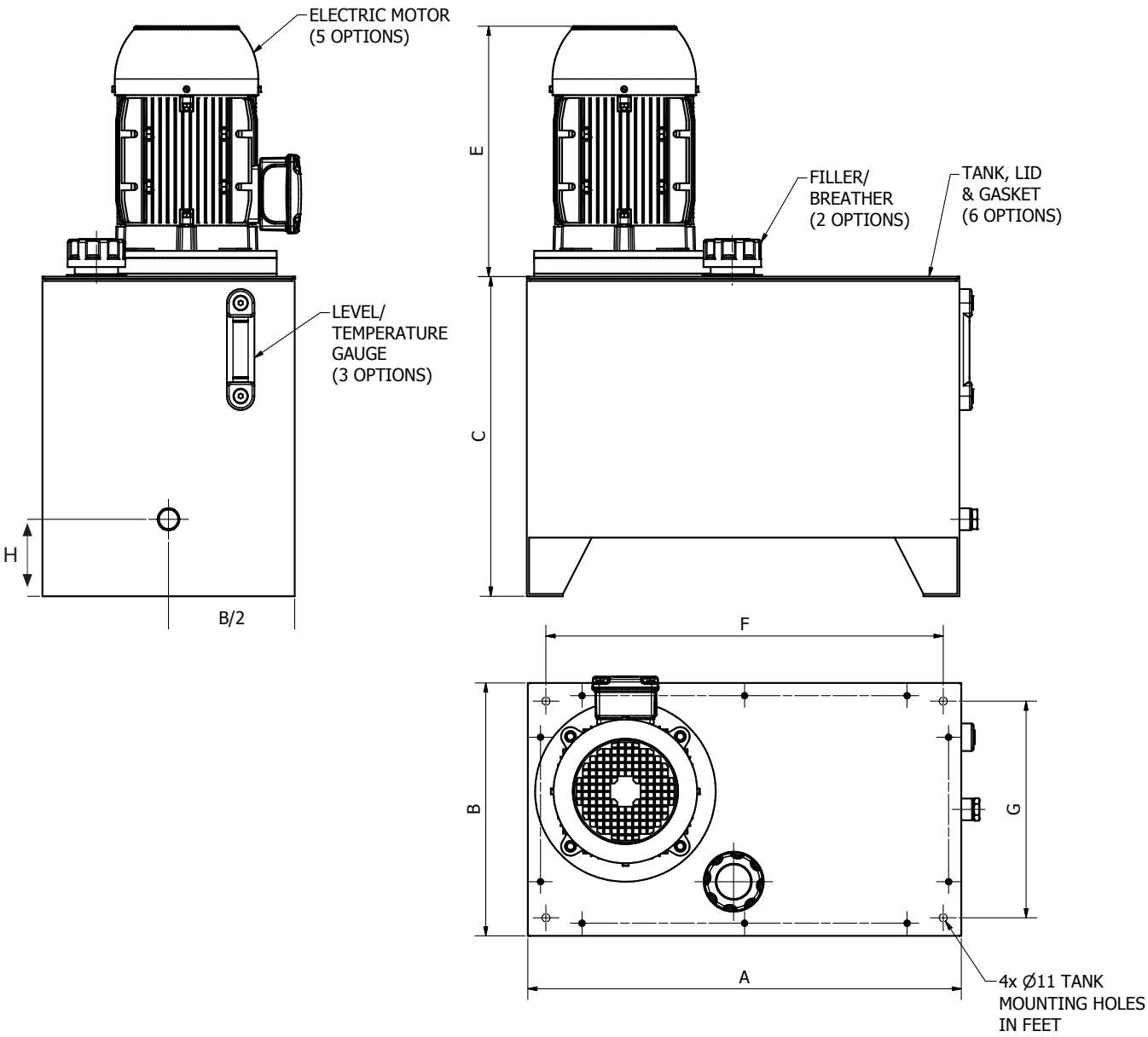

SIZE	MOTOR	FILLER	LEVEL	TANK WIDTH (A)	TANK DEPTH (B)	TANK HEIGHT (C)	MOTOR HEIGHT (E)	MOUNTING HOLES X DISTANCE (F)	MOUNTING HOLES Y DISTANCE (G)	DRAIN HOLE HEIGHT (H)
10L	D80/90	TA46	LVA10	320	240	256	240	270	190	75
25L	D80/90	TA46	LVA10	450	300	300	240	400	250	75
25L	D100/112	TA46	LVA10	450	300	300	349	400	250	75
50L	D80/90	TA80	LVA20	600	350	430	240	550	300	105
50L	D100/112	TA80	LVA20	600	350	430	349	550	300	105
100L	D100/112	TA80	LVA20	600	500	500	349	550	450	105
100L	D132	TA80	LVA20	600	500	500	410	550	450	105
100L	D160	TA80	LVA20	600	500	500	630	550	450	105
150L	D132	TA80	LVA30	800	550	500	410	750	500	105
150L	D160/180	TA80	LVA30	800	550	500	630	750	500	105
200L	D132	TA80	LVA30	825	600	600	410	775	550	105
200L	D160/180	TA80	LVA30	825	600	600	630	775	550	105

NOTES

1. All motor pump sets come with mounting holes, lid to tank sealing gasket, Suitable sized filler/breather & level/temperature gauge.
2. Tank size is based on nominal capacity to top of the level gauge.
3. Electric motors & suitable pumps, suction filter, pressure filter, return filter, relief valve, temperature switch, cooler, valves, hand pumps etc. can be added from the component parts within this catalogue. Speak to one of the sales team for guidance.
4. Tank height includes lid & gaskets thickness, motor height includes gasket & bell housing flange thickness.

INDUSTRIAL HYDRAULIC POWERPACKS ORDERING CHART

Hydrastore
Hydraulic Systems & Components

Part No.	Max. flow (lpm)	Max. pressure (bar)	Power (kW)	Frame size	Reservoir (litres)	Bell housing part no.
HE01-010	1.6	186	0.55	80	10	LMC201MFS100
HE01-025	1.6	186	0.55	80	25	LMC201MFS100
HE02-010	2.3	128	0.55	80	10	LMC201MFS100
HE02-025	2.3	128	0.55	80	25	LMC201MFS100
HE03-010	3	98	0.55	80	10	LMC201MFS100
HE03-025	3	98	0.55	80	25	LMC201MFS100
HE04-010	3.8	79	0.55	80	10	LMC201MFS100
HE04-025	3.8	79	0.55	80	25	LMC201MFS100
HE05-010	1.6	253	0.75	80	10	LMC201MFS100
HE05-025	1.6	253	0.75	80	25	LMC201MFS100
HE06-010	2.3	175	0.75	80	10	LMC201MFS100
HE06-025	2.3	175	0.75	80	25	LMC201MFS100
HE07-010	3	133	0.75	80	10	LMC201MFS100
HE07-025	3	133	0.75	80	25	LMC201MFS100
HE08-010	3.8	107	0.75	80	10	LMC201MFS100
HE08-025	3.8	107	0.75	80	25	LMC201MFS100
HE09-010	4.6	87	0.75	80	10	LMC201MFS100
HE09-025	4.6	87	0.75	80	25	LMC201MFS100
HE10-010	2.3	258	1.1	90	10	LMC201MFS100
HE10-025	2.3	258	1.1	90	25	LMC201MFS100
HE11-010	3	198	1.1	90	10	LMC201MFS100
HE11-025	3	198	1.1	90	25	LMC201MFS100
HE12-010	3.8	156	1.1	90	10	LMC201MFS100
HE12-025	3.8	156	1.1	90	25	LMC201MFS100
HE13-010	4.6	129	1.1	90	10	LMC201MFS100
HE13-025	4.6	129	1.1	90	25	LMC201MFS100
HE14-025	6	99	1.1	90	25	LMC201MFS100
HE15-025	7	85	1.1	90	25	LMC201MFS100
HE16-010	3.8	213	1.5	90	10	LMC201MFS100
HE16-025	3.8	213	1.5	90	25	LMC201MFS100
HE17-010	4.6	176	1.5	90	10	LMC201MFS100
HE17-025	4.6	176	1.5	90	25	LMC201MFS100
HE18-025	6	135	1.5	90	25	LMC201MFS100
HE19-025	7	116	1.5	90	25	LMC201MFS100
HE20-025	8	101	1.5	90	25	LMC201MFS100
HE21-025	9	90	1.5	90	25	LMC201MFS100
HE22-050	6	198	2.2	100	50	LMC250MFS100
HE23-050	9	132	2.2	100	50	LMC250MFS100
HE24-050	11	108	2.2	100	50	LMC250MFS200
HE25-050	16	74	2.2	100	50	LMC250MFS200
HE26-050	6	240	3	100	50	LMC250MFS200
HE26-100	6	240	3	100	100	LMC250MFS200
HE27-050	9	180	3	100	50	LMC250MFS200
HE27-100	9	180	3	100	100	LMC250MFS200
HE28-050	11	147	3	100	50	LMC250MFS200
HE28-100	11	147	3	100	100	LMC250MFS200
HE29-050	16	101	3	100	50	LMC250MFS200
HE29-100	16	101	3	100	100	LMC250MFS200
HE30-050	20	81	3	100	50	LMC250MFS200
HE30-100	20	81	3	100	100	LMC250MFS200
HE31-050	25	65	3	100	50	LMC250MFS200
HE31-100	25	65	3	100	100	LMC250MFS200
HE32-050	9	240	4	112	50	LMC250MFS200
HE33-050	11	196	4	112	50	LMC250MFS200
HE34-050	16	135	4	112	50	LMC250MFS200
HE34-100	16	135	4	112	100	LMC250MFS200
HE35-050	20	108	4	112	50	LMC250MFS200
HE35-100	20	108	4	112	100	LMC250MFS200
HE36-050	25	86	4	112	50	LMC250MFS200
HE36-100	25	86	4	112	100	LMC250MFS200
HE37-050	29	74	4	112	50	LMC250MFS200
HE37-100	29	74	4	112	100	LMC250MFS200
HE38-100	16	186	5.5	132	100	LMC300MFS2004S
HE38-150	16	186	5.5	132	150	LMC300MFS2004S

Coupling part no.	Suction Strainer part no.	Bell housing gasket part no.	Pump gasket part no.	Pump part no.
AKG04FS100	FSS-10-A-W125-00-N	BHG-200	PG-01PM	01ZAG011C401TD
AKG04FS100	FSS-10-A-W125-00-N	BHG-200	PG-01PM	01ZAG011C401TD
AKG04FS100	FSS-10-A-W125-00-N	BHG-200	PG-01PM	01ZAG016C401TD
AKG04FS100	FSS-10-A-W125-00-N	BHG-200	PG-01PM	01ZAG016C401TD
AKG04FS100	FSS-10-A-W125-00-N	BHG-200	PG-01PM	01ZAG021C401TD
AKG04FS100	FSS-10-A-W125-00-N	BHG-200	PG-01PM	01ZAG021C401TD
AKG04FS100	FSS-10-A-W125-00-N	BHG-200	PG-01PM	01ZAG026C401TD
AKG04FS100	FSS-10-A-W125-00-N	BHG-200	PG-01PM	01ZAG026C401TD
AKG04FS100	FSS-10-A-W125-00-N	BHG-200	PG-01PM	01ZAG011C401TD
AKG04FS100	FSS-10-A-W125-00-N	BHG-200	PG-01PM	01ZAG011C401TD
AKG04FS100	FSS-10-A-W125-00-N	BHG-200	PG-01PM	01ZAG016C401TD
AKG04FS100	FSS-10-A-W125-00-N	BHG-200	PG-01PM	01ZAG016C401TD
AKG04FS100	FSS-10-A-W125-00-N	BHG-200	PG-01PM	01ZAG021C401TD
AKG04FS100	FSS-10-A-W125-00-N	BHG-200	PG-01PM	01ZAG021C401TD
AKG04FS100	FSS-10-A-W125-00-N	BHG-200	PG-01PM	01ZAG026C401TD
AKG04FS100	FSS-10-A-W125-00-N	BHG-200	PG-01PM	01ZAG026C401TD
AKG04FS100	FSS-10-A-W125-00-N	BHG-200	PG-01PM	01ZAG032C401TD
AKG04FS100	FSS-10-A-W125-00-N	BHG-200	PG-01PM	01ZAG032C401TD
AKG05FS100	FSS-10-A-W125-00-N	BHG-200	PG-01PM	01ZAG011C401TD
AKG05FS100	FSS-10-A-W125-00-N	BHG-200	PG-01PM	01ZAG011C401TD
AKG05FS100	FSS-10-A-W125-00-N	BHG-200	PG-01PM	01ZAG016C401TD
AKG05FS100	FSS-10-A-W125-00-N	BHG-200	PG-01PM	01ZAG016C401TD
AKG05FS100	FSS-10-A-W125-00-N	BHG-200	PG-01PM	01ZAG021C401TD
AKG05FS100	FSS-10-A-W125-00-N	BHG-200	PG-01PM	01ZAG021C401TD
AKG05FS100	FSS-10-A-W125-00-N	BHG-200	PG-01PM	01ZAG026C401TD
AKG05FS100	FSS-10-A-W125-00-N	BHG-200	PG-01PM	01ZAG026C401TD
AKG05FS100	FSS-10-A-W125-00-N	BHG-200	PG-01PM	01ZAG032C401TD
AKG05FS100	FSS-10-A-W125-00-N	BHG-200	PG-01PM	01ZAG042C401TD
AKG05FS100	FSS-10-A-W125-00-N	BHG-200	PG-01PM	01ZAG021C401TD
AKG05FS100	FSS-10-A-W125-00-N	BHG-200	PG-01PM	01ZAG021C401TD
AKG05FS100	FSS-10-A-W125-00-N	BHG-200	PG-01PM	01ZAG026C401TD
AKG05FS100	FSS-10-A-W125-00-N	BHG-200	PG-01PM	01ZAG026C401TD
AKG05FS100	FSS-10-A-W125-00-N	BHG-200	PG-01PM	01ZAG032C401TD
AKG05FS100	FSS-10-A-W125-00-N	BHG-200	PG-01PM	01ZAG042C401TD
AKG05FS100	FSS-10-A-W125-00-N	BHG-200	PG-01PM	01ZAG055C401TD
AKG05FS100	FSS-10-A-W125-00-N	BHG-200	PG-01PM	01ZAG062C401TD
AKG07FS100	FSS-10-A-W125-00-N	BHG-250	PG-01PM	01ZAG032C401TD
AKG07FS100	FSS-10-A-W125-00-N	BHG-250	PG-01PM	01ZAG042C401TD
AKG07FS200	FSS-10-A-W125-00-N	BHG-250	PG-02M	02ZAG08C034DN
AKG07FS200	FSS-10-A-W125-00-N	BHG-250	PG-02M	02ZAG11C034DN
AKG07FS200	FSS-10-A-W125-00-N	BHG-250	PG-02M	02ZAG04C034DN
AKG07FS200	FSS-10-A-W125-00-N	BHG-250	PG-02M	02ZAG04C034DN
AKG07FS200	FSS-10-A-W125-00-N	BHG-250	PG-02M	02ZAG06C034DN
AKG07FS200	FSS-10-A-W125-00-N	BHG-250	PG-02M	02ZAG06C034DN
AKG07FS200	FSS-10-A-W125-00-N	BHG-250	PG-02M	02ZAG08C034DN
AKG07FS200	FSS-20-A-W125-01-N	BHG-250	PG-02M	02ZAG08C034DN
AKG07FS200	FSS-10-A-W125-00-N	BHG-250	PG-02M	02ZAG11C034DN
AKG07FS200	FSS-10-A-W125-00-N	BHG-250	PG-02M	02ZAG11C034DN
AKG07FS200	FSS-20-A-W125-01-N	BHG-250	PG-02M	02ZAG14C035DN
AKG07FS200	FSS-20-A-W125-01-N	BHG-250	PG-02M	02ZAG14C035DN
AKG07FS200	FSS-20-A-W125-01-N	BHG-250	PG-02M	02ZAG17C035DN
AKG07FS200	FSS-20-A-W125-01-N	BHG-250	PG-02M	02ZAG17C035DN
AKG07FS200	FSS-10-A-W125-00-N	BHG-250	PG-02M	02ZAG06C034DN
AKG07FS200	FSS-10-A-W125-00-N	BHG-250	PG-02M	02ZAG08C034DN
AKG07FS200	FSS-10-A-W125-00-N	BHG-250	PG-02M	02ZAG11C034DN
AKG07FS200	FSS-10-A-W125-00-N	BHG-250	PG-02M	02ZAG11C034DN
AKG07FS200	FSS-20-A-W125-01-N	BHG-250	PG-02M	02ZAG14C035DN
AKG07FS200	FSS-20-A-W125-01-N	BHG-250	PG-02M	02ZAG14C035DN
AKG07FS200	FSS-20-A-W125-01-N	BHG-250	PG-02M	02ZAG17C035DN
AKG07FS200	FSS-20-A-W125-01-N	BHG-250	PG-02M	02ZAG17C035DN
AKG07FS200	FSS-20-B-W125-02-N	BHG-250	PG-02M	02ZAG20C035DN
AKG07FS200	FSS-20-B-W125-02-N	BHG-250	PG-02M	02ZAG20C035DN
AKG11FS200	FSS-10-A-W125-00-N	BHG-300	PG-02M	02ZAG11C034DN
AKG11FS200	FSS-10-A-W125-00-N	BHG-300	PG-02M	02ZAG11C034DN

INDUSTRIAL HYDRAULIC POWERPACKS ORDERING CHART

Part No.	Max. flow (lpm)	Max. pressure (bar)	Power (kW)	Frame size	Reservoir (litres)	Bell housing part no.
HE39-100	20	149	5.5	132	100	LMC300MFS2004S
HE39-150	20	149	5.5	132	150	LMC300MFS2004S
HE40-100	25	119	5.5	132	100	LMC300MFS2004S
HE40-150	25	119	5.5	132	150	LMC300MFS2004S
HE41-100	29	102	5.5	132	100	LMC300MFS2004S
HE41-150	29	102	5.5	132	150	LMC300MFS2004S
HE42-100	36	83	5.5	132	100	LMC300MFS2004S
HE42-150	36	83	5.5	132	150	LMC300MFS2004S
HE43-100	16	253	7.5	132	100	LMC300MFS2004S
HE43-150	16	253	7.5	132	150	LMC300MFS2004S
HE44-100	20	203	7.5	132	100	LMC300MFS2004S
HE44-150	20	203	7.5	132	150	LMC300MFS2004S
HE45-100	25	162	7.5	132	100	LMC300MFS2004S
HE45-150	25	162	7.5	132	150	LMC300MFS2004S
HE46-100	29	140	7.5	132	100	LMC300MFS2004S
HE46-150	29	140	7.5	132	150	LMC300MFS2004S
HE47-100	36	113	7.5	132	100	LMC300MFS2004S
HE47-150	36	113	7.5	132	150	LMC300MFS2004S
HE47-200	36	113	7.5	132	200	LMC300MFS2004S
HE48-150	45	90	7.5	132	150	LMC300MFS2004S
HE48-200	45	90	7.5	132	200	LMC300MFS2004S
HE49-100	25	238	11	160	100	LMC300MFS2004S
HE49-150	25	238	11	160	150	LMC300MFS2004S
HE50-100	36	165	11	160	100	LMC351MFS3004S
HE50-150	36	165	11	160	150	LMC351MFS3004S
HE51-150	44	135	11	160	150	LMC351MFS3004S
HE52-150	51	116	11	160	150	LMC351MFS3004S
HE52-200	51	116	11	160	200	LMC351MFS3004S
HE53-150	58	102	11	160	150	LMC351MFS3004S
HE53-200	58	102	11	160	200	LMC351MFS3004S
HE54-150	65	91	11	160	150	LMC351MFS3004S
HE54-200	65	91	11	160	200	LMC351MFS3004S
HE55-150	36	225	15	160	150	LMC351MFS3004S
HE56-150	44	184	15	160	150	LMC351MFS3004S
HE57-150	51	159	15	160	150	LMC351MFS3004S
HE58-150	58	140	15	160	150	LMC351MFS3004S
HE58-200	58	140	15	160	200	LMC351MFS3004S
HE59-150	65	125	15	160	150	LMC351MFS3004S
HE59-200	65	125	15	160	200	LMC351MFS3004S
HE60-150	73	111	15	160	150	LMC351MFS3004S
HE60-200	73	111	15	160	200	LMC351MFS3004S
HE61-200	87	93	15	160	200	LMC351MFS3004S
HE62-200	94	86	15	160	200	LMC351MFS3004S
HE63-150	44	227	18.5	180	150	LMC351MFS3004S
HE64-150	51	196	18.5	180	150	LMC351MFS3004S
HE65-150	58	172	18.5	180	150	LMC351MFS3004S
HE65-200	58	172	18.5	180	200	LMC351MFS3004S
HE66-150	65	154	18.5	180	150	LMC351MFS3004S
HE66-200	65	154	18.5	180	200	LMC351MFS3004S
HE67-150	73	137	18.5	180	150	LMC351MFS3004S
HE67-200	73	137	18.5	180	200	LMC351MFS3004S
HE68-200	87	115	18.5	180	200	LMC351MFS3004S
HE69-200	94	106	18.5	180	200	LMC351MFS3004S
HE70-200	102	98	18.5	180	200	LMC351MFS3004S
HE71-150	58	205	22	180	150	LMC351MFS3004S
HE71-200	58	205	22	180	200	LMC351MFS3004S
HE72-150	65	183	22	180	150	LMC351MFS3004S
HE72-200	65	183	22	180	200	LMC351MFS3004S
HE73-150	73	163	22	180	150	LMC351MFS3004S
HE73-200	73	163	22	180	200	LMC351MFS3004S
HE74-200	87	137	22	180	200	LMC351MFS3004S
HE75-200	94	126	22	180	200	LMC351MFS3004S
HE76-200	102	116	22	180	200	LMC351MFS3004S

Coupling part no.	Suction Strainer part no.	Bell housing gasket part no.	Pump gasket part no.	Pump part no.
AKG11FS200	FSS-20-A-W125-01-N	BHG-300	PG-02M	02ZAG14C035DN
AKG11FS200	FSS-20-A-W125-01-N	BHG-300	PG-02M	02ZAG14C035DN
AKG11FS200	FSS-20-A-W125-01-N	BHG-300	PG-02M	02ZAG17C035DN
AKG11FS200	FSS-20-A-W125-01-N	BHG-300	PG-02M	02ZAG17C035DN
AKG11FS200	FSS-20-B-W125-02-N	BHG-300	PG-02M	02ZAG20C035DN
AKG11FS200	FSS-20-B-W125-02-N	BHG-300	PG-02M	02ZAG20C035DN
AKG11FS200	FSS-20-B-W125-02-N	BHG-300	PG-02M	02ZAG25C035DN
AKG11FS200	FSS-20-B-W125-02-N	BHG-300	PG-02M	02ZAG25C035DN
AKG11FS200	FSS-10-A-W125-00-N	BHG-300	PG-02M	02ZAG11C034DN
AKG11FS200	FSS-10-A-W125-00-N	BHG-300	PG-02M	02ZAG11C034DN
AKG11FS200	FSS-20-A-W125-01-N	BHG-300	PG-02M	02ZAG14C035DN
AKG11FS200	FSS-20-A-W125-01-N	BHG-300	PG-02M	02ZAG14C035DN
AKG11FS200	FSS-20-A-W125-01-N	BHG-300	PG-02M	02ZAG17C035DN
AKG11FS200	FSS-20-A-W125-01-N	BHG-300	PG-02M	02ZAG17C035DN
AKG11FS200	FSS-20-B-W125-02-N	BHG-300	PG-02M	02ZAG20C035DN
AKG11FS200	FSS-20-B-W125-02-N	BHG-300	PG-02M	02ZAG20C035DN
AKG11FS200	FSS-20-B-W125-02-N	BHG-300	PG-02M	02ZAG25C035DN
AKG11FS200	FSS-20-B-W125-02-N	BHG-300	PG-02M	02ZAG25C035DN
AKG11FS200	FSS-20-B-W125-02-N	BHG-300	PG-02M	02ZAG25C035DN
AKG11FS200	FSS-20-B-W125-02-N	BHG-300	PG-02M	02ZAG31C035DN
AKG11FS200	FSS-20-B-W125-02-N	BHG-300	PG-02M	02ZAG31C035DN
AKG11FS200	FSS-20-A-W125-01-N	BHG-300	PG-02M	02ZAG17C035DN
AKG11FS200	FSS-20-A-W125-01-N	BHG-300	PG-02M	02ZAG17C035DN
AKG12FS300	FSS-20-B-W125-02-N	BHG-350	PG-03M	03ZAG25C064DN
AKG12FS300	FSS-20-B-W125-02-N	BHG-350	PG-03M	03ZAG25C064DN
AKG12FS300	FSS-20-B-W125-02-N	BHG-350	PG-03M	03ZAG30C064DN
AKG12FS300	FSS-20-B-W125-02-N	BHG-350	PG-03M	03ZAG35C064DN
AKG12FS300	FSS-20-B-W125-02-N	BHG-350	PG-03M	03ZAG35C064DN
AKG12FS300	FSS-30-A-W125-03-N	BHG-350	PG-03M	03ZAG40C064DN
AKG12FS300	FSS-30-A-W125-03-N	BHG-350	PG-03M	03ZAG40C064DN
AKG12FS300	FSS-30-A-W125-03-N	BHG-350	PG-03M	03ZAG45C064DN
AKG12FS300	FSS-30-A-W125-03-N	BHG-350	PG-03M	03ZAG45C064DN
AKG12FS300	FSS-20-B-W125-02-N	BHG-350	PG-03M	03ZAG25C064DN
AKG12FS300	FSS-20-B-W125-02-N	BHG-350	PG-03M	03ZAG30C064DN
AKG12FS300	FSS-30-B-W125-04-N	BHG-350	PG-03M	03ZAG35C064DN
AKG12FS300	FSS-30-B-W125-04-N	BHG-350	PG-03M	03ZAG40C064DN
AKG12FS300	FSS-30-B-W125-04-N	BHG-350	PG-03M	03ZAG40C064DN
AKG12FS300	FSS-30-B-W125-04-N	BHG-350	PG-03M	03ZAG45C064DN
AKG12FS300	FSS-30-B-W125-04-N	BHG-350	PG-03M	03ZAG45C064DN
AKG12FS300	FSS-30-C-W125-05-N	BHG-350	PG-03M	03ZAG50C065DN
AKG12FS300	FSS-30-B-W125-04-N	BHG-350	PG-03M	03ZAG50C065DN
AKG12FS300	FSS-30-C-W125-05-N	BHG-350	PG-03M	03ZAG55C065DN
AKG12FS300	FSS-30-C-W125-05-N	BHG-350	PG-03M	03ZAG60C065DN
AKG13FS300	FSS-30-B-W125-04-N	BHG-350	PG-03M	03ZAG30C064DN
AKG13FS300	FSS-30-B-W125-04-N	BHG-350	PG-03M	03ZAG35C064DN
AKG13FS300	FSS-30-B-W125-04-N	BHG-350	PG-03M	03ZAG40C064DN
AKG13FS300	FSS-30-B-W125-04-N	BHG-350	PG-03M	03ZAG40C064DN
AKG13FS300	FSS-30-C-W125-05-N	BHG-350	PG-03M	03ZAG45C064DN
AKG13FS300	FSS-30-C-W125-05-N	BHG-350	PG-03M	03ZAG45C064DN
AKG13FS300	FSS-30-C-W125-05-N	BHG-350	PG-03M	03ZAG50C065DN
AKG13FS300	FSS-30-C-W125-05-N	BHG-350	PG-03M	03ZAG50C065DN
AKG13FS300	FSS-30-C-W125-05-N	BHG-350	PG-03M	03ZAG55C065DN
AKG13FS300	FSS-30-C-W125-05-N	BHG-350	PG-03M	03ZAG60C065DN
AKG13FS300	FSS-30-C-W125-05-N	BHG-350	PG-03M	03ZAG65C065DN
AKG13FS300	FSS-30-B-W125-04-N	BHG-350	PG-03M	03ZAG40C064DN
AKG13FS300	FSS-30-B-W125-04-N	BHG-350	PG-03M	03ZAG40C064DN
AKG13FS300	FSS-30-B-W125-04-N	BHG-350	PG-03M	03ZAG45C064DN
AKG13FS300	FSS-30-B-W125-04-N	BHG-350	PG-03M	03ZAG45C064DN
AKG13FS300	FSS-30-C-W125-05-N	BHG-350	PG-03M	03ZAG50C065DN
AKG13FS300	FSS-30-B-W125-04-N	BHG-350	PG-03M	03ZAG50C065DN
AKG13FS300	FSS-30-B-W125-04-N	BHG-350	PG-03M	03ZAG55C065DN
AKG13FS300	FSS-30-B-W125-04-N	BHG-350	PG-03M	03ZAG60C065DN
AKG13FS300	FSS-30-B-W125-04-N	BHG-350	PG-03M	03ZAG65C065DN

Hydrastore
Hydraulic Systems & Components

DC HYDRAULIC POWER UNITS - MICRO 90

DESCRIPTION

This series of DC power units, the micro 90, maximise on design and flexibility. Offering P & T as well as single and double acting hydraulic functions all within a very lightweight and compact design.

Note: Unless 3m pendant is detailed in part description it is not supplied.

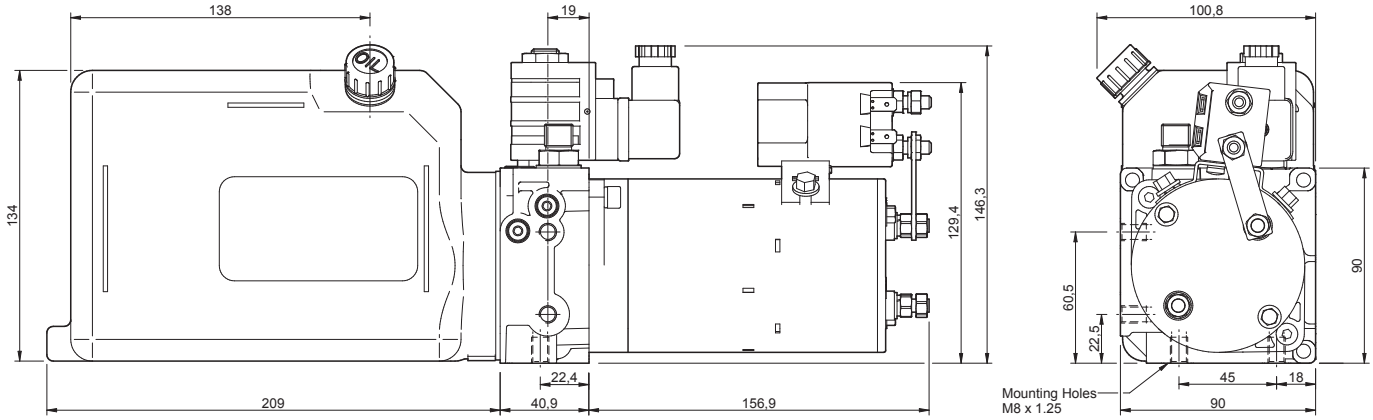

Micro 90

Part No.	Description	Max. flow (lpm)	Max. pressure (bar)	Power (kW)	Reservoir (litres)	Hydraulic Circuit	Electrical Circuit
ZAN-RFP910112	800W - 12VDC P/PACK + P & T PORT	3	150	0.8	2	A	1
ZAN-RFP910212	800W - 12VDC P/PACK + LIFT, CHECK AND DUMP	3	150	0.8	2	B	2
ZAN-RFP910312	800W - 12VDC P/PACK + LIFT CIRCUIT + 3M PENDANT	3	150	0.8	2	B	2
ZAN-RFP910412	800W - 12VDC P/PACK + D/A SOLENOID VALVE	3	150	0.8	2	C	2
ZAN-RFP910512	800W - 12VDC P/PACK + D/A SOL VALVE + 3M PENDANT	3	150	0.8	2	D	3

Hydraulic Circuits

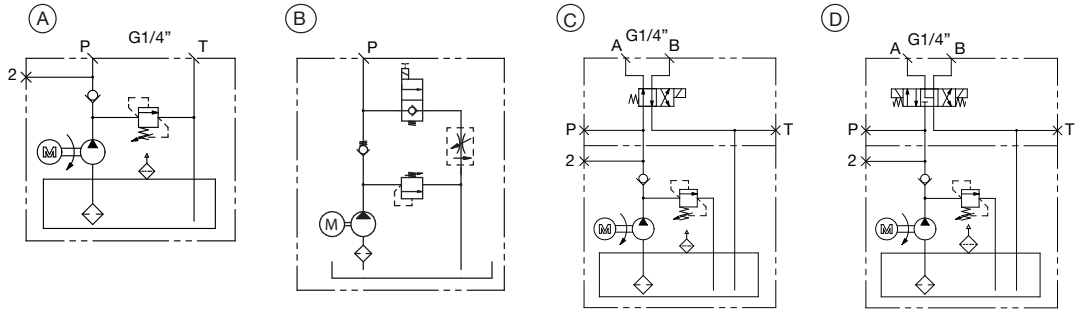

Electrical Circuits

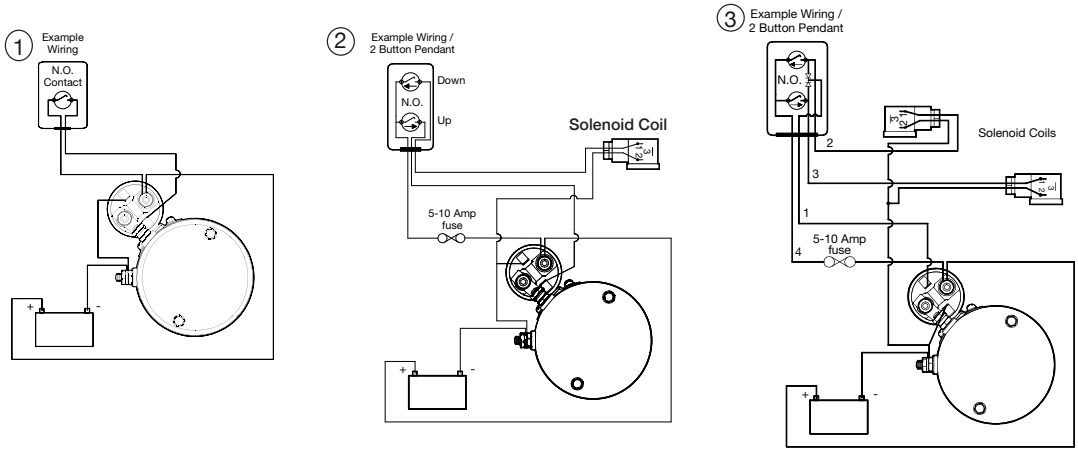

DC HYDRAULIC POWER UNITS - MINI 130

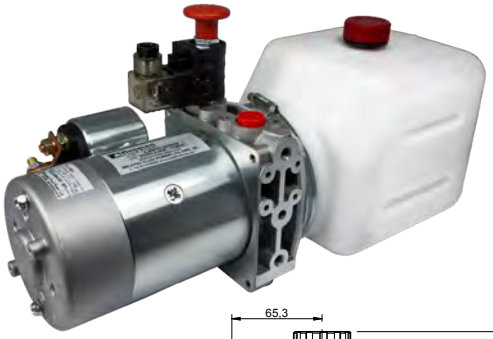

DESCRIPTION

This series of DC power units, the Mini 130, has been designed to offer the widest choice in standard configurations, while also allowing easy customisation to suit specific needs and requirements.

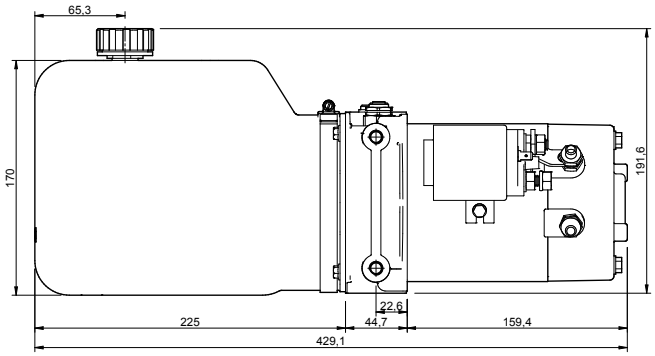

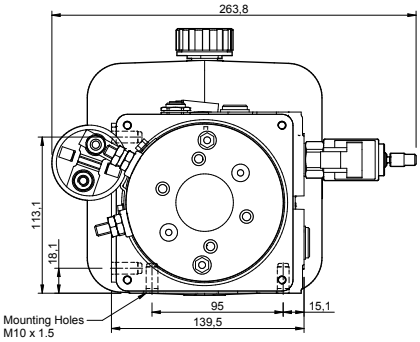

Mini 130

Part No.	Description	Max. flow (lpm)	Max. pressure (bar)	Power (kW)	Reservoir (litres)	Hydraulic Circuit	Electrical Circuit
ZAV-RFP920112	1.6KW - 12VDC P/PACK + P & T PORT	5	190	1.6	5	A	1
ZAV-RFP920212	1.6KW - 12VDC P/PACK + LIFT, CHECK AND DUMP	5	190	1.6	5	B	2
ZAV-RFP920312	1.6KW - 12VDC P/PACK + LIFT CIRCUIT + 3M PENDANT	5	190	1.6	5	B	2
ZAV-RFP920412	1.6KW - 12VDC P/PACK + D/A SOLENOID VALVE	5	190	1.6	5	C	2
ZAV-RFP920512	1.6KW - 12VDC P/PACK + D/A SOL VALVE + 3M PENDANT	5	190	1.6	5	D	3
ZAV-RFP920124	2.2KW - 24VDC P/PACK + P & T PORT	6	200	2.2	5	A	1
ZAV-RFP920224	2.2KW - 24VDC P/PACK + LIFT, CHECK AND DUMP	6	200	2.2	5	B	2
ZAV-RFP920324	2.2KW - 24VDC P/PACK + LIFT CIRCUIT + 3M PENDANT	6	200	2.2	5	B	2
ZAV-RFP920424	2.2KW - 24VDC P/PACK + D/A SOLENOID VALVE	6	200	2.2	5	C	2
ZAV-RFP920524	2.2KW - 24VDC P/PACK + D/A SOL VALVE + 3M PENDANT	6	200	2.2	5	D	3

Hydraulic Circuits

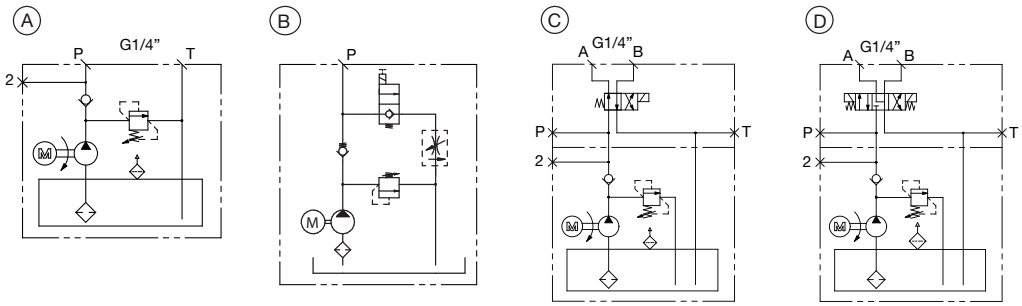

Electrical Circuits

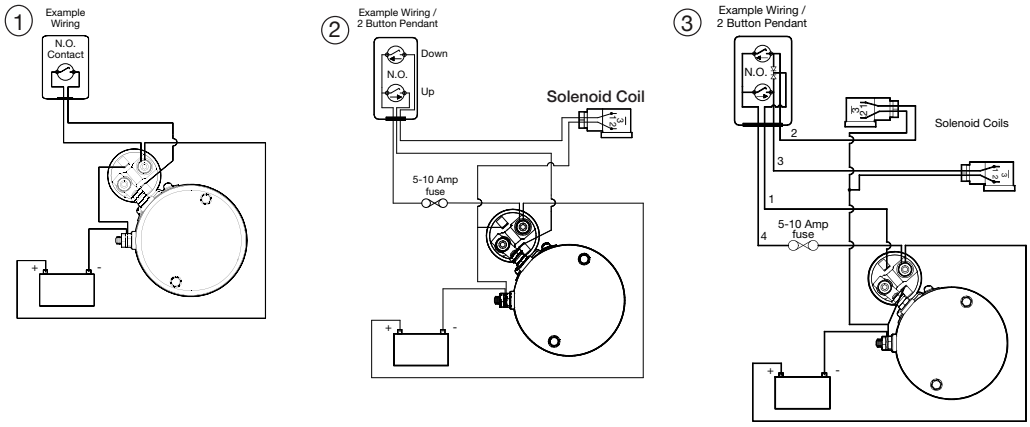

Hydrastore
Hydraulic Systems & Components

Online shop now open

Every stock item in this catalogue is now available online for next day delivery www.hydrastore.co.uk/shop

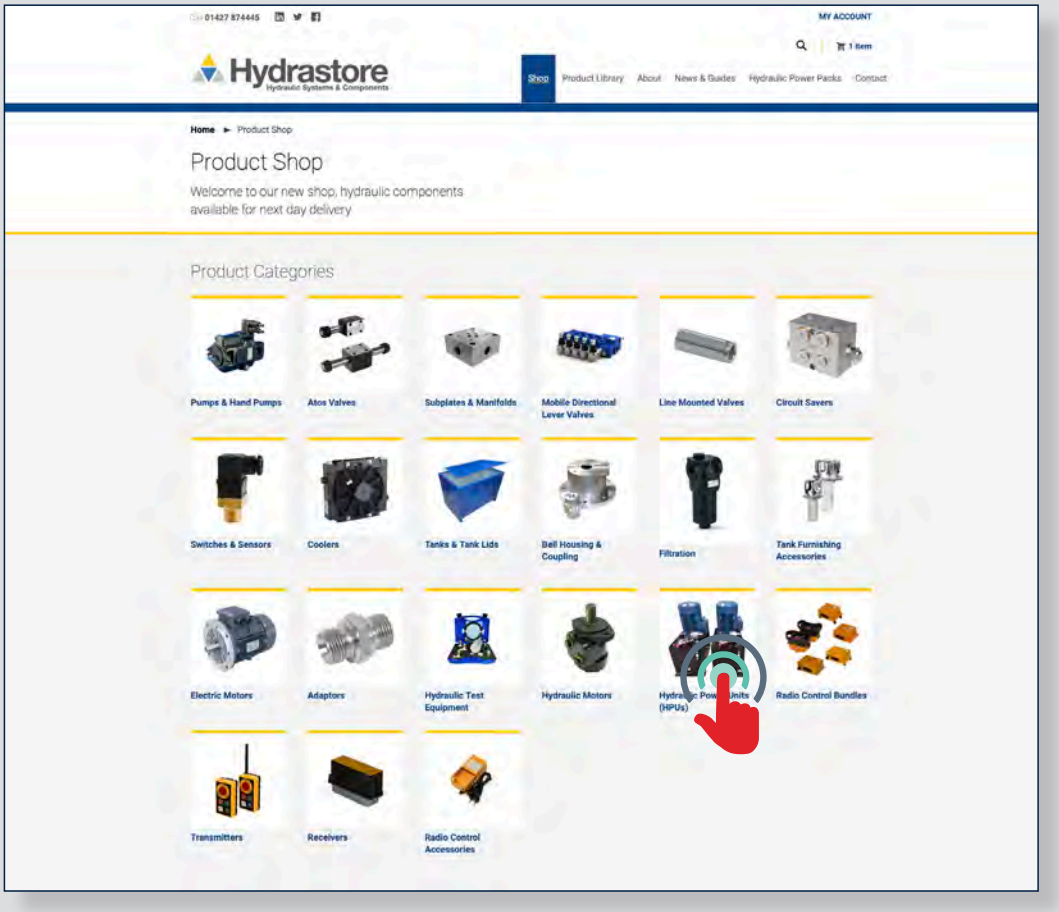

The main index menu is designed and categorised for quick and easy product selection...

Select 'Hydraulic Powerpacks'

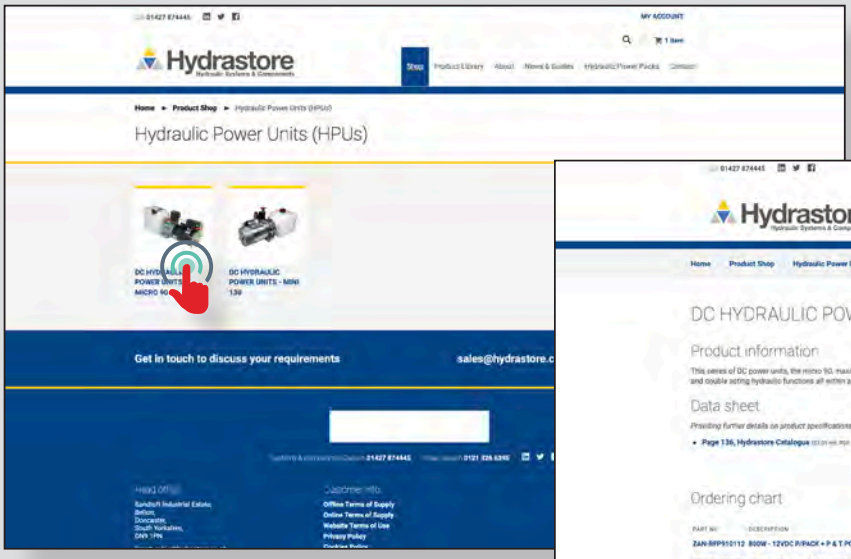

Select the item you need...

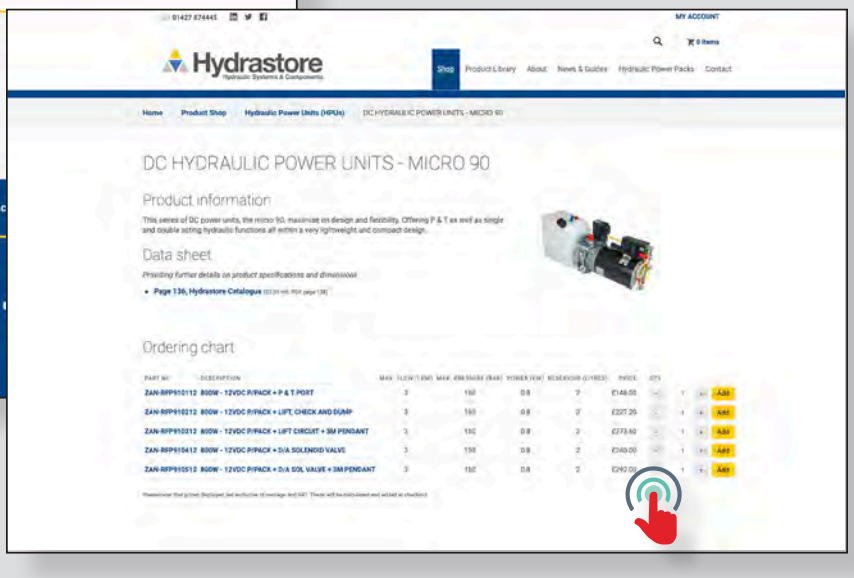

Select quantity from the options, add to basket, checkout, delivered!

Transmitter & Receiver Combinations

MINI TRANSMITTER BUNDLES 190
ERGO F TRANSMITTER BUNDLES 190
NOVA S TRANSMITTER BUNDLES 190
NOVA M TRANSMITTER BUNDLES 191
NOVA L TRANSMITTER BUNDLES 192
NOVA XL TRANSMITTER BUNDLES 192
POCKET TRANSMITTER BUNDLES 193
ERGO - F TRANSMITTER BUNDLES 173

Transmitters

MINI, POCKET, ERGO F 194
ERGO S, NOVA S 195
NOVA M, NOVA L 196
NOVA XL 197

Accessories

CHARGERS 199
BATTERIES 199
ANTENNAS 199

Receivers

MFSHL AC8/AC16 200
MFSHL DC8/DC16 200
MFSHL-2.4 GHZ 200
BMS-HL/BMS-2 200
RX ES-CAN/RX ES-PROFI 201
RX-14-HL 201
CAN-HL 201
DC MOBILE 201
MLC-HL 201

MINI TRANSMITTER BUNDLES – V4 UP TO 4 ON/OFF BUTTONS, V6 UP TO 6 ON/ OFF BUTTONS, 100M RANGE

+

CAN-HL Receiver

Part No.	Description
MINI-V4-CAN-HL	MINI V4 TX WITH CAN HL RX 100M SYSTEM
MINI-V6-CAN-HL	MINI V6 TX WITH CAN HL RX 100M SYSTEM

OR

Mini Transmitter
(Requires 3 x AA batteries)

DC Mobile Receiver
(12/24 vdc outputs)

Part No.	Description
MINI-V4-DC MOBILE	MINI V4 TX WITH DC MOBILE RX 100M SYSTEM
MINI-V6-DC-MOBILE	MINI V6 TX WITH DC MOBILE RX 100M SYSTEM

ERGO F TRANSMITTER BUNDLES –UP TO 11 ON/OFF BUTTONS PLUS 1 SWITCH, 100M RANGE

ERGO F

+

CAN-HL Receiver

Part No.	Description
ERGO-F-434-V1-CAN-HL	ERGO F 434 V1 TX WITH CAN HL RX 100M SYSTEM
ERGO-F-434-V2-CAN-HL	ERGO F 434 V2 TX WITH CAN HL RX 100M SYSTEM

OR

RX14 Receiver
(12/24 vdc 48/110/220 vac outputs)

Part No.	Description
ERGO-F-434-V1-RX14HL	ERGO F 434 V1 TX WITH RX14 HL RX 100M SYSTEM
ERGO-F-434-V2-RX14HL	ERGO F 434 V2 TX WITH RX14 HL RX 100M SYSTEM

NOVA S TRANSMITTER BUNDLES UP TO 5 ON/ OFF SWITCHES, 100M RANGE

NOVA S Transmitter

+

CAN-HL Receiver

Part No.	Description
NOVA-S-V2-CAN-HL	NOVA S V2 TX WITH CAN HL RX 100M SYSTEM

OR

DC Mobile Receiver
(12/24 vdc outputs)

Part No.	Description
NOVA-S-V2-DC-MOBILE	NOVA S V2 TX WITH DC MOBILE RX 100M SYSTEM

NOVA M TRANSMITTER BUNDLES
UP TO 4 LEVERS OR 2 JOYSTICKS, 100M RANGE

Nova M Transmitter

+

CAN-HL Receiver

Part No.	Description
NOVA-M-4K-CAN-HL	NOVA M 4K TX WITH CAN HL RX 100M SYSTEM
NOVA-M-4L-CAN-HL	NOVA M 4L TX WITH CAN HL RX 100M SYSTEM

OR

DC Mobile Receiver
(12/24 vdc outputs)

Part No.	Description
NOVA-M-4K-DC-MOBILE	NOVA M 4K TX WITH DC MOBILE RX 100M SYSTEM
NOVA-M-4L-DC-MOBILE	NOVA M 4L TX WITH DC MOBILE RX 100M SYSTEM

OR

HL-VC Receiver
(voltage control PVG)

Part No.	Description
NOVA-M-4K-HL-VC	NOVA M 4K TX WITH HL VC RX 100M SYSTEM
NOVA-M-4L-HL-VC	NOVA M 4L TX WITH HL VC RX 100M SYSTEM

OR

RX-14 Receiver
(12/24 vdc 48/110/220 vac outputs)

Part No.	Description
NOVA-M-4K-RX14HL	NOVA M 4K TX WITH RX14 HL RX 100M SYSTEM
NOVA-M-4L-RX14HL	NOVA M 4L TX WITH RX14 HL RX 100M SYSTEM

Note: Bundles* include loom and/or RX connector, 2 batteries (68301000) plus a charger (68108570.B)

*Mini and pocket transmitter bundles do NOT include batteries and a charger as operate with 3 x AA batteries

Note: Equipment is configured by Hydrastore in line with customer requirements

Hydrastore
Hydraulic Systems & Components

NOVA L TRANSMITTER BUNDLES UP TO 6 LEVERS OR 2 JOYSTICKS, 100M RANGE

Nova L Transmitter

+

CAN-HL Receiver

Part No.	Description
NOVA-L-4K-CAN-HL	NOVA L 4K TX WITH CAN HL RX 100M SYSTEM
NOVA-L-6L-CAN-HL	NOVA L 6L TX WITH CAN HL RX 100M SYSTEM

OR

DC Mobile Receiver(12/24 vdc outputs)

Part No.	Description
NOVA-L-4K-DC-MOBILE	NOVA L 4K TX WITH DC MOBILE RX 100M SYSTEM
NOVA-L-6L-DC-MOBILE	NOVA L 6L TX WITH DC MOBILE RX 100M SYSTEM

OR

HL-VC Receiver(voltage control PVG)

Part No.	Description
NOVA-L-4K-HL-VC	NOVA L 4K TX WITH HL VC RX 100M SYSTEM
NOVA-L-6L-HL-VC	NOVA L 6L TX WITH HL VC RX 100M SYSTEM

OR

RX-14 Receiver (12/24 vdc 48/110/220 vac outputs)

Part No.	Description
NOVA-L-4K-RX14HL	NOVA L 4K TX WITH RX14 HL RX 100M SYSTEM
NOVA-L-6L-RX14HL	NOVA L 6L TX WITH RX14 HL RX 100M SYSTEM

NOVA XL TRANSMITTER BUNDLES – UP TO 8 LEVERS OR 3 JOYSTICKS, 100M RANGE

NOVA XL Transmitter

+

CAN-HL Receiver

Part No.	Description
NOVA-XL-4K2L-CAN-HL	NOVA XL 4K2L TX WITH CAN HL RX 100M SYSTEM
NOVA-XL-6K-CAN-HL	NOVA XL 6K TX WITH CAN HL RX 100M SYSTEM
NOVA-XL-8L-CAN-HL	NOVA XL 8L TX WITH CAN HL RX 100M SYSTEM

OR

DC Mobile Receiver(12/24 vdc outputs)

Part No.	Description
NOVA-XL-4K2L-DC-MOBI	NOVA XL 4K2L TX WITH DC MOBILE RX 100M SYSTEM
NOVA-XL-6K-DC-MOBILE	NOVA XL 6K TX WITH DC MOBILE RX 100M SYSTEM
NOVA-XL-8L-DC-MOBILE	NOVA XL 8L TX WITH DC MOBILE RX 100M SYSTEM

OR

HL-VC Receiver(voltage control PVG)

Part No.	Description
NOVA-XL-4K2L-HL-VC	NOVA XL 4K2L TX WITH HL VC RX 100M SYSTEM
NOVA-XL-6K-HL-VC	NOVA XL 6K TX WITH HL VC RX 100M SYSTEM
NOVA-XL-8L-HL-VC	NOVA XL 8L TX WITH HL VC RX 100M SYSTEM

OR

RX-14 Receiver (12/24 vdc 48/110/220 vac outputs)

Part No.	Description
NOVA-XL-4K2L-RX14HL	NOVA XL 4K2L TX WITH RX14 HL RX 100M SYSTEM
NOVA-XL-6K-RX14HL	NOVA XL 6K TX WITH RX14 HL RX 100M SYSTEM
NOVA-XL-8L-RX14HL	NOVA XL 8L TX WITH RX14 HL RX 100M SYSTEM

POCKET TRANSMITTER BUNDLES – UP TO 6 ON/OFF BUTTONS, 30M RANGE

v1

+

AC8

Part No.	Description
POCKET-V1-AC8	POCKET V1 TX WITH AC8 RX 30M SYSTEM
POCKET-V2-AC8	POCKET V2 TX WITH AC8 RX 30M SYSTEM
POCKET-V5-AC8	POCKET V5 TX WITH AC8 RX 30M SYSTEM

OR

v2

v5

DC8

Part No.	Description
POCKET-V1-DC8	POCKET V1 TX WITH DC8 RX 30M SYSTEM
POCKET-V2-DC8	POCKET V2 TX WITH DC8 RX 30M SYSTEM
POCKET-V5-DC8	POCKET V5 TX WITH DC8 RX 30M SYSTEM

Pocket Transmitter
(Requires 3 x AA batteries)

ERGO - F TRANSMITTER BUNDLES – UP TO 11 ON/OFF BUTTONS PLUS 1 SWITCH, 30M RANGE

Ergo F Transmitter

+

AC16

Part No.	Description
ERGO-F-MFSHL-V1-AC16	ERGO F MFSHL V1 TX WITH AC16 RX 30M SYSTEM
ERGO-F-MFSHL-V2-AC16	ERGO F MFSHL V2 TX WITH AC16 RX 30M SYSTEM

OR

DC16

Part No.	Description
ERGO-F-MFSHL-V1-DC16	ERGO F MFSHL V1 TX WITH DC16 RX 30M SYSTEM
ERGO-F-MFSHL-V2-DC16	ERGO F MFSHL V2 TX WITH DC16 RX 30M SYSTEM

Note: Bundles* include loom and/or RX connector, 2 batteries (68301000) plus a charger (68108570.B)

*Mini and pocket transmitter bundles do NOT include batteries and a charger as operate with 3 x AA batteries

Note: Equipment is configured by Hydrastore in line with customer requirements

Mini v4

Mini v6

Mini Series
434 - Digital (100m)
Standard Options:
- 1-7 DK Buttons
- Mushroom E.stop Available
- 1 or 2 Step Buttons

Part No.	Description	Frequency	Range (m)
80502405.C-434TR	MINI V4 MUSHROOM STOP BUTTON & 4 PUSH BUTTON	434	100
80502410.E-434TR	MINI V6 STOP BUTTON & 7 X STANDARD PUSH BUTTON	434	100

Pocket v1

Pocket v2

Pocket v5

Pocket Series
MFSHL - Digital (30m)
Standard Options:
- 1-7 DK Buttons
- Button E.stop
- Mixture of 1 or 2 Step Buttons
- Simple MFSHL “Learn” Button For Pairing
- Very cost effective (vs Mini series)

Part No.	Description	Frequency	Range (m)
71615018.A	POCKET V1 STOP PB, 1 X STANDARD PB, 2 X 2 STEP PB	MFHSL	30
71615028.A	POCKET V2 STOP PB, 1 X STANDARD PB, 4 X 2 STEP PB	MFHSL	30
71615058.A	POCKET V5 STOP PB, 1 X STANDARD PB, 6 X 2 STEP PB	MFHSL	30

Ergo F

Ergo-F Series
434 - Digital (100m)
MFSHL - Digital (30m)
Standard Options:
- 9-12 DK Buttons
- Start/Stop + Removable stop cap
- Mixture of 1, 2 or 3 Step Buttons
- Simple MFSHL “Learn” Button For Pairing (not on 434)
- Toggle Switch

Part No.	Description	Frequency	Range (m)
71671010.A-434TR	ERGO F V1A SCREEN 11 STD PB, 1 SWITCH	434	100
71671020.A-434TR	ERGO F V2A SCREEN 3 STD PB 8 X 2 STEP PB, 1 SWITCH	434	100
71671210.A	ERGO F V1A 11 STD PB, 1X SWITCH	MFSHL	30
71671220.A	ERGO F V2A 3 STD PB 8 X 2 STEP PB, 1X SWITCH	MFSHL	30

Ergo-S V2

Ergo-S Series
434 - Digital (100m)
MFSHL - Digital (30m)
Standard Options:
- Upto 12 Buttons
- Includes Joystick
- 2.4” TFT Screen
- Simple MFSHL “Learn” Button For Pairing (not on 434)
Currently not standard, please check lead time
Fully Programmable

Part No.	Description	Frequency	Range (m)
7169212101.A-434	ERGO-S V2 TFT SCREEN, JOYSTICK 434, PB’S	434	100
7169112101.A	ERGO-S V2 TFT SCREEN, JOYSTICK MFHSL, PB’S	MFHSL	30

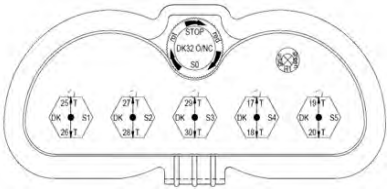

Nova-S V2

Nova-S
434 - Digital (100m)
Standard Options:
- 3-5 Toggle Switches
- Mushroom E.stop
- Light
- “Bulletproof”

Part No.	Description	Frequency	Range (m)
71000020.B-434	NOVA-S V2 5X 3 POS 2 WAY TOGGLE SWITCHES. 434	434	100

Nova M-4L

Nova M-4K

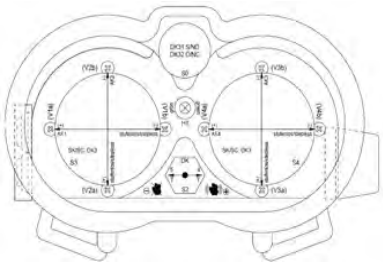

Nova M-4K

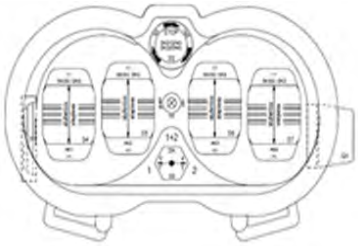

Nova M-4L

Nova-M
434 - Digital (100m)
Standard Options:
- Mushroom E.stop
- Upto 2x 2Axis Joysticks
- Analogue Poportional Joystick Options
- Designed For Operation With Gloves
- Lever Operators Available

Part No.	Description	Frequency	Range (m)
71110200.B-434	NOVA-M-4L 4X LEVER, 1 STOP PB, 1X TOG, 2X PB 434	434	100
71110140.D-434	NOVA-M-4K 2 AXIS JOYS, 1X MS 1X TOG SW, 2X PB. 434	434	100

Nova L 4K

Nova L 6L

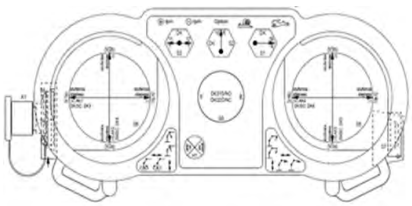

Nova L 4K

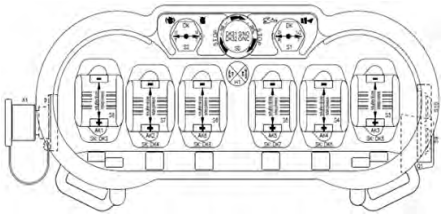

Nova L 6L

Nova-L
434 - Digital (100m)
DC Mobile
Standard Options:
- Mushroom E.stop
- Upto 6 Levers or 2x 2Axis Joysticks
- Analogue Poportional Joystick/Levers
- Sureseal Option Available

Part No.	Description	Frequency	Range (m)
71120080.B-434	NOVA-L-6L 6X LEVERS, 1 STOP PB, 2X TOG, 2X PB 434	434	100
71110130.E-434	NOVA-L-4K 2X 2 AXIS JOYSTICKS 434 , SEE PIC	434	100

Nova XL 6K

Nova XL 8L

Nova-XL
434 - Digital (100m)
Standard Options:
- Mushroom E.stop
- Upto 8 Levers or 3x 2Axis Joysticks
- Analogue Poportional Joystick/Levers
- Sureseal Option Available
- Displays Available

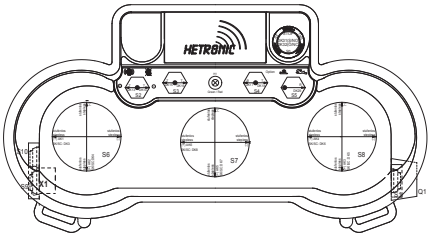

Nova XL 6K

Nova XL 8L

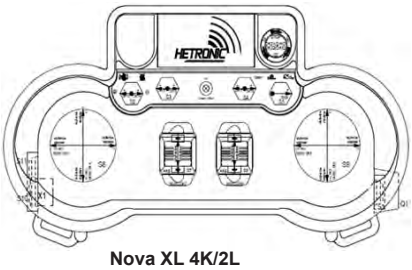

Nova XL 4K/2L

Part No.	Description	Frequency	Range (m)
71130160.D-434	NOVA-XL-6K 3X 2 AXIS JOYSTICK, 434 SEE PIC	434	100
71130080.D-434	NOVA-XL-8L 8 LEVERS AND OTHERS 434, SEE PIC	434	100
71120150.C-434	NOVA-XL-4K/2L EXCAVATOR LAYOUT 434, SEE PIC	434	100

Transmitter / Receiver combinations

TRANSMITTER		RECEIVERS										
		MFSHL					434 MHz					
Model		AC8	AC16	DC8	DC16	MFSHL 2.4	BMS-2	ES CAN & CAN-HL	RX-14 HL	DC MOBILE	BMS-HL-VC	ML C-HL
MINI	v4 434							X		X		
	v6 434							X		X		
POCKET	v1 MFSHL	X	X	X	X							
	v2 MFSHL	X	X	X	X							
	v5 MFSHL	X	X	X	X							
ERGO-F	v1A 434							X	X	X		
	v2A 434							X	X	X		
	v1A MFSHL	X	X	X	X							
	v2A MFSHL	X	X	X	X							
ERGO-S	v2 434						X	X	X		X	
	v2 MFHSL		X		X	X						
NOVA-S	V2 434							X		X		
NOVA-M	434 4K						X	X	X	X		
	434 4K						X	X	X		X	X
NOVA-L	434 4K						X	X	X		X	X
	434 6L						X	X	X		X	X
NOVA-XL	434 6K						X	X	X		X	X
	434 8L						X	X	X		X	X
	434 4K 12L						X	X	X		X	X

Note: These are common selections. Alternative combinations are available on request.

Examples of custom style radio remote controls designed and built at Hydrastore.

CHARGERS

Part No.	Description	Series	Image
68108570.B	MINI 3.6V EURO PLUG 90-270VAC 300/780MA	MINI, ERGO, ERGO-F, NOVA-S, NOVA-M, NOVA-L, NOVA-XL (screened versions requiring 9Ah lithium-ion battery charger see below).	
68108670.B	3.6V SLIDING SOCKET 10-30VDC 300/780MA		
68108690.B	3.6V CIGARETTE LIGHTER 10-30VDC 300/780MA		
68108870	UCH-3 9-30VDC 1A FOR 3.7V/9AH BATTERY	For screened transmitters requiring lithium-ion 9Ah batteries	

BATTERIES

Part No.	Description	Series	Image
68301000	HETRONIC BATTERY MINI 3.6V/2,75 AH GREY NIMH	MINI, ERGO, ERGO-F, NOVA-S, NOVA-M, NOVA-L, NOVA-XL (4.x" screened versions require alternative charger/batteries).	

ANTENNAS

Part No.	Description	Series	Image
56504011	MINIFLEX 420-480MHZ, TNC PLUG, LENGTH 103MM.	Fit all standard receivers, universal fit subject to frequency	
56506500	ANTENNA DUAL BAND 420-480/850-950MHZ TNC PLUG		
56504100	ANTENNA GAINFLEX 850-950MHZ TNC PLUG		
56503010	ANTENNA GAINFLEX 440-470MHZ TNC PLUG		

Part No.	Description	Range (m)	Digital Outputs	Analogue Outputs	Digital Inputs	Analogue Inputs
72095088.B	MFSHL AC8 48 - 220 Vac, H LINK 868 MHz	30	8	0	0	0
72095168.A	MFSHL AC16 48 - 220 Vac, H LINK 868 MHz	30	16	0	3	0

Part No.	Description	Range (m)	Digital Outputs	Analogue Outputs	Digital Inputs	Analogue Inputs
72075088.A	MFSHL DC8 12-24 Vdc, H LINK 868 MHz	30	8	0	0	0
72085168.A	MFSHL DC16 12-24 Vdc, H LINK 868 MHz	30	16	2	2	0

Part No.	Description	Range (m)	Digital Outputs	Analogue Outputs	Digital Inputs	Analogue Inputs
74021400.B	MFSHL-DC16 2.4 GHz 12-24 Vdc H LINK	30	12	2	4	4

Part No.	Description	Range (m)	Digital Outputs	Analogue Outputs	Digital Inputs	Analogue Inputs
72041400.B-434TR	BMS-HL-VC 12-24 Vdc CAN H LINK 434 MHz VDC CONTROL	100	12	8	8	0
72041300.B-434	BMS-2 12-24 Vdc, CAN, H LINK . 434 MHz	100	8	16	6	0

Note: Receivers have to be configured by Hydrastore, consult the sales desk for further details.
Note: Selected models have versatile inputs and outputs configurations, consult full datasheet or our sales desk for further details.
Note: Receivers have different current capabilities, check datasheet for specific information.
Note: Range is line of sight.

Receivers

Part No.	Description	Range (m)	Digital Outputs	Analogue Outputs	Digital Inputs	Analogue Inputs
80060948.C-434TR	ES-CAN 12-24 Vdc, H LINK . 434 MHz	100	0	0	0	0
74103110.D-434	ES-PROFI 12-24 Vdc, H LINK . 434 MHz	100	0	0	0	0

Part No.	Description	Range (m)	Digital Outputs	Analogue Outputs	Digital Inputs	Analogue Inputs
72251140.B-434TR	RX-14 HL 12-24Vdc 48/110/220Vac H LINK 434 MHz	100	30	4	4	0

Part No.	Description	Range (m)	Digital Outputs	Analogue Outputs	Digital Inputs	Analogue Inputs
74101000.B-434TR	CAN-HL 12-24Vdc, H LINK . 434 MHz	100	2	0	0	0

Part No.	Description	Range (m)	Digital Outputs	Analogue Outputs	Digital Inputs	Analogue Inputs
74021250.B-434TR	DC Mobile 12-24 Vdc, H LINK . 434 MHz	100	9	4	4	4

Part No.	Description	Range (m)	Digital Outputs	Analogue Outputs	Digital Inputs	Analogue Inputs
72041200.B-434TR	MLC 12-24 Vdc, H LINK . 434 MHz	100	12	8	8	8

Overview:

It’s very important to us at Hydrastore that we support our customers and partners to the best of our ability. We pride ourselves in the service we offer and the technical support we provide.
One of the things we have been challenged by over the years is clearly defining our exceptional product range, however, for the first time ever we believe this new overview section provides exactly that.

Whether you’re a technician, engineer or systems developer this section of the catalogue will allow you to quickly locate an item suitable for your application. Once you’ve found your choice or narrowed down your option’s you can either speak to our sales or technical team or alternatively find the full technical datasheets on our website.

www.hydrastore.co.uk

Pumps overview

PUMPS RONZIO

GEAR TYPE 204

PUMPS HANSA

CLOSED CIRCUIT PISTON TYPE 206

PUMPS KAWASAKI

OPEN CIRCUIT PISTON TYPE 208

CLOSED CIRCUIT PISTON TYPE 209

PUMPS DANFOSS

OPEN CIRCUIT PISTON TYPE 210

CLOSED CIRCUIT PISTON TYPE 210

PUMPS ATOS

VANE TYPE, SINGLE AND TANDEM 212

RADIAL PISTON TYPE 212

AXIAL PISTON TYPE 212

Hydrastore
Hydraulic Systems & Components

ronzio OLEODINAMICA

SPECIFICATIONS:

- Fully cast iron construction
- High pressure capability
- Axial compensation for high performance.
- High volumetric efficiency: 95% average.
- Speeds up to 6000 rpm
- Taper, parallel, keyed, splined shaft options
- Multiple flange option
- Multiple porting options

GEAR TYPE

GROUP 1 ALUMINIUM PUMPS

Z1 aluminium pumps with cast iron or aluminium covers.

Displacement (cm/rev)	Pressure (bar)	Max. Pressure (bar)	Maximum speed (rpm)	Weight (kg)
1.08	240	280	6000	0.9
1.59	240	280	6000	0.9
2.09	240	280	6000	0.9
2.59	230	280	5500	0.9
3.15	210	270	4500	0.9
3.68	210	260	4000	0.9
4.19	190	240	3800	0.9
4.79	180	230	3500	0.9
5.49	170	210	3500	0.9
6.2	150	190	3000	0.9
7.81	130	170	3000	0.9
8.82	120	160	3000	0.9

GROUP 2 ALUMINIUM PUMPS

Group Z2 aluminium pumps with cast iron covers.

Displacement (cm/rev)	Pressure (bar)	Max. Pressure (bar)	Maximum speed (rpm)	Weight (kg)
4.4	300	360	4500	3.3
6.28	300	360	4500	3.5
8.16	300	360	3700	3.5
11.3	300	360	3300	3.9
14.45	300	360	2700	4
16.95	270	330	2500	4.2
20.1	230	290	2500	4.4
25.75	180	230	2500	4.5
31.4	160	200	2500	4.8

GROUP 3 ALUMINIUM PUMPS

Z3 Aluminium pumps with cast iron covers.

Displacement (cm/rev)	Pressure (bar)	Max. Pressure (bar)	Maximum speed (rpm)	Weight (kg)
19.9	280	310	3000	11
24.9	280	310	3000	11
29.9	280	310	3000	11
34.3	280	310	3000	11
40.5	250	280	2700	11
45.2	250	280	2700	11
49.9	230	250	2200	11
54.4	230	250	2200	11
60	200	220	2000	13
63.9	200	220	2000	13
70	170	190	1800	13
78.7	170	190	1800	13
86.6	160	180	1800	13

GROUP 2 CAST IRON

W2 Cast iron pumps strong and compact.

Displacement (cm/rev)	Pressure (bar)	Max. Pressure (bar)	Maximum speed (rpm)	Weight (kg)
4.4	300	350	3500	4.8
6.28	300	350	3500	50
8.16	300	350	3500	5.1
11.3	300	350	3000	5.4
15.5	260	320	3000	5.8
20.5	230	270	2500	6
26.1	200	240	2300	6.4
38.8	140	175	2000	7.2

GROUP 3 CAST IRON

W3 Cast iron pumps strong and compact.

Displacement (cm/rev)	Pressure (bar)	Max. Pressure (bar)	Maximum speed (rpm)	Weight (kg)
15.5	300	350	3000	10
24.9	300	350	3000	10.5
34.3	280	330	2500	11
45.2	250	300	2200	12
54.4	230	270	2000	12.5
63.9	200	240	2000	13
78.7	170	210	1800	14

GROUP 4 CAST IRON

W4 Cast iron pumps strong and compact.

Displacement (cm/rev)	Pressure (bar)	Max. Pressure (bar)	Maximum speed (rpm)	Weight (kg)
72.1	270	320	1800	
88.7	250	300	1800	
105.4	240	280	1500	
127.5	220	260	1500	
149.7	180	220	1500	

Note: We can provide multiple pump combinations - Contact our sales team for details

Hydrastore
Hydraulic Systems & Components

HANSA · TMP srl

CLOSED CIRCUIT PISTON TYPE

Hansa-TMP manufactured products provide the perfect solution for high-power closed-circuit transmission systems where space is of a premium. All pumps have integral charge pump.

TPV 1100

Features:

- High rotation speed
- Compact design
- Suitable for multiple pump assembly

Displacement (cm3/rev)	Pressure (bar)	Max. Pressure (bar)	Maximum speed (rpm)	Weight kg (single pump)
6	30		3900	11
8				
9				
11				
12				
13				
15	25			
17				
18				
19	22		3200	
21				

TPV 1300 BTB

Features:

- Low noise level
- High rotation speed
- Compact design and reduced length
- Suitable for multiple pump assembly

Displacement (cm3/rev)	Pressure (bar)	Max. Pressure (bar)	Maximum speed (rpm)	Weight kg (single pump)
6	30		3900	23
8				
9				
11				
12				
13				
15	25			
17				
18				
19	22		3200	
21				

TPV 1500

Features:

- Low noise level
- High rotation speed
- High performances
- Compact design
- Suitable for multiple pump assembly – shown with optional pump
- Built in pressure relief valves

Displacement (cm3/rev)	Pressure (bar)	Max. Pressure (bar)	Maximum speed (rpm)	Weight kg (single pump)
17	30	350	3600	14 (single pump)
18				
19				
21				

TPV 2500 BTB

Features:

- Compact design
- Integrated optionals
- High power to weight ratio
- Low noise integrated boost pump

Displacement (cm3/rev)	Pressure (bar)	Max. Pressure (bar)	Maximum speed (rpm)	Weight kg
22	40		3600	25 (single pump) 45 (tandem pump)
25				
28				
31				
38				

HANSA · TMP srl

TPV 3600

Features:

- High rotation speed
- Compact design
- Suitable for multiple pump assembly

Displacement (cm3/rev)	Pressure (bar)	Max. Pressure (bar)	Maximum speed (rpm)	Weight kg (single pump)
24	400	420	3600	26
28				
30				
32				
34				
36				
38				

TPV 5000

Features:

- High rotation speed
- Compact design
- Suitable for multiple pump assembly

Displacement (cm3/rev)	Pressure (bar)	Max. Pressure (bar)	Maximum speed (rpm)	Weight kg (single pump)
46	300	400	3600	29
50				
64				

Control options for all products

- By-pass valve
- Control lever with or without returns spring
- Hydraulic servo-control
- Electric proportional servo-control
- Man on board
- Purge valve
- SAE-A or SAE-B (only servo) mounting
- Screw by-pass

TPV 4300

Features:

- High rotation speed
- Compact design
- Suitable for multiple pump assembly
- Built in pressure relief valves

Displacement (cm3/rev)	Pressure (bar)	Max. Pressure (bar)	Maximum speed (rpm)	Weight kg (single pump)
32	280	320	3900	24
38				
45				
50				

Hydrastore
Hydraulic Systems & Components

Kawasaki
Powering your potential

K3VL

The K3VL series swash plate type axial piston pumps are designed to satisfy a variety of industrial, construction and off-highway applications where a medium to high pressure variable displacement pump is required.

Pump control options: Press comp, load sense, power shift, torque limit, electronic displacement

Displacement (cm3/rev.)	Pressure (bar)	Max. Pressure (bar)	Maximum speed (rpm)	Weight (kg)
28	320	350	3000 (3600*)	20
45			2700 (3250*)	27
80	320		2400 (3000*)	35
112			2200 (2700*)	65
140			2200 (2500*)	65
200			1900 (2200*)	95-130

K3VLS

Kawasaki's new medium duty pump, the K3VLS, has been developed for machines and equipment that use a load sensing control system and/or electric displacement control systems. Its launch follows extensive research and development as our engineers combined efficiency with simplicity to deliver the most technologically advanced pump on the market.

Pump control options: Press comp, load sense, power shift, torque limit, electronic displacement

Displacement (cm3/rev.)	Pressure (bar)	Max. Pressure (bar)	Maximum speed (rpm)	Weight (kg)
50	280	350	2700 (3250*)	21
65			2600 (3000*)	25
85			2500 (3000*)	31
105			2300 (2640*)	37
125			2200 (2400*)	54
150			2200 (2400*)	52

OPEN CIRCUIT PISTON TYPE

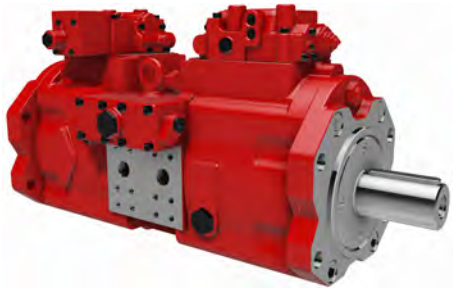

K3VG / DT

The K3VG series are tandem swash-plate type axial piston pumps which give excellent performance in high flow industrial applications in a compact and cost-effective package.

K3VG

Displacement (cm3/rev.)	Pressure (bar)	Max. Pressure (bar)	Maximum speed (rpm)	Weight (kg)
63	350	400	2600 (3250*)	48
112			2200 (2700*)	68
180			1850 (2300*)	86
280			1600 (2000*)	160

K3VG-DT

Displacement (cm3/rev.)	Pressure (bar)	Max. Pressure (bar)	Maximum speed (rpm)	Weight (kg)
180 (360)	350	400	1800 (2300*)	160
280 (560)			1500 (2000*)	300
180	343	400	1850 (2200*)	145

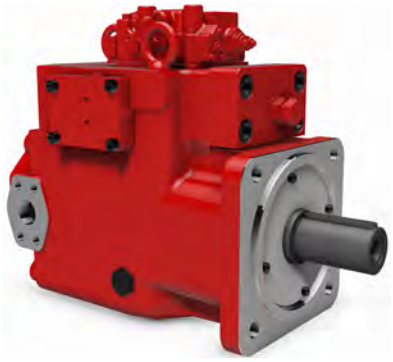

K7VG

The K7VG series of high-pressure swash plate type pumps was developed for general industrial machinery use. The adoption of the high-load bearings and friction-free contacting mechanism of piston shoes, results in a high level of reliability and long life.

Displacement (cm3/rev.)	Pressure (bar)	Max. Pressure (bar)	Maximum speed (rpm)	Weight (kg)
180	350	400	1800 (2200*)	145
265	350	400	1500 (1500*)	225

OPEN CIRCUIT PISTON TYPE

K3V / K5V

The K3V / K5V pumps have been specifically designed to meet the demands of hydraulic excavators and other mobile machinery.

Pump control options: Extensive range of responsive control options available.

K3V

Displacement (cm3/rev.)	Pressure (bar)	Max. Pressure (bar)	Maximum speed (rpm)	Weight (kg)
63	343	392	2650 (3250*)	48
112			2360 (2700*)	68
140			2150 (2500*)	86
280			1600 (2000*)	140

K3V-DT - Tandem

Displacement (cm3/rev.)	Pressure (bar)	Max. Pressure (bar)	Maximum speed (rpm)	Weight (kg)
63 (126)	343	392	2650 (3250*)	48
112 (224)			2360 (2700*)	68
140 (280)			2150 (2500*)	86
280 (460)			1600 (2000*)	140

K5V

Displacement (cm3/rev.)	Pressure (bar)	Max. Pressure (bar)	Maximum speed (rpm)	Weight (kg)
80	343	392	2460 (3000*)	48
140			2160 (2500*)	68
160			2000 (2350*)	86
200			1900 (2200*)	86

K5V-DT - Tandem

Displacement (cm3/rev.)	Pressure (bar)	Max. Pressure (bar)	Maximum speed (rpm)	Weight (kg)
80 (160)	343	392	2460 (3000*)	81
140 (280)			2160 (2500*)	125
160 (320)			2000 (2350*)	160
200 (400)			1900 (2200*)	160

CLOSED CIRCUIT PISTON TYPE

K8V

The K8V series is Kawasaki's new closed loop pump with excellent controllability and superior efficiency. It is used in hydrostatic transmissions on a variety of off-highway machinery. Integral charge pump.

Pump control options: Extensive range of responsive control options available.

Displacement (cm3/rev.)	Pressure (bar)	Max. Pressure (bar)	Maximum speed (rpm)	Weight (kg)
90	400	450	3800	72
130			3450	95

Note: * Boosted inlet >= 1.3 BAR Absolute and less than 10 BAR

Hydrastore
Hydraulic Systems & Components

Danfoss

OPEN CIRCUIT PISTON TYPE

D1

The D1 pump is a high-pressure, high-performance variable axial piston pump, developed specifically for open-circuit systems in the most extreme application environments. Its robust design makes it an ideal solution for the toughest needs. The D1 pump expands the functionality and control options of our current portfolio to include higher hydraulic power product options. Our entire high power open circuit products are designed for high quality, reliability with high efficiency for easy installation.

Displacement (cm3/rev.)	Pressure (bar)	Max. Pressure (bar)	Maximum speed (rpm)	Weight (kg)
130	350	400	2500	68
145				68
193				102
260			2300	141

SERIES 45 AXIAL PISTON PUMP

Series 45 offers a full line of displacements, controls, pressures and configurations that have been engineered to fit a wide variety of open circuit pump application.

Displacement (cm3/rev.)	Pressure (bar)	Max. Pressure (bar)	Maximum speed (rpm)	Weight (kg)
25	260	350	3200	19-24
30	210	300		
38	260	350	2650	
45	210	300		
45	310	400	2800	23-27.3
51			2700	
60			2600	
65	260	350	2500	23.1-27.3
75			2400	
74	310	400		29.5-32.6
90	260	350	2200	
100	310	400	2800	51.3-54.9
130			2200	
147	260	350	2100	

CLOSED CIRCUIT PISTON TYPE

MP1

The Danfoss MP1 is the next evolution in closed circuit axial piston pumps. No matter what industry you serve MP1 pumps offer the performance needed for today's small- to medium-sized equipment manufacturers. This is another example of Danfoss's commitment to the mobile hydraulics industry.

Displacement (cm3/rev.)	Pressure (bar)	Max. Pressure (bar)	Maximum speed (rpm)	Weight (kg)
28	350	380	3400	29.6
31.8				
38	350	380	3300	38
45.1				

H1P

The Danfoss H1P is part of Danfoss' H1 family. It has pioneered not only the closed circuit variable displacement axial piston pumps but also been extremely influential within the whole mobile hydraulic industry. Based on Danfoss's decades of experience the H1P will provide the highest quality and standards. As well as being one of the best-in-class, it is also innovative, and extremely efficient.

Displacement (cm3/rev.)	Pressure (bar)	Max. Pressure (bar)	Maximum speed (rpm)	Weight (kg)
45	420	450	3400	41
53.8	380	400		
60.4	420	450	3500	50
68	380	400		
69.2	450	480		56
78.1				
89.2			3300	62
101.7				
115.2			3200	83
130				
147.2			3000	96
165.1				
211.5			2600	163
251.7				

DIGITAL DISPLACEMENT PUMP

The Danfoss digital displacement pump offers a unique combination of innovative pump design and electronic integration. The net result provides greater accuracies and efficiency over that of conventional pumps. In an age where energy efficiency is paramount the application of a Danfoss Digital Displacement Pump (DDP) needs serious consideration.

Displacement (cm3/rev)	Pressure (bar)	Max. Pressure (bar)	Maximum Speed (rpm)	Weight (kg)
0-96	420	450	1850	51.6

Hydrastore
Hydraulic Systems & Components

atos

VANE TYPE, SINGLE AND TANDEM

Heading / Type / Mounting / Format	Part number	Description	Pressure (bar)	Flow (lpm)	Size	Catalogue Page
Fixed Displacement	PFE-31	Vane Pump, 10.5 - 43.7cc/rev.	160-210	Fixed	10.5-43.7cc/rev.	A005
Fixed Displacement	PFE-41	Vane Pump, 29.3 - 85.3cc/rev.	210	Fixed	29.3-85.3cc/rev.	A005
Fixed Displacement	PFE-51	Vane Pump, 90 - 150.2cc/rev.	210	Fixed	90-150.2cc/rev.	A005
Fixed Displacement	PFE-32	Vane Pump, 16.5 - 35.6cc/rev.	210-300	Fixed	16.5-35.6cc/rev.	A007
Fixed Displacement	PFE-42	Vane Pump, 45 - 85.3cc/rev.	210-280	Fixed	45-85.3cc/rev.	A007
Fixed Displacement	PFE-52	Vane Pump, 90 - 150.2cc/rev.	210-250	Fixed	90-150.2cc/rev.	A007
Fixed Displacement - multiple	PFED	Vane Pump, 29.3+16.5cc/rev. - 150.2+85.3cc/rev., single body, common suction	210	Fixed	9.3+16.5cc/rev. - 150.2+85.3cc/rev.	A180
Fixed Displacement - multiple	PFEX	Vane Pump, tandem & triple options, 10.5 - 150.2cc/rev.	160-300	Fixed	10.5 - 150.2cc/rev.	A190

RADIAL PISTON TYPE

Heading / Type / Mounting / Format	Part number	Description	Pressure (bar)	Flow (lpm)	Size	Catalogue Page
Fixed Displacement	PFR-2	Radial piston pump, 1.7 -3.5cc/rev.	500	Fixed	1.7-3.5cc/rev.	A045
Fixed Displacement	PFR-3	Radial piston pump, 8.2 -14.7cc/rev.	350	Fixed	8.2-14.7cc/rev.	A045
Fixed Displacement	PFR-5	Radial piston pump, 18.1 -25.4cc/rev.	350	Fixed	18.1-25.4cc/rev.	A045

AXIAL PISTON TYPE

Heading / Type / Mounting / Format	Part number	Description	Pressure (bar)	Flow (lpm)	Size	Catalogue Page
Variable Displacement	PVPC	Axial piston, mechanical control, 29-140cc/rev.	250-280	Variable	29-140cc/rev.	A160
Variable Displacement	PVPC	Axial piston, proportional control, 29-140cc/rev.	250-280	Variable	29-140cc/rev.	AS170
Variable Displacement	PVC	Axial piston, mechanical control, 15-23cc/rev.	210	Variable	15-23cc/rev.	TA165
Variable & Fixed Displacement	PVP-CX2E	Axial piston, various controls, 29-90cc/rev. - 10.5-150, single body	280-350	Variable	29-90cc/rev. - 10.5-150cc/rev.	A190

Atos - Standard valves

ATOS - STANDARD VALVES 214
ATOS - PROPORTIONAL VALVES 222
ATOS - SAFETY 228
ATOS - EXPLOSION PROOF 222
ATOS - EXPLOSION PROOF - STAINLESS 241

Type	Heading / Type / Mounting / Format	Part number	Description	Pressure (bar)	Flow (lpm)	Size	ATOS Catalogue Page
Directional	Cetop subplate mounted	DHE	Directional valve, direct acting, spool, auxilliary hand lever option	350	80	06	E015
Directional	Cetop subplate mounted	DKE	Directional valve, direct acting	350	150	10	E025
Directional	Cetop subplate mounted	DPHE	Directional valve, pilot operated	350	160-999	10, 16, 25, 32	E085
Directional	Cetop subplate mounted	DHL	Directional valve, direct acting, compact	350	60	06	E018
Directional	Cetop subplate mounted	DHEP	Directional valve, direct acting	420	80	06	TE030
Directional	Cetop subplate mounted	DKEP	Directional valve, direct acting	420	150	10	TE035
Directional	Cetop subplate mounted	SDHL8	Directional valve, direct acting, compact, low leakage	350	30	06	TE050
Directional	Cetop subplate mounted	DHO/8W	Directional valve, direct acting, spool, low power consumption	210	40	06	TE015
Directional	Cetop subplate mounted	DHE/15W	Directional valve, direct acting, spool, low power consumption	250	50	06	TE015

Type	Heading / Type / Mounting / Format	Part number	Description	Pressure (bar)	Flow (lpm)	Size	ATOS Catalogue Page
Directional	Cartridge	LIDEW	Directional valve, 2 way, optional direct acting pilot spool, pilot operated poppet main stage	350-420	240-9000	16-100	H030
Directional	Cartridge	LIDBH	Directional valve, 2 way, optional direct acting pilot spool with shuttle, pilot operated poppet main stage	350-420	240-9000	16-100	H030
Directional	Cartridge	LIDAS	Directional valve, 2 way, pilot operated poppet main stage	350-420	200-2100	16-50	H050
Directional	Cartridge	LIDASH	Directional valve, 2 way, direct acting pilot spool, pilot operated poppet main stage	350-420	200-2100	16-50	H050

Type	Heading / Type / Mounting / Format	Part number	Description	Pressure (bar)	Flow (lpm)	Size	ATOS Catalogue Page
Directional	Cetop sandwich module	HF	Directional valve, direct acting, service line control	350	60	06	EY050
Directional	Cetop sandwich module	HD	Directional valve, direct acting, parallel directional control	350	60	06	TD020

Type	Heading / Type / Mounting / Format	Part number	Description	Pressure (bar)	Flow (lpm)	Size	ATOS Catalogue Page
Directional	Cetop subplate mounted	DH-04	Directional valve, hydraulically operated, single actuator	350	50	06	E225
Directional	Cetop subplate mounted	DH-05	Directional valve, hydraulically operated, double actuator	350	50	06	E225
Directional	Cetop subplate mounted	DK-14	Directional valve, hydraulically operated, single actuator	315	160	10	E225
Directional	Cetop subplate mounted	DK-15	Directional valve, hydraulically operated, double actuator	315	160	10	E225
Directional	Cetop subplate mounted	DP-14	Directional valve, hydraulically operated, single actuator	350	160	10	E225
Directional	Cetop subplate mounted	DP-15	Directional valve, hydraulically operated, double actuator	350	160	10	E225
Directional	Cetop subplate mounted	DP-24	Directional valve, hydraulically operated, single actuator	350	300	16	E225
Directional	Cetop subplate mounted	DP-25	Directional valve, hydraulically operated, double actuator	350	300	16	E225
Directional	Cetop subplate mounted	DP-44	Directional valve, hydraulically operated, single actuator	350	700	25	E225
Directional	Cetop subplate mounted	DP-45	Directional valve, hydraulically operated, double actuator	350	700	25	E225
Directional	Cetop subplate mounted	DP-64	Directional valve, hydraulically operated, single actuator	350	1000	32	E225
Directional	Cetop subplate mounted	DP-65	Directional valve, hydraulically operated, double actuator	350	1000	32	E225
Directional	Cetop subplate mounted	DH-08	Directional valve, pneumatically operated, single actuator	350	50	06	E255
Directional	Cetop subplate mounted	DH-09	Directional valve, pneumatically operated, double actuator	350	50	06	E255
Directional	Cetop subplate mounted	DK-18	Directional valve, pneumatically operated, single actuator	315	160	10	E255
Directional	Cetop subplate mounted	DK-19	Directional valve, pneumatically operated, double actuator	315	160	10	E255
Directional	Cetop subplate mounted	DP-28	Directional valve, pneumatically operated, single actuator	350	300	16	E255
Directional	Cetop subplate mounted	DP-29	Directional valve, pneumatically operated, double actuator	350	300	16	E255
Directional	Cetop subplate mounted	DP-48	Directional valve, pneumatically operated, single actuator	350	700	25	E255
Directional	Cetop subplate mounted	DP-49	Directional valve, pneumatically operated, double actuator	350	700	25	E255
Directional	Cetop subplate mounted	DP-68	Directional valve, pneumatically operated, single actuator	350	1000	32	E255
Directional	Cetop subplate mounted	DP-69	Directional valve, pneumatically operated, double actuator	350	1000	32	E255

Type	Heading / Type / Mounting / Format	Part number	Description	Pressure (bar)	Flow (lpm)	Size	ATOS Catalogue Page
Directional	Cetop subplate mounted	DH-00	Directional valve, mechanically operated	350	50	06	E150
Directional	Cetop subplate mounted	DH-01	Directional valve, hand lever operated	350	50	06	E150
Directional	Cetop subplate mounted	DH-02	Directional valve, cam operated	350	50	06	E150
Directional	Cetop subplate mounted	DK-10	Directional valve, mechanically operated	315	100	10	E150
Directional	Cetop subplate mounted	DK-11	Directional valve, hand lever operated	315	100	10	E150
Directional	Cetop subplate mounted	DK-12	Directional valve, cam operated	315	140	10	E150
Directional	Cetop subplate mounted	DP-20	Directional valve, mechanically operated	350	300	16, 25	E150
Directional	Cetop subplate mounted	DP-21	Directional valve, hand lever operated	350	300	16, 25	E150
Directional	Cetop subplate mounted	DP-40	Directional valve, mechanically operated	350	700	16, 25	E150
Directional	Cetop subplate mounted	DP-41	Directional valve, hand lever operated	350	700	16, 25	E150

Type	Heading / Type / Mounting / Format	Part number	Description	Pressure (bar)	Flow (lpm)	Size	ATOS Catalogue Page
Relief	Cartridge	CART	Pressure relief, direct acting	230-500	2.5-120	G012, M35	C010
Relief	Cartridge	LIMM	Pressure relief, direct acting	420	180-4900	16	H010

Type	Heading / Type / Mounting / Format	Part number	Description	Pressure (bar)	Flow (lpm)	Size	ATOS Catalogue Page
Relief	Cetop sandwich module	HMP	Pressure relief, direct acting, single / dual	350	35	06	D120
Relief	Cetop sandwich module	HM	Pressure relief, pilot operated, single / dual	350	60	06	D120
Relief	Cetop sandwich module	KM	Pressure relief, pilot operated, single / dual	350	120	10	D120
Relief	Cetop sandwich module	HMU	Pressure relief, direct acting, pilot control only, single / dual, optional circuits	350	2.5	06	TD010

Type	Heading / Type / Mounting / Format	Part number	Description	Pressure (bar)	Flow (lpm)	Size	ATOS Catalogue Page
Relief	Line Mounted	ARAM	Pressure relief, pilot operated	350	350-500	G034, G114	C045
Relief	Line Mounted	REM	Pressure relief, pilot operated	350	200-601	SAE 3/4", 1", 1 1/4"	C073
Relief	Line Mounted	ARE	Pressure relief, direct acting	350-500	40-100	G014, G012	C020

Type	Heading / Type / Mounting / Format	Part number	Description	Pressure (bar)	Flow (lpm)	Size	ATOS Catalogue Page
Relief	Subplate mounted	AGAM	Pressure relief, pilot operated	350	200-600	10, 20, 32	C066

Type	Heading / Type / Mounting / Format	Part number	Description	Pressure (bar)	Flow (lpm)	Size	ATOS Catalogue Page
Reducing	Cartridge	LIRA	Pressure reducing valve, pilot operated	420	140-750	16	H010

Type	Heading / Type / Mounting / Format	Part number	Description	Pressure (bar)	Flow (lpm)	Size	ATOS Catalogue Page
Reducing	Cetop sandwich module	HG	Pressure reducing valve, pilot operated	350	50	06	D140
Reducing	Cetop sandwich module	KG	Pressure reducing valve, pilot operated	315	100	10	D140
Reducing	Cetop sandwich module	JPG	Pressure reducing valve, pilot operated	315	250-300	16, 25	D140
Reducing	Cetop sandwich module	RR-3	Pressure reducing valve, P-line, fixed setting, direct acting	350	4	06	TD010

Type	Heading / Type / Mounting / Format	Part number	Description	Pressure (bar)	Flow (lpm)	Size	ATOS Catalogue Page
Reducing	Subplate mounted	AGIR	Pressure reducing valve, pilot operated	350	160-400	10, 20, 32	C070

Type	Heading / Type / Mounting / Format	Part number	Description	Pressure (bar)	Flow (lpm)	Size	ATOS Catalogue Page
Compensator	Cartridge	LIC	Pressure compensator, bypass type for use with flow control	420	180-4900	16	H010

Type	Heading / Type / Mounting / Format	Part number	Description	Pressure (bar)	Flow (lpm)	Size	ATOS Catalogue Page
Compensator	Cetop sandwich module	HC	Pressure compensating module, restrictive type, including service line shuttle, 5-35 bar	350	50	06	D150
Compensator	Cetop sandwich module	KC	Pressure compensating module, restrictive type, including service line shuttle, 5-35 bar	350	100	10	D150
Compensator	Cetop sandwich module	JPC	Pressure compensating module, restrictive type, including service line shuttle, 5-35 bar	350	200	16	D150
Compensator	Cetop sandwich module	HC-031/8	Pressure compensating module, restrictive type, including service line shuttle, 8 bar fixed	350	34	06	TD010

Type	Heading / Type / Mounting / Format	Part number	Description	Pressure (bar)	Flow (lpm)	Size	ATOS Catalogue Page
Sequence	Cetop sandwich module	HS	Sequence valve, direct acting, spool	350	40	06	D130
Sequence	Cetop sandwich module	KS	Sequence valve, direct acting, spool	315	80	10	D130

Type	Heading / Type / Mounting / Format	Part number	Description	Pressure (bar)	Flow (lpm)	Size	ATOS Catalogue Page
Sequence	Subplate mounted	AGIS	Sequence valve, direct acting, spool	350	200-600	10, 20, 32	C070

Type	Heading / Type / Mounting / Format	Part number	Description	Pressure (bar)	Flow (lpm)	Size	ATOS Catalogue Page
Unloading	Subplate mounted	AGIU	Unloading valve, venting options	350	100-300	10, 20, 32	C070

Type	Heading / Type / Mounting / Format	Part number	Description	Pressure (bar)	Flow (lpm)	Size	ATOS Catalogue Page
Switching	Subplate mounted	MAP	Pressure switch, fixed switching differential	630	-	-	D250

Type	Heading / Type / Mounting / Format	Part number	Description	Pressure (bar)	Flow (lpm)	Size	ATOS Catalogue Page
Flow	Cetop sandwich module	HQ	Flow control, adjustable with reverse check, single/double, meter in/meter out	350	80	06	D160
Flow	Cetop sandwich module	KQ	Flow control, adjustable with reverse check, single/double, meter in/meter out	315	160	10	D160
Flow	Cetop sandwich module	JPQ	Flow control, adjustable with reverse check, single/double, meter in/meter out	350	200-300	16, 25	D160

Type	Heading / Type / Mounting / Format	Part number	Description	Pressure (bar)	Flow (lpm)	Size	ATOS Catalogue Page
Flow	Cetop subplate mounted	QV-06	Flow control, adjustable, pressure compensated, optional check valve	250	24	06	C210
Flow	Cetop subplate mounted	DHQ	Flow control, pressure compensated, 2 speed	250	36	06	D170

Type	Heading / Type / Mounting / Format	Part number	Description	Pressure (bar)	Flow (lpm)	Size	ATOS Catalogue Page
Flow	Line Mounted	AQFR	Flow control, adjustable with reverse check	350-400	30-250	G038-G114	C280

Type	Heading / Type / Mounting / Format	Part number	Description	Pressure (bar)	Flow (lpm)	Size	ATOS Catalogue Page
Flow	Cartridge	QBF	Flow control, fixed, pressure compensated	350	1.5	G014	TC420
Flow	Cartridge	LIDD	Flow control, adjustable	420	240-4000	16-63	H020

Type	Heading / Type / Mounting / Format	Part number	Description	Pressure (bar)	Flow (lpm)	Size	ATOS Catalogue Page
Shuttle	Cartridge	CART B	Shuttle	350-420	5-15	10	TC420

Type	Heading / Type / Mounting / Format	Part number	Description	Pressure (bar)	Flow (lpm)	Size	ATOS Catalogue Page
Check	Cartridge	LIDO	Pilot to close, normaly open	420	160-1800	16-50	H040
Check	Cartridge	LIDA	Pilot to close, normaly closed	420	270-9000	16-50	H040
Check	Cartridge	LIDB	Pilot to close, normaly closed, with shuttle for pilot selection	420	270-4000	16-63	H040
Check	Cartridge	LIDR	Pilot to close, normaly closed, with hydraulically operated P.O. check	420	550-4000	16-63	H040
Check	Cartridge	DB	Check insert	350	25-85	G014-G012	C400
Check	Cartridge	DR	Check insert	350	35-95	G014-G012	C400
Check	Cartridge	CART D-5	Check, suitable for pilot lines	350	5	M8	C010

Type	Heading / Type / Mounting / Format	Part number	Description	Pressure (bar)	Flow (lpm)	Size	ATOS Catalogue Page
Check	Cetop sandwich module	HR	Pilot operated check, single / dual	350	60	06	D180
Check	Cetop sandwich module	KR	Pilot operated check, single / dual	315	120	10	D180
Check	Cetop sandwich module	JPR	Pilot operated check, single / dual	350	200-300	16, 25	D180

Type	Heading / Type / Mounting / Format	Part number	Description	Pressure (bar)	Flow (lpm)	Size	ATOS Catalogue Page
Check	Line Mounted	ADR	Check	350-400	40-500	G014-G114	C406
Check	Line Mounted	ADRL	Pilot operated check, single	350-400	30-300	G038-G114	C450
Check	Line Mounted	020275 ADR-10	Check, calibrated orifice	400	80	G038	TC410

Type	Heading / Type / Mounting / Format	Part number	Description	Pressure (bar)	Flow (lpm)	Size	ATOS Catalogue Page
Check	Subplate mounted	AGRL	Pilot operated check, single, decompression, optional vent	315	160-500	10, 20, 32	C450

Type	Heading / Type / Mounting / Format	Part number	Description	Pressure (bar)	Flow (lpm)	Size	ATOS Catalogue Page
Directional	Cetop subplate mounted	DHZE-A	Proportional directional, without transducer, direct acting, positive overlap, cURus certified solenoids, Optional fieldbus	350	70	06	F150
Directional	Cetop subplate mounted	DKZE-A	Proportional directional, without transducer, direct acting, positive overlap, cURus certified solenoids, Optional fieldbus	315	160	10	F150
Directional	Cetop subplate mounted	DHZO-A	Proportional directional, without transducer, direct acting, positive overlap, cURus certified solenoids, Optional on board drivers, Optional fieldbus	350	70	06	FS160
Directional	Cetop subplate mounted	DKZOR-A	Proportional directional, without transducer, direct acting, positive overlap, cURus certified solenoids, Optional on board drivers, Optional fieldbus	315	160	10	FS160
Directional	Cetop subplate mounted	DHZO-A-060	Proportional directional, without transducer, direct acting, zero overlap, 3 positions, single solenoid	350	28	06	TF050
Directional	Cetop subplate mounted	DHZEM-A	Proportional directional, without transducer, pilot operated, positive overlap, high flow	350	140	06	TF100
Directional	Cetop subplate mounted	DPZO-A	Proportional directional, without transducer, pilot operated, positive overlap, Optional fieldbus	350	180-1500	10-32	FS170
Directional	Cetop subplate mounted	DPZO-T	Proportional directional, with LVDT transducer, pilot operated, positive overlap, Optional fieldbus & safety functions	350	180-1500	10-32	FS172
Directional	Cetop subplate mounted	DHZO-T	Proportional directional, high performance, without transducer, direct acting, positive overlap, cURus certified solenoids, Optional on board drivers, Optional fieldbus, P/Q & safety functions	350	80	06	FS168
Directional	Cetop subplate mounted	DKZOR-T	Proportional directional, high performance, without transducer, direct acting, positive overlap, cURus certified solenoids, Optional on board drivers	315	170	10	FS165

Type	Heading / Type / Mounting / Format	Part number	Description	Pressure (bar)	Flow (lpm)	Size	ATOS Catalogue Page
Directional	Cartridge	LIQZO-T	Proportional 2 way flow control with LVDT transducer	350	600-2500	16-40	TF325
Directional	Cartridge	LIQZP-T	Proportional 2 way flow control with LVDT transducer	420	4000-10000	50-80	TF325
Directional	Cartridge	LIQZO-L	Proportional 2 way flow control with 2x LVDT transducer & on board drivers	350	600-2500	16-100	FS330
Directional	Cartridge	LIQZP-L	Proportional 2 way flow control with 2 x LVDT transducer & on board drivers	420	4000-16000	100	F330

Type	Heading / Type / Mounting / Format	Part number	Description	Pressure (bar)	Flow (lpm)	Size	ATOS Catalogue Page
Directional	Cartridge	LIQZO-L	Servoproporitonal 3 way flow control with 2 x transducer, pilot operated, optional on board drivers, optional field-bus, P/Q & safety functions	350	500-1050	25-40	F340
Directional	Cartridge	LIQZP-L	Servoproporitonal 3 way flow control with 2 x transducer, pilot operated, optional on board drivers, optional field-bus, P/Q & safety functions	420	2000-5000	50-80	F340
Directional	Cartridge	LIQZH-L	Servoproporitonal 2 way flow control, high response with 2 x transducer, pilot operated, on board drivers, optional fieldbus	420	1800-16000	32-100	TFS330

Type	Heading / Type / Mounting / Format	Part number	Description	Pressure (bar)	Flow (lpm)	Size	ATOS Catalogue Page
Directional	Cetop subplate mounted	DPZO-L	Proportional directional, with 2 x LVDT transducer, pilot operated, positive overlap, Optional fieldbus & safety functions	350	180-3500	10-35	FS175
Directional	Cetop subplate mounted	DHZO-T	Servoproporitonal directional with LVDT transducer, direct acting, zero overlap, optional on board drivers, optional fieldbus, P/Q & safety functions	350	80	06	FS165
Directional	Cetop subplate mounted	DKZOR-T	Servoproporitonal directional with LVDT transducer, direct acting, zero overlap, optional on board drivers, optional fieldbus, P/Q & safety functions	315	180	10	FS165
Directional	Cetop subplate mounted	DLHZO-T	Servoproporitonal directional with LVDT transducer, direct acting, sleeve, zero overlap, optional on board drivers, optional fieldbus, P/Q & safety functions	350	70	06	F180
Directional	Cetop subplate mounted	DLKZOR-T	Servoproporitonal directional with LVDT transducer, direct acting, sleeve, zero overlap, optional on board drivers, optional fieldbus, P/Q & safety functions	315	160	10	F180
Directional	Cetop subplate mounted	DPZO-L	Servoproporitonal directional with 2 x LVDT transducer, pilot operated, zero overlap, optional on board drivers, optional fieldbus, P/Q & safety functions	350	180-3500	10-35	F175
Directional	Cetop subplate mounted	DLHZO-TEZ	Proportional directional with transducer, direct acting, sleeve, zero overlap, on board digital axis controller with optional fieldbus, P/Q & safety functions	350	70	6	FS610
Directional	Cetop subplate mounted	DLKZOR-TEZ	Proportional directional with transducer, direct acting, sleeve, zero overlap, on board digital axis controller with optional fieldbus, P/Q & safety functions	315	160	10	FS610
Directional	Cetop subplate mounted	DHZO-TEZ	Proportional directional with transducer, direct acting, zero overlap, on board digital axis controller with optional fieldbus, P/Q & safety functions	350	80	6	FS620
Directional	Cetop subplate mounted	DKZOR-TEZ	Proportional directional with transducer, direct acting, zero overlap, on board digital axis controller with optional fieldbus, P/Q & safety functions	315	180	10	FS620
Directional	Cetop subplate mounted	DPZO-LEZ	Proportional directional with 2 x transducer, pilot oper-ated, zero overlap, on board digital axis controller with optional fieldbus, P/Q & safety functions	350	3500	10	FS630

Type	Heading / Type / Mounting / Format	Part number	Description	Pressure (bar)	Flow (lpm)	Size	ATOS Catalogue Page
Relief	Cartridge	CART-RZME-A	Proportional pressure relief without transducer, direct acting	350	4	06	F005
Relief	Cartridge	LIMZO-A	Proportional pressure relief without transducer, poppet type, optional fieldbus	300	200-4500	16-80	FS300
Relief	Cartridge	LIMZO-R	Proportional pressure relief with transducer, poppet type, optional fieldbus	350	200-4500	16-80	FS305

Type	Heading / Type / Mounting / Format	Part number	Description	Pressure (bar)	Flow (lpm)	Size	ATOS Catalogue Page
Relief	Cetop sandwich module	HZMO-A-030	Proportional pressure relief without transducer, spool type, optional fieldbus	350	40	06	FS065

Type	Heading / Type / Mounting / Format	Part number	Description	Pressure (bar)	Flow (lpm)	Size	ATOS Catalogue Page
Relief	Cetop subplate mounted	RZME-A	Proportional pressure relief without transducer, direct acting	350	4	06	F005
Relief	Cetop subplate mounted	RZMO-A-010	Proportional pressure relief without transducer, direct acting, optional fieldbus	350	4	06	FS007
Relief	Cetop subplate mounted	RZMO-A-030	Proportional pressure relief without transducer, spool type, optional fieldbus	350	40	06	FS065
Relief	Cetop subplate mounted	RZMO-A-010/500	Proportional pressure relief without transducer, direct acting, optional fieldbus	500	4	06	TF035
Relief	Cetop subplate mounted	RZMO-R-010	Proportional pressure relief with transducer, direct acting, optional fieldbus	350	4	06	FS010
Relief	Cetop subplate mounted	RZMO-R-030	Proportional pressure relief with transducer, spool type, optional fieldbus	350	40	06	FS067

Type	Heading / Type / Mounting / Format	Part number	Description	Pressure (bar)	Flow (lpm)	Size	ATOS Catalogue Page
Relief	Subplate mounted	AGMZE-A	Proportional pressure relief without transducer, poppet type, cURus certified solenoid	350	200-600	10, 20, 32	F030
Relief	Subplate mounted	AGMZO-A	Proportional pressure relief without transducer, poppet type, optional fieldbus	350	200-600	10, 20, 32	FS035
Relief	Subplate mounted	AGMZO-R	Proportional pressure relief with transducer, poppet type, optional fieldbus	350	200-600	10, 20, 32	FS040

Type	Heading / Type / Mounting / Format	Part number	Description	Pressure (bar)	Flow (lpm)	Size	ATOS Catalogue Page
Reducer	Cartridge	CART RZGE-A	Proportional pressure reducer without transducer, direct acting spool, cURus certified solenoid	210	4	6	F012
Reducer	Cartridge	LIRZO-A	Proportional pressure reducer without transducer, pop-pet type, optional fieldbus	350	160-800	16-40	FS300
Reducer	Cartridge	LIRZO-R	Proportional pressure reducer with transducer, spool type, optional on board drivers, optional fieldbus	350	160-800	16-40	FS305

Type	Heading / Type / Mounting / Format	Part number	Description	Pressure (bar)	Flow (lpm)	Size	ATOS Catalogue Page
Reducer	Cetop sandwich module	HZGO-A-031	Proportional pressure reducer without transducer, spool type	350	40	06	FS070
Reducer	Cetop sandwich module	KZGO-A-031	Proportional pressure reducer without transducer, spool type	350	100	10	FS070
Reducer	Cetop subplate mounted	RZGE-A	Proportional pressure reducer without transducer, direct acting spool, cURus certified solenoid	210	4	06	F012

Type	Heading / Type / Mounting / Format	Part number	Description	Pressure (bar)	Flow (lpm)	Size	ATOS Catalogue Page
Reducer	Cetop subplate mounted	RZGO-A-010	Proportional pressure reducer without transducer, direct acting spool, optional on board drivers, optional fieldbus	350	12	06	FS015
Reducer	Cetop subplate mounted	RZGO-A-033	Proportional pressure reducer without transducer, spool type, optional on board drivers, optional fieldbus	350	40	06	FS070
Reducer	Cetop subplate mounted	DHRZO-A	Proportional pressure reducer without transducer, pilot lines, 3 way direct acting spool type	315	24	06	FS025
Reducer	Cetop subplate mounted	DHRZE-A	Proportional pressure reducer without transducer, pilot lines, 3 way direct acting spool type, cURus certified solenoid	315	24	06	F022
Reducer	Cetop subplate mounted	RZGO-R-010	Proportional pressure reducer with transducer, direct acting spool, optional on board drivers, optional fieldbus	350	12	06	FS020
Reducer	Cetop subplate mounted	RZGO-R-033	Proportional pressure reducer with transducer, spool type, optional on board drivers, optional fieldbus	350	40	06	FS075

Type	Heading / Type / Mounting / Format	Part number	Description	Pressure (bar)	Flow (lpm)	Size	ATOS Catalogue Page
Reducer	Subplate mounted	AGRCZO-A	Proportional pressure reducer without transducer, spool type, optional fieldbus	350	160-300	10, 20	FS050
Reducer	Subplate mounted	AGRCZO-R	Proportional pressure reducer with transducer, spool type, optional on board drivers, optional fieldbus	350	160-300	10, 20	FS055

Type	Heading / Type / Mounting / Format	Part number	Description	Pressure (bar)	Flow (lpm)	Size	ATOS Catalogue Page
Compensator	Cartridge	LICZO-A	Proportional compensator without transducer, pilot operated, optional on board drivers, optional fieldbus	350	200-2000	16-50	FS300
Compensator	Cartridge	LICZO-R	Proportional compensator with transducer, pilot operated, optional on board drivers, optional fieldbus	350	200-2000	16-50	FS305

Type	Heading / Type / Mounting / Format	Part number	Description	Pressure (bar)	Flow (lpm)	Size	ATOS Catalogue Page
Flow	Cetop subplate mounted	QVHZO	Proportional flow, direct operated, 2/3 way pressure compensated, optional on board driver, optional fieldbus	210	45	06	FS410
Flow	Cetop subplate mounted	QVKZOR	Proportional flow, direct operated, 2/3 way pressure compensated, optional on board driver, optional fieldbus	210	90	10	FS410
Flow	Cetop subplate mounted	QVHZO-T	Proportional flow, direct operated with transducer, 2/3 way pressure compensated, optional on board driver, optional fieldbus	210	45	06	F412
Flow	Cetop subplate mounted	QVKZOR-T	Proportional flow, direct operated with transducer, 2/3 way pressure compensated, optional on board driver, optional fieldbus	210	90	10	F412
Flow	Cetop subplate mounted	QVHMZO	Proportional flow, direct operated, 2/3 way pressure compensated with P/Q control, optional on board driver, optional fieldbus	210	45	6	TF490
Flow	Cetop subplate mounted	QVKMZOR	Proportional flow, direct operated, 2/3 way pressure compensated with P/Q control, optional on board driver, optional fieldbus	210	90	10	TF490

Type	Format	Part number	Description	ATOS Catalogue number
Electronic Drivers	DIN 43650 (EN175301-803)	E-MI-AS-IR	Digital driver without transducer, single coil	G020
Electronic Drivers	DIN 43650 (EN175301-803)	E-MI-AC	Analogue driver without transducer, single coil	G010

Type	Format	Part number	Description	ATOS Catalogue number
Electronic Drivers	DIN rail, EN60715	E-BM-AS	Digital driver without transducer, single coil / double coil	G030
Electronic Drivers	DIN rail, EN60715	E-BM-AES	Digital driver without transducer, single coil / double coil, optional fieldbus	GS050
Electronic Drivers	DIN rail, EN60715	E-BM-RES	Digital driver for relief and reducing valves with integral pressure transducer	GS203
Electronic Drivers	DIN rail, EN60715	E-BM-TEB/LEB	Digital driver for directional and flow proportional valves with one or two LVDT transducers	GS230-2
Electronic Drivers	DIN rail, EN60715	E-BM-TES/LES	Digital driver for directional and flow proportional valves with one or two LVDT transducers with optional fieldbus and P/Q control	GS240
Electronic Drivers	DIN rail, EN60715	E-BM-TID/LID	Digital driver for directional and flow proportional valves with one or two LVDT transducers	GS235
Electronic Drivers	DIN rail, EN60715	Z-BM-TEZ/LEZ	Digital axis card with driver functionality for directional proportional valves with one or two LVDT transducers and with optional fieldbus and P/Q control	GS330
Electronic Drivers	DIN rail, EN60715	Z-BM-KZ	Digital axis card for position and force controls with optional fieldbus	GS340

Type	Type / Mounting / Format	Part number	Description	Pressure (bar)	Flow (lpm)	Size	Catalogue Page
Directional	Cartridge	JO-DL/FV	Safety normally closed 2 way, pilot operated, inductive position switch	350	40-300	ISO 08, 16	EY105
Directional	Cartridge	LIDA/FV	Safety cartridge, pilot operated, 2 way, poppet, with inductive position switch	350	200-1370	16-50	EY120
Directional	Cartridge	LIDAS/FV	Active safety cartridge, pilot operated, 2 way, poppet, with inductive position switch	350-420	200-1800	16-50	EY120
Directional	Cartridge	LIFI	Safety cartridge, pilot operated, 2 way, poppet, direct acting, with intermediate inductive proximity sensor element	420	200-1800	16-50	EY120

Type	Type / Mounting / Format	Part number	Description	Pressure (bar)	Flow (lpm)	Size	Catalogue Page
Directional	Cetop sandwich module	HF/FV	Safety directional valve with spool position monitoring	350	60	06	EY050
Directional	Cetop subplate mounted	DPZO-TES	Proportional directional, with LVDT transducer, pilot operated, positive overlap, Optional fieldbus & safety functions	350	180-1600	10	FS172
Directional	Cetop subplate mounted	DHZO-TES	Proportional directional, with LVDT transducer, direct acting, positive overlap, Optional fieldbus, P/Q control & safety functions	350	80	06	FS165
Directional	Cetop subplate mounted	DKZOR-TES	Proportional directional, with LVDT transducer, direct acting, positive overlap, Optional fieldbus, P/Q control & safety functions	315	170	10	FS165

Type	Type / Mounting / Format	Part number	Description	Pressure (bar)	Flow (lpm)	Size	Catalogue Page
Directional	Cetop subplate mounted	DPZO-LES	Proportional directional, with 2 x LVDT transducer, pilot operated, positive overlap, Optional fieldbus, P/Q control & safety functions	350	180-3500	10	FS175
Directional	Cetop subplate mounted	DHZO-TES	Servoproportional directional, with LVDT transducer, direct acting, zero overlap, Optional fieldbus, P/Q control & safety functions	350	80	06	FS165
Directional	Cetop subplate mounted	DKZOR-TES	Servoproportional directional, with LVDT transducer, direct acting, zero overlap, Optional fieldbus, P/Q control & safety functions	315	180	10	FS165
Directional	Cetop subplate mounted	DLHZO-TES	Servoproportional directional, with LVDT transducer, direct acting, sleeve, zero overlap, Optional fieldbus, P/Q control & safety functions	350	70	06	FS180

Type	Type / Mounting / Format	Part number	Description	Pressure (bar)	Flow (lpm)	Size	Catalogue Page
Directional	Cetop subplate mounted	DLZOR-TES	Servoproportional directional, with LVDT transducer, direct acting, sleeve, zero overlap, Optional fieldbus, P/Q control & safety functions	315	160	10	FS180
Directional	Cetop subplate mounted	DPZO-LES	Proportional directional, with 2 x LVDT transducer, pilot operated, zero overlap, Optional fieldbus, P/Q control & safety functions	180	1600	10	FS175
Directional	Cetop subplate mounted	DHZO-T	Proportional directional with transducer, direct acting, zero overlap, on board digital axis controller with optional fieldbus, P/Q & safety functions	350	80	06	F165
Directional	Cetop subplate mounted	DKZOR-T	Proportional directional with transducer, direct acting, zero overlap, on board digital axis controller with optional fieldbus, P/Q & safety functions	315	180	10	F165
Directional	Cetop subplate mounted	DLHZO-T	Proportional directional with transducer, direct acting, sleeve, zero overlap, on board digital axis controller with optional fieldbus, P/Q & safety functions	350	70	06	F180
Directional	Cetop subplate mounted	DLKZOR-T	Proportional directional with transducer, direct acting, sleeve, zero overlap, on board digital axis controller with optional fieldbus, P/Q & safety functions	315	160	10	F180
Directional	Cetop subplate mounted	DPZO-L	Proportional directional with transducer, pilot operated zero overlap, on board digital axis controller with optional fieldbus, P/Q & safety functions	350	180-3500	10	F175

Type	Type / Mounting / Format	Part number	Description	Pressure (bar)	Flow (lpm)	Size	Catalogue Page
Directional	Cetop subplate mounted	DHE/FV	Safety directional valve, direct acting, with spool position monitoring	350	80	06	EY010
Directional	Cetop subplate mounted	DKE/FV	Safety directional valve, direct acting, with spool position monitoring	350	150	10	EY010
Directional	Cetop subplate mounted	DPHE/FV	Safety directional valve, pilot operated, with spool position monitoring	350	160-701	10, 16, 25, 32	EY030

Type	Type / Mounting / Format	Part number	Description	Pressure (bar)	Flow (lpm)	Size	Catalogue Page
Directional	Cetop subplate mounted	13*105 DHE-0612/7/A/FV	Safety directional valve for press applications	350	50	06	TE112
Directional	Cetop subplate mounted	13*105 DKE-1612/7/A/FV	Safety directional valve for press applications	350	150	10	TE112
Directional	Cetop subplate mounted	13*105 DPHE-1612/7/A/FV	Safety directional valve for press applications	350	160-700	10, 16, 25	TE112

Note: * in the part number denotes the current revision

Type	Type / Mounting / Format	Part number	Description	Pressure (bar)	Flow (lpm)	Size	Catalogue Page
Directional	Cetop subplate mounted	DHE/FI	Safety directional valve, direct acting, with inductive proximity sensor	350	80	06	EY010
Directional	Cetop subplate mounted	DKE/FI	Safety directional valve, direct acting, with inductive proximity sensor	350	150	10	EY1010

Type	Type / Mounting / Format	Part number	Description	Pressure (bar)	Flow (lpm)	Size	Catalogue Page
Relief	Cartridge	CART	Pressure relief, direct acting, PED certified	350-420	2.5-150	G 1/2" / M35X 1,5	C010

Type	Type / Mounting / Format	Part number	Description	Pressure (bar)	Flow (lpm)	Size	Catalogue Page
Relief	Line Mounted	ARE	Pressure relief, direct acting, PED certified	420	60-100	G 1/4", G 1/2"	C020
Relief	Line Mounted	ARAM	Pressure relief, pilot operated, PED certified	350	350-500	G 3/4", G 1 1/4	C045

Type	Type / Mounting / Format	Part number	Description	Pressure (bar)	Flow (lpm)	Size	Catalogue Page
Relief	Subplate mounted	AGAM	Pressure relief, pilot operated, PED certified	350	200-600	10, 20, 32	C066

Atos - Explosion proof

Type	Heading / Type / Mounting / Format	Part number	Description	Pressure (bar)	Flow (lpm)	Size	ATOS Catalogue Page
Directional	Cetop subplate mounted	DHZA-A	Proportional directional, without transducer, direct acting, positive overlap, multi certification	350	60	06	FX100
Directional	Cetop subplate mounted	DKZA-A	Proportional directional, without transducer, direct acting, positive overlap, multi certification	315	120	10	FX100
Directional	Cetop subplate mounted	DHZA-AES	Proportional directional, without transducer, direct acting, positive overlap, On board drivers, Optional fieldbus, multi-certification	350	60	06	FX110
Directional	Cetop subplate mounted	DKZA-AES	Proportional directional, without transducer, direct acting, positive overlap, On board drivers, Optional fieldbus, multi-certification	315	120	10	FX110
Directional	Cetop subplate mounted	DPZA-A	Proportional directional, without transducer, pilot operated, positive overlap, multi certification	350	180-1500	10	FX200
Directional	Cetop subplate mounted	DPZA-AES	Proportional directional, without transducer, pilot operated, positive overlap, On board drivers, Optional fieldbus, multi certification	350	180-1500	10	FX210

Type	Heading / Type / Mounting / Format	Part number	Description	Pressure (bar)	Flow (lpm)	Size	ATOS Catalogue Page
Directional	Cetop subplate mounted	DPZA-T	Proportional directional, with LVDT transducer, pilot operated, positive overlap, On board drivers, Optional fieldbus, multi certification	350	180-1000	10	FX220
Directional	Cetop subplate mounted	DHZA-T	Proportional directional, with LVDT transducer, direct acting, positive overlap, multi certification	350	60	06	FX120
Directional	Cetop subplate mounted	DKZA-T	Proportional directional, with LVDT transducer, direct acting, positive overlap, multi certification	315	150	10	FX120
Directional	Cetop subplate mounted	DHZA-TES	Proportional directional, with LVDT transducer, direct acting, positive overlap, On board drivers, Optional fieldbus & P/Q control, multi certification	350	60	06	FX130
Directional	Cetop subplate mounted	DKZA-TES	Proportional directional, with LVDT transducer, direct acting, positive overlap, On board drivers, Optional fieldbus & P/Q control, multi certification	315	150	10	FX130
Directional	Cetop subplate mounted	DPZA-LES	Proportional directional, with 2 x LVDT transducer, pilot operated, positive overlap, On board drivers, Optional fieldbus & P/Q control, multi certification	350	180-800	10	FX230

Atos - Explosion proof

Type	Heading / Type / Mounting / Format	Part number	Description	Pressure (bar)	Flow (lpm)	Size	ATOS Catalogue Page
Directional	Cetop subplate mounted	DHZA-TES	Servoproporitonal directional with transducer, direct acting, zero overlap, on board drivers, optional fieldbus, P/Q functions, multi-certification	350	60	06	FX135
Directional	Cetop subplate mounted	DKZA-TES	Servoproporitonal directional with transducer, direct acting, zero overlap, on board drivers, optional fieldbus, P/Q functions, multi-certification	315	150	10	FX130
Directional	Cetop subplate mounted	DLHZA-T	Servoproporitonal directional with transducer, direct acting, sleeve, zero overlap, multi-certification	350	50	06	FX140
Directional	Cetop subplate mounted	DLKZA-T	Servoproporitonal directional with transducer, direct acting, sleeve, zero overlap, multi-certification	315	100	10	FX140
Directional	Cetop subplate mounted	DLHZA-TES	Servoproporitonal directional with transducer, direct acting, sleeve, zero overlap, on board drivers, optional fieldbus, P/Q functions, multi-certification	350	50	06	FX150
Directional	Cetop subplate mounted	DLKZA-TES	Servoproporitonal directional with transducer, direct acting, sleeve, zero overlap, on board drivers, optional fieldbus, P/Q functions, multi-certification	315	100	10	FX150
Directional	Cetop subplate mounted	DPZA-LES	Servoproporitonal directional with 2 x LVDT transducer, pilot operated, zero overlap, On board drivers, Optional fieldbus & P/Q control, multi certification	350	180-800	10	FX230
Directional	Cetop subplate mounted	DHZA-TEZ	Servoproportional directional with transducer, direct acting, zero overlap, on board digital axis controller with optional fieldbus, P/Q & safety functions, multi certification	350	60	06	FX620
Directional	Cetop subplate mounted	DKZA-TEZ	Servoproportional directional with transducer, direct acting, zero overlap, on board digital axis controller with optional fieldbus, P/Q & safety functions, multi certification	315	150	10	FX620
Directional	Cetop subplate mounted	DLHZA-TEZ	Servoproportional directional with transducer, direct acting, sleeve, zero overlap, on board digital axis controller with optional fieldbus, P/Q & safety functions, multi certification	350	50	06	FX610
Directional	Cetop subplate mounted	DLKZA-TEZ	Servoproportional directional with transducer, direct acting, sleeve, zero overlap, on board digital axis controller with optional fieldbus, P/Q & safety functions, multi certification	315	100	10	FX610
Directional	Cetop subplate mounted	DPZA-LEZ	Servoproportional directional with transducer, pilot operated, zero overlap, on board digital axis controller with optional fieldbus, P/Q & safety functions, multi certification	350	180-800	10	FX630

Atos - Explosion proof

Type	Heading / Type / Mounting / Format	Part number	Description	Pressure (bar)	Flow (lpm)	Size	ATOS Catalogue Page
Directional	Cetop subplate mounted	DHA	Directional spool valve, direct acting, multi certification	350	70	06	EX010
Directional	Cetop subplate mounted	DHW	Intrinsically safe directional spool valve, direct acting, multi certification	350	25	06	EX100
Directional	Cetop subplate mounted	DPHA	Directional spool valve, pilot operated, multi certification	350	160-1000	10	EX030
Directional	Cetop subplate mounted	DPHW	Intrinisically safe directional spool valve, pilot operated, multi certification	350	160-700	10	EX130
Directional	Cetop subplate mounted	00*290 DHA	Directional spool valve with internal suppression diode, direct acting, multi certification	350	50	06	TE140

Type	Heading / Type / Mounting / Format	Part number	Description	Pressure (bar)	Flow (lpm)	Size	ATOS Catalogue Page
Directional	Cetop subplate mounted	00*290 DLAH	Directional poppet valve with internal suppression diode, direct acting, multi certification	350	12	06	TE140
Directional	Cetop subplate mounted	00*290 DLAHM	Directional poppet valve with internal suppression diode, direct acting, multi certification	250	30	06	TE140
Directional	Cetop subplate mounted	DLAH	Directional poppet valve, direct acting, multi certification	350	12	06	EX020
Directional	Cetop subplate mounted	DLAHM	Directional poppet valve, direct acting, multi certification	250	30	06	EX020
Directional	Cetop subplate mounted	DLHPX	Directional poppet valve, hydraulically operated, stain-less, multi certification	315	40	06	E135
Directional	Cetop subplate mounted	DLWH	Intrinsically safe directional poppet valve, direct acting, leak free, optional 2w2p / 3w2p, multi certification	350	12	06	EX120

Note: * in the part number denotes the current revision

Atos - Explosion proof

Type	Heading / Type / Mounting / Format	Part number	Description	Pressure (bar)	Flow (lpm)	Size	ATOS Catalogue Page
Directional	Cartridge	LIQZA-LES	Proportional 2 way flow control with 2 x LVDT transducer, pilot operated, On board drivers, Optional fieldbus, multi certification	420	1200-16000	100	FX360
Directional	Cartridge	LIQZA-L	Proportional 2 way flow control with 2 x LVDT transducer, pilot operated, multi certification	420	1200-16000	100	FX350
Directional	Cartridge	LIQZA-LES	Servoproportional 3 way flow control with 2 x LVDT transducer, pilot operated, On board drivers, Optional fieldbus & P/Q function, multi certification	420	500-5000	10	FX380
Directional	Cartridge	LIQZA-L	Servoproportional 3 way flow control with 2 x LVDT transducer, pilot operated, multi certification	420	500-5001	100	FX370

Type	Heading / Type / Mounting / Format	Part number	Description	Pressure (bar)	Flow (lpm)	Size	ATOS Catalogue Page
Directional	Cartridge	LIDEW-AO	Directional poppet valve, pilot operated, multi certification	350	240-4000	16-63	EX050
Directional	Cartridge	LIDBH-AO	Directional poppet valve, pilot operated with shuttle, multi certification	350	240-4000	16-63	EX050
Directional	Cartridge	LIDEW-WO	Intrinsically safe directional poppet valve, pilot operated, multi certification	350	240-4000	16-63	EX150
Directional	Cartridge	LIDBH-WO	Intrinsically safe directional poppet valve, pilot operated with shuttle, multi certification	350	240-4000	16-63	EX150

Type	Heading / Type / Mounting / Format	Part number	Description	Pressure (bar)	Flow (lpm)	Size	ATOS Catalogue Page
Relief	Cartridge	LIMZA-A	Proportional pressure relief without transducer, pilot operated, multi-certification	315	200-4500	16	FX300
Relief	Cartridge	LIMZA-AES	Proportional pressure relief without transducer, pilot operated, optional fieldbus, multi-certification	315	200-4500	16	FX310
Relief	Cartridge	LIMZA-RES	Proportional pressure relief with transducer, pilot operated, optional fieldbus, multi-certification	315	200-4500	16	FX320

Type	Heading / Type / Mounting / Format	Part number	Description	Pressure (bar)	Flow (lpm)	Size	ATOS Catalogue Page
Relief	Cetop sandwich module	HZMA-A	Proportional pressure relief without transducer, spool type, multi-certification	315	40	06	FX010

Type	Heading / Type / Mounting / Format	Part number	Description	Pressure (bar)	Flow (lpm)	Size	ATOS Catalogue Page
Relief	Cetop subplate mounted	RZMA-A	Proportional pressure relief without transducer, spool type, multi-certification	315	4-40	06	FX010
Relief	Cetop subplate mounted	RZMA-AES	Proportional pressure relief without transducer, direct acting / pilot operated options, optional fieldbus, multi-certification	315	4-40	06	FX020
Relief	Cetop subplate mounted	RZMA-RES	Proportional pressure relief with transducer, direct acting / pilot operated options, optional fieldbus, ATEX certification	315	4-40	06	FX030

Type	Heading / Type / Mounting / Format	Part number	Description	Pressure (bar)	Flow (lpm)	Size	ATOS Catalogue Page
Relief	Subplate mounted	AGMZA-A	Proportional pressure relief without transducer, poppet type, multi-certification	315	200-600	06	FX010
Relief	Subplate mounted	AGMZA-AES	Proportional pressure relief without transducer, poppet type, optional fieldbus, multi-certification	315	200-600	10	FX020
Relief	Subplate mounted	AGMZA-RES	Proportional pressure relief with transducer, poppet type, optional fieldbus, ATEX certification	315	200-600	10	FX030

Type	Heading / Type / Mounting / Format	Part number	Description	Pressure (bar)	Flow (lpm)	Size	ATOS Catalogue Page
Relief	Line Mounted	ARAM-AO	Pressure relief, pilot operated with DHA valve for venting / multi pressure selection, multi-certification	350	350-500	20, 32	CX010
Relief	Line Mounted	ARAM-WO	Intrinsically safe, pressure relief, pilot operated with DHW valve for venting / multi pressure selection, multi-certification	350	350-500	20, 32	CX030

Type	Heading / Type / Mounting / Format	Part number	Description	Pressure (bar)	Flow (lpm)	Size	ATOS Catalogue Page
Relief	Subplate mounted	AGAM-AO	Pressure relief, pilot operated with DHA valve for venting / multi pressure selection, multi-certification	350	200-600	10, 20, 32	CX010
Relief	Subplate mounted	AGAM-WO	Intrinsically safe, pressure relief, pilot operated with DHW valve for venting / multi pressure selection, multi-certification	350	200-600	10, 20, 32	CX030

Type	Heading / Type / Mounting / Format	Part number	Description	Pressure (bar)	Flow (lpm)	Size	ATOS Catalogue Page
Reducer	Cartridge	LIRZA-A	Proportional pressure reducer without transducer, pilot operated, multi-certification	315	160-800	16	FX300
Reducer	Cartridge	LIRZA-AES	Proportional pressure reducer without transducer, pilot operated, optional fieldbus, multi-certification	315	160-800	16	FX310
Reducer	Cartridge	LIRZA-RES	Proportional pressure reducer with transducer, pilot operated, optional fieldbus, multi-certification	315	160-800	16	FX320

Type	Heading / Type / Mounting / Format	Part number	Description	Pressure (bar)	Flow (lpm)	Size	ATOS Catalogue Page
Reducer	Cetop sandwich module	HZGA-A	Proportional pressure reducer without transducer, spool type, multi-certification	315	40	06	FX040
Reducer	Cetop sandwich module	KZGA-A	Proportional pressure reducer without transducer, spool type, multi-certification	315	100	10	FX040

Type	Heading / Type / Mounting / Format	Part number	Description	Pressure (bar)	Flow (lpm)	Size	ATOS Catalogue Page
Reducer	Cetop subplate mounted	RZGA-A	Proportional pressure reducer without transducer, spool type, directing / pilot operated, multi-certification	315	4-40	06	FX040
Reducer	Cetop subplate mounted	RZGA-AES	Proportional pressure reducer without transducer, spool type, directing operated, optional fieldbus, multi-certification	315	12-40	06	FX050
Reducer	Cetop subplate mounted	RZGA-RES	Proportional pressure reducer with transducer, spool type, directing operated, optional fieldbus, ATEX certification	315	12-40	06	FX060
Reducer	Cetop subplate mounted	DHRZA-A	Proportional pressure reducer without transducer, pilot lines, 3 way direct acting spool type, multi-certification	315	24	06	FX070
Reducer	Cetop subplate mounted	DHRZA-AES	Proportional pressure reducer without transducer, pilot lines, 3 way direct acting spool type, optional fieldbus, multi-certification	315	24	06	FX080

Type	Heading / Type / Mounting / Format	Part number	Description	Pressure (bar)	Flow (lpm)	Size	ATOS Catalogue Page
Reducer	Subplate mounted	AGRCZA-A	Proportional pressure reducer without transducer, spool type, multi-certification	315	160-300	10	FX040
Reducer	Subplate mounted	AGRCZA-AES	Proportional pressure reducer without transducer, spool type, pilot operated, optional fieldbus, multi-certification	315	160-300	10	FX050
Reducer	Subplate mounted	AGRCZA-RES	Proportional pressure reducer with transducer, spool type, pilot operated, optional fieldbus, ATEX certification	315	160-300	10	FX060

Type	Heading / Type / Mounting / Format	Part number	Description	Pressure (bar)	Flow (lpm)	Size	ATOS Catalogue Page
Compensator	Cartridge	LICZA-A	Proportional compensator without transducer, pilot operated, multi-certification	250	2	16	FX300
Compensator	Cartridge	LICZA-AES	Proportional compensator without transducer, pilot operated, optional fieldbus, multi-certification	250	200-2000	16	FX310
Compensator	Cartridge	LICZA-RES	Proportional compensator with transducer, pilot operated, optional fieldbus, multi-certification	250	200-2000	16	FX320

Type	Heading / Type / Mounting / Format	Part number	Description	Pressure (bar)	Flow (lpm)	Size	ATOS Catalogue Page
Flow	Cetop subplate mounted	QVHZA-A	Proportional flow, without transducer, direct operated, 2/3 way pressure compensated, multi-certification	210	45	06	FX400
Flow	Cetop subplate mounted	QVKZA-A	Proportional flow, without transducer, direct operated, 2/3 way pressure compensated, multi-certification	210	90	10	FX400
Flow	Cetop subplate mounted	QVHZA-AES	Proportional flow, without transducer, direct operated, 2/3 way pressure compensated, on board driver with optional fieldbus multi-certification	210	45	06	FX410
Flow	Cetop subplate mounted	QVKZA-AES	Proportional flow, without transducer, direct operated, 2/3 way pressure compensated, on board driver with optional fieldbus multi-certification	210	90	10	FX410
Flow	Cetop subplate mounted	QVHZA-T	Proportional flow, with transducer, direct operated, 2/3 way pressure compensated, multi-certification	210	45	06	FX420
Flow	Cetop subplate mounted	QVKZA-T	Proportional flow, with transducer, direct operated, 2/3 way pressure compensated, multi-certification	210	90	10	FX420
Flow	Cetop subplate mounted	QVHZA-TES	Proportional flow, with transducer, direct operated, 2/3 way pressure compensated, on board driver with optional fieldbus multi-certification	210	45	06	FX430
Flow	Cetop subplate mounted	QVKZA-TES	Proportional flow, with transducer, direct operated, 2/3 way pressure compensated, on board driver with optional fieldbus multi-certification	210	90	10	FX430

Atos - Explosion proof - Stainless

Type	Type / Mounting / Format	Part number	Description	Pressure (bar)	Flow (lpm)	Size	Catalogue Page
Directional **EX**	Cetop subplate mounted	DHAX	Explosion proof directional spool valve, direct acting, stainless, multi certification	350	60-70	06	EW010
Directional **EX**	Cetop subplate mounted	DLAHX	Explosion proof directional poppet valve, direct acting, stainless, multi certification	315-350	10	06	EW020
Directional **EX**	Cetop subplate mounted	DLAHMX	Explosion proof directional poppet valve, direct acting, stainless, multi certification	250-315	25-30	06	EW020
Directional **EX**	Cetop subplate mounted	DLAHPX	Explosion proof directional poppet valve, pilot operated, stainless, multi certification	315	40	06	EW050
Directional	Cetop subplate mounted	DLHPX	Directional poppet valve, hydraulically operated, stainless, multi certification	315	40	06	EW100
Directional **EX**	Subplate mounted	DLAPX	Explosion proof directional poppet valve, pilot operated, stainless, multi certification	315	220	non std.	EW050
Directional	Subplate mounted	DLPX	Directional poppet valve, hydraulically operated, stainless, multi certification	315	220	non std.	EW100

Type	Type / Mounting / Format	Part number	Description	Pressure (bar)	Flow (lpm)	Size	Catalogue Page
Relief	Cartridge	CART-MX	Pressure relief, direct acting, optional PED certification, multi-certification	420-500	2.5-60	G012, M33	CW010
Relief	Cartridge	CART-AREX	Pressure relief, direct acting, optional PED certification, multi-certification	400	150	M35	CW010

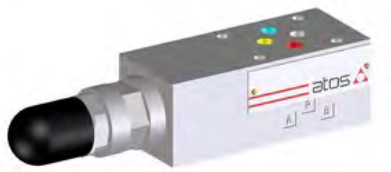

Type	Type / Mounting / Format	Part number	Description	Pressure (bar)	Flow (lpm)	Size	Catalogue Page
Relief	Cetop sandwich module	HMPX	Pressure relief, direct acting, multi-certification	350	40	06	DW010
Relief	Control cover	LIMMX	Pressure relief, direct acting, multi-certification	350	-	16-80	HW010

Hydrastore
Hydraulic Systems & Components

Online shop now open

Every stock item in this catalogue is now available online for next day delivery www.hydrastore.co.uk/shop

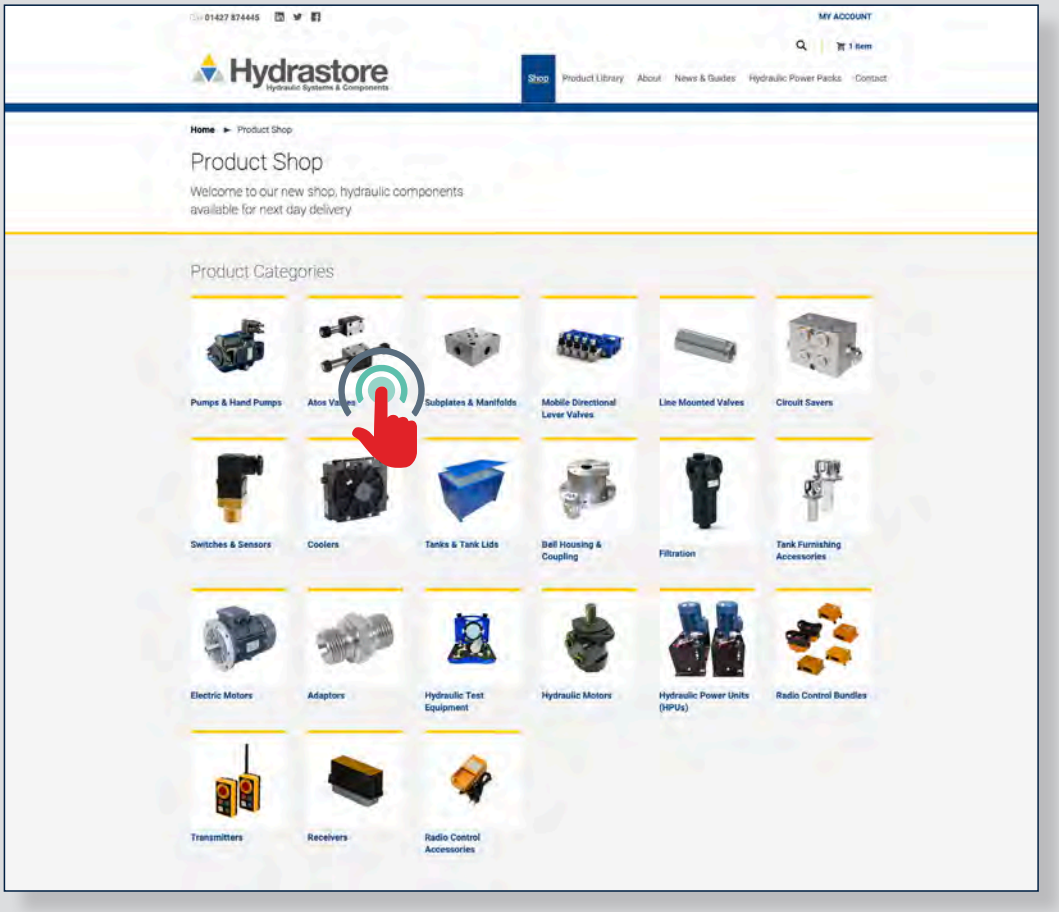

The main index menu is designed and categorised for quick and easy product selection...

Select 'Atos Valves'

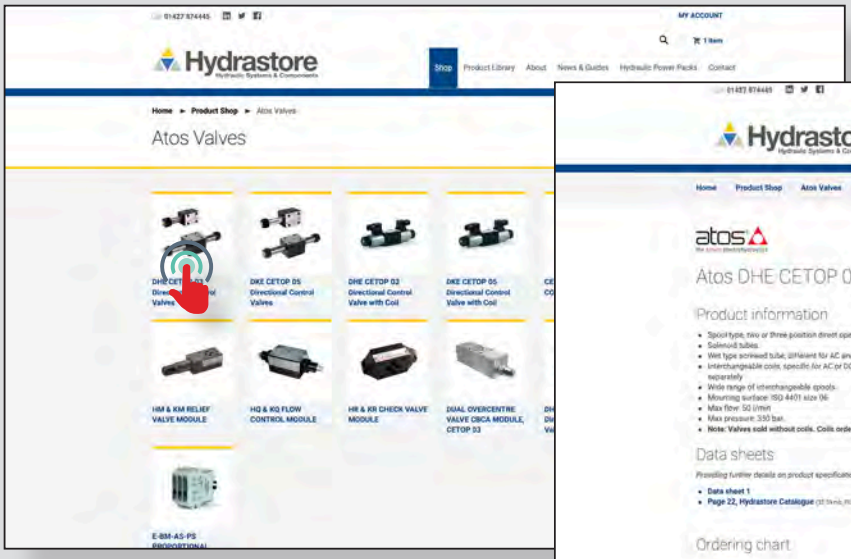

Select the item you need...

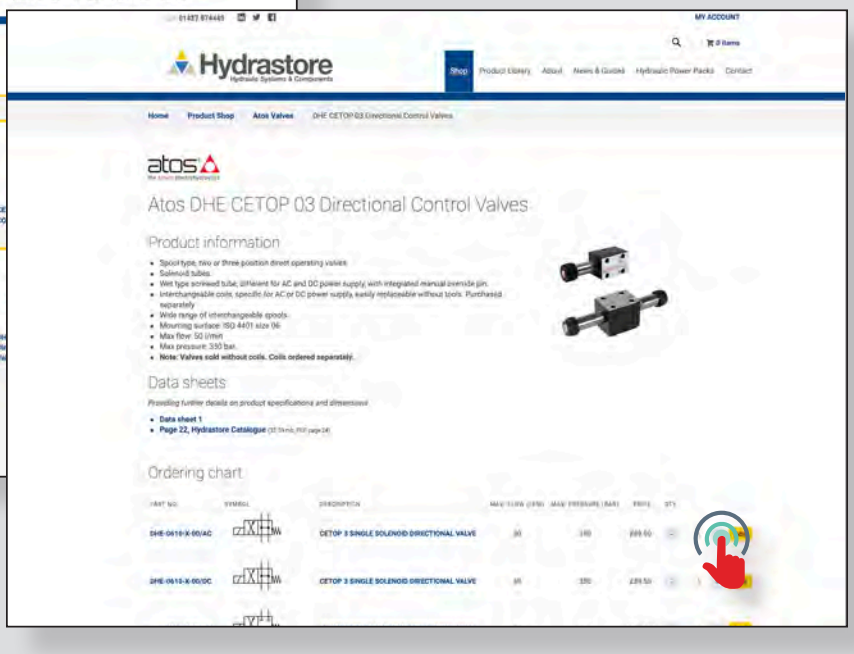

Select quantity from the options, add to basket, checkout, delivered!

Mobile directional valves overview

MONOBLOCK VALVES - HYDROCONTROL 244
PROPORTIONAL VALVES - DANFOSS 246
SECTIONAL VALVES - HYDROCONTROL 247
JOYSTICK CONTROLS 248
MULTI PORT DIVERTERS 248
FOOT PEDALS 248
PILOT SAFETY BLOCKS 248

MONOBLOCK VALVES

Hydrocontrol GMV15

Sections 2-4
Flow lit/min 15
Pressure bar 280
Spool pitch 28mm

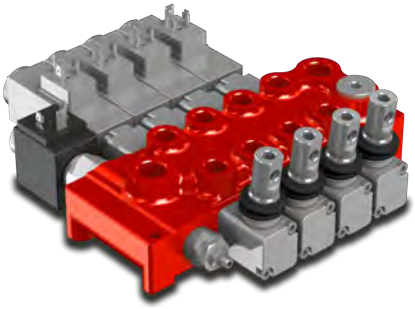

Hydrocontrol Q15

Sections 1
Flow lit/min 15
Pressure bar 250

Hydrocontrol Q25

Sections 1-8
Flow lit/min 30
Pressure bar 350
Spool pitch 38mm

Hydrocontrol Q30

Sections 1-10
Flow lit/min 30
Pressure bar 350
Spool pitch 38mm

Hydrocontrol Q35

Sections 1
Flow lit/min 40
Pressure bar 300

Hydrocontrol Q45

Sections 1-8
Flow lit/min 50
Pressure bar 350
Spool pitch 38mm

Hydrocontrol M45

Sections 1-6
Flow lit/min 45
Pressure bar 350
Spool pitch 35mm

Hydrocontrol M50

Sections 1-7
Flow lit/min 50
Pressure bar 350
Spool pitch 35mm

Hydrocontrol Q65

Sections 1
Flow lit/min 70
Pressure bar 350

Hydrocontrol Q75

Sections 1-6
Flow lit/min 80
Pressure bar 350
Spool pitch 46mm

Hydrocontrol Q95

Sections 1-6
Flow lit/min 100
Pressure bar 350
Spool pitch 46mm

PROPORTIONAL VALVES - DANFOSS

PVG 16 PROPORTIONAL VALVES

- Inlet flow is nominally 140 LPM but can be boosted to 230 LPM when used with mid-inlet sections.
- Up to 65 LPM working sections.
- Inlet 350 Bar max continuous pressure and 400 bar intermittent.
- Pre Compensated or non compensation options.
- 1 to 12 sections (Up to 14 sections if combined with PVG32)
- Can be combined with PVG32, 100, 128 and 256.

Note: Parts available on our webshop

PVG 32 PROPORTIONAL VALVES

- Inlet flow is nominally 140 LPM but can be boosted to 230 LPM when used with mid-inlet sections.
- Up to 125 LPM (non-compensated) and 100 LPM (compensated) working sections.
- Inlet 350 Bar max continuous pressure and 400 bar intermittent.
- Pre Compensated or non compensation options.
- 1 to 12 sections (Up to 14 sections if combined with PVG16)
- Can be combined with PVG16, 100, 128 and 256.

PVG 100 PROPORTIONAL VALVES

- Inlet flow nominally up to 250 LPM and 400 LPM when used with mid-inlet.
- Working sections nominally 180 LPM but by increasing delta P (15bar) can increase to 240 LPM.
- Inlet 350 Bar max continuous pressure and 400 bar intermittent.
- Post compensated flow sharing.
- 1 to 8 sections.
- Can be combined with PVG16, 32, 128 and 256.

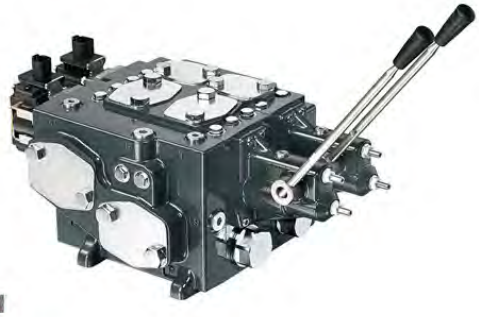

PVG 128/256

- Inlet flow up to 600 LPM
- working sections, 128 is up to 250 LPM and 256 is up to 450 LPM.
- Inlet 350 Bar max continuous pressure and 400 bar intermittent.
- Pre Compensated.
- 128 accommodates 1 to 9 sections, and the 256 accommodates 1 to 7.
- Can be combined with PVG16, 32, 100, 128 and 256.

PVG-EX

- PVG 32, 128 & 256 are all available with EX conformity.

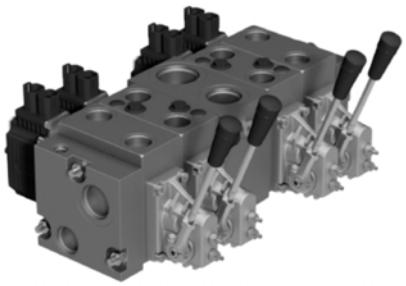

PVG 48 PROPORTIONAL VALVES

- Inlet flow for PVSI is 300 LPM and PVPM is 400 LPM.
- Up to 180 LPM working sections.
- Inlet 350 Bar max continuous pressure and 400 bar intermittent.
- Pre Compensated only
- 1 to 10 sections
- Can be combined with PVG 16, 32, 100, 128, 256

SECTIONAL VALVES - HYDROCONTROL

HC-D9
- Working section number: 1-12.
- Rated flow: 35 l/min
- Rated pressure: 350 bar.
- Spool pitch: 31 mm
- Applications: mini-excavator, mini backhoe loaders, skid-steer loaders, mini skid loaders, mini dumpers and forestry machine.

HC-D3M
- Working section number: 1-12.
- Rated flow: 55 l/min
- Rated pressure: 350 bar.
- Spool pitch: 38 mm.

HC-D6
- Working section number: 1-12.
- Rated flow: 80 l/min
- Rated pressure: 350 bar.
- Spool pitch 40 mm.
- Applications: backhoe loaders, wheel loaders, backhoes, compactor, hook and skip loaders and drilling machines.

HC-D16
- Working section number: 1-12.
- Rated flow: 150 l/min
- Rated pressure: 350 bar.
- Spool pitch: 46 mm.
- Applications: backhoe loaders, wheel loaders, backhoes compactor, hook and skip loaders and drilling machines.

HC-D20
- Working section number: 1-12.
- Rated flow: 250 l/min
- Rated pressure: 350 bar.
- Spool pitch: 64 mm.
- Applications: wheel loaders, truck cranes, drilling machines, sea platform cranes, presses, compactor, hook and skip loaders.

HC-D25
- Working section number: 1-12.
- Rated flow: 380 l/min
- Rated pressure: 350 bar.
- Spool pitch: 74 mm.
- Applications: sea platform cranes, presses, wheel loaders.

HC-D40
- Working section number: 1-10.
- Rated flow: 700 l/min
- Rated pressure: 350 bar.
- Spool pitch: 91 mm.
- Applications:
  Mini excavators, large excavators, forestry machines, cranes, aerial platforms, backhoe loaders, wheel loaders, drilling machines, compactors, hook and skip loaders and forklifts, truck cranes, sea platforms cranes, drilling machines and presses.

Hydrastore
Hydraulic Systems & Components

hydro control

JOYSTICK CONTROLS

HC-RCX
- Max pressure: 100 bar.
- Oil capacity: 12 l/min.
- Weight: 2,5 kg.
- Applications: mini-excavators, mini steer loaders, backhoe loaders, wheel loaders, tractors and boom mowers.

HC-RCM
- Working section number: 1-12.
- Max pressure: 60 bar.
- Oli capacity: 12 l/min.
- Weight: 1,5 kg.
- Tie roads clamping torque: 14 Nm.
- Applications: mini skid loaders, backhoe loaders and tractors.

HC-RCB
- Working section number: 2
- Max pressure: 60 bar.
- Oil capacity: 12 l/min.
- Weight: 3,2 kg.
- Tie rods clamping torque: 14 Nm.
- Applications: mini skid loaders, backhoe loaders and tractors.

FOOT PEDALS

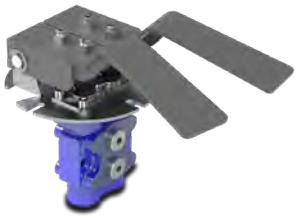

HC-RCD
- Max pressure: 60 bar.
- Oil capacity: 12 l/min.
- Weight: 3,2 kg.
- Applications: mini skid loaders and mini dumper.

HC-RCP
- Max pressure: 100 bar.
- Oil capacity: 12 l/min.
- Weight: 3,4 kg.
- Applications: mini-excavators.

HC-RCF
- Max pressure: 100 bar.
- Oil capacity: 12 l/min.
- Weight: 4,1 kg.
- Applications: mini-excavators.

MULTI PORT DIVERTERS

HC-SVM
- Max pressure: 350 bar
- Oil Capacity: up to 250 lpm
- Applications:

HC-SVE
- Max pressure: 350 bar
- Oil Capacity: up to 120 lpm
- Applications: Remote Pilot Control

PILOT SAFETY BLOCKS

HC-SU
- Max pressure: 350 bar
- Max pilot pressure 70 bar
- Oil Capacity: up to 8 lpm
- Applications:

HC-SE
- Max pressure: 350 bar
- Max pilot pressure 70 bar
- Oil Capacity: up to 8 lpm
- Applications:

Switches & Sensors overview

T200 / T201 – ANALOG PRESSURE TRANSDUCER 250
TT – ANALOG TEMPERATURE TRANSDUCER 250
SMA / SMF – HIGH PRESSURE SWITCH 250
SKBA / SKBF – LOW COST OEM PRESSURE SWITCH 250
S2TAF /S3TAF – HIGH AMP TEMPERATURE SWITCH 250
SDCA/SDCF – ROBUST PRESURE SWITCH 250

KAPS/KAPF – PRESSURE SWITCH 251
SKDF – COMPACT PRESSURE SWITCH 251
ULS – ULTRASONIC LEVEL SENSOR 251
TC – PRESSURE TRANSDUCER 251
S6TAF/S8TAF – TEMPERATURE SWITCH 251

T200 / T201 – ANALOG PRESSURE TRANSDUCER

- Accuracy• 0.5 % BFSL
- IP 67 rated protection
- Stainless steel enclosure
- Temperature compensated for extreme weather
- Output• 4-20 mA, 0.5-4.5 V, 0-10V
- More options available

TT – ANALOG TEMPERATURE TRANSDUCER

- Accuracy• 0.8% FS, 1% FS
- IP 65 rated protection
- Easy installation
- Electrical protection• overvoltage, short circuit, reverse polarity

SMA / SMF – HIGH PRESSURE SWITCH

- Proof pressure• 9000 psi
- IP 67 rated protection
- Pressure set point range• 10 to 5000 psi
- Ideal for hydraulic applications
- Adjustable and factory set options
- Offered with mobile and industrial connectors

SKBA / SKBF – LOW COST OEM PRESSURE SWITCH

- Proof pressure• 9000 psi
- IP 68 rated protection
- Pressure set point range• 3 to 5000 psi
- Ideal for OEM applications
- Cost-effective solutions
- Can be offered with a temperature compensated model

S2TAF /S3TAF – HIGH AMP TEMPERATURE SWITCH

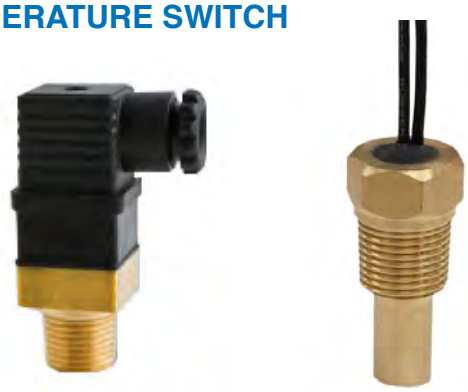

- Set point range 77F to 293F
- Differential 25F
- IP67 rated enclosure offered
- East to install

SDCA/SDCF – ROBUST PRESURE SWITCH

- Proof pressure 12,000 psi
- IP65 Rating
- Pressure set range 15-6000 psi
- Ideal for systems with high shock pressures
- Adjustable or factory set

KAPS/KAPF – PRESSURE SWITCH

- Proof pressure 15,000 psi
- IP67 Rating
- Pressure set range 350-3200 psi
- Ideal for applications with long cycle life
- Ind equipment, scissor lifts and cranes
- Adjustable or factory set

EPS PRESSURE SWITCH

- IP67
- Pressure set range -14.5 to 5800 psi
- Ideal for industrial equipment and safety monitoring
- Rotatable 350 degree digital display

SKDF – COMPACT PRESSURE SWITCH

- Proof pressure 9,000 psi
- IP67 Rating
- Pressure set range 15-5000 psi
- Ideal for mobile plant and machines
- Adjustable
- Std Deutsch connector

TC – PRESSURE TRANSDUCER

- IP67 Rating
- Pressure set range 1500-10,000 psi
- Ideal for Road maintenance machines and Cranes
- Temperature Compensated
- Stainless steel body
- Fatigue life 100,000,000 cycles

ULS – ULTRASONIC LEVEL SENSOR

- Range 200cm from surface
- Accuracy 0.5% of max distance
- Ultrasonic Frequency 112 khz
- Supply voltage 10-36VDC (100ma)
- Analog output 4-20ma
- IP65 Rating

S6TAF/S8TAF – TEMPERATURE SWITCH

- IP67 Rating
- Temp range 54-150 deg C
- Ideal for Oil reservoir temp
- Option for low or high differential
- Brass body

Hydrastore
Hydraulic Systems & Components

Online shop now open

Every stock item in this catalogue is now available online for next day delivery www.hydrastore.co.uk/shop

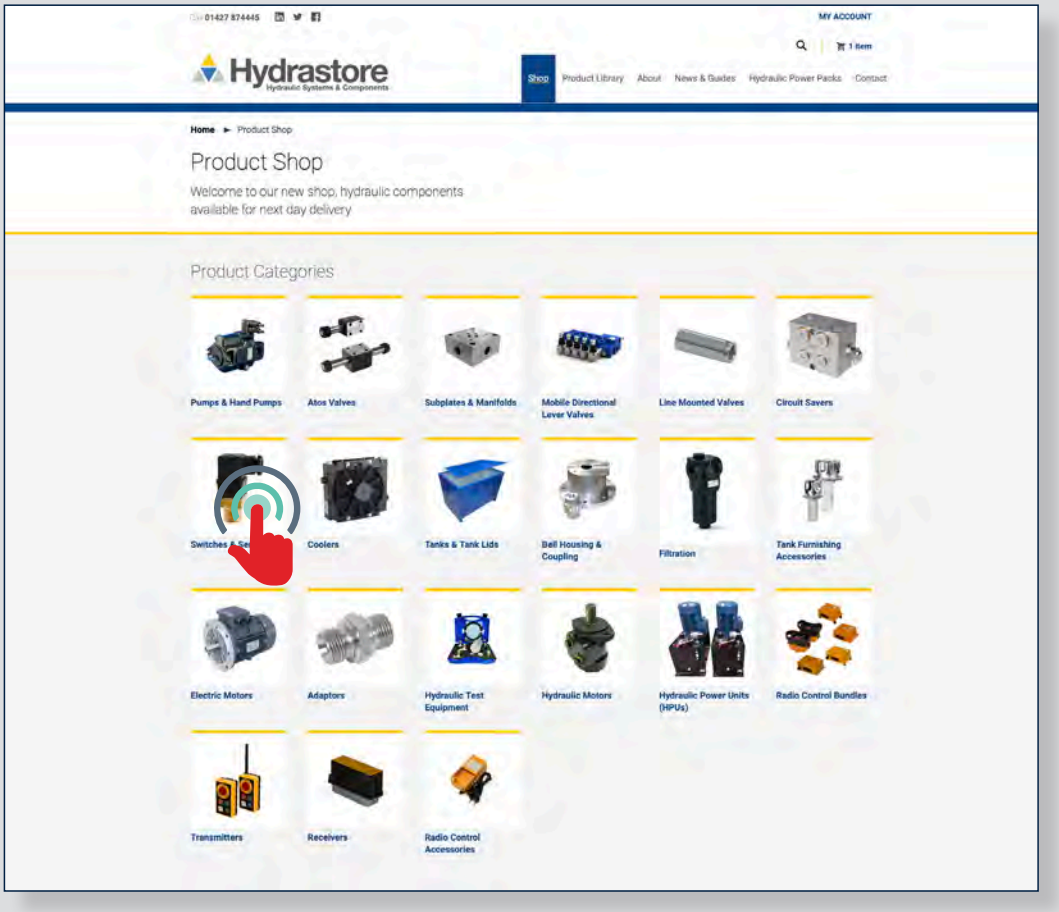

The main index menu is designed and categorised for quick and easy product selection...

Select 'Switches & Sensors'

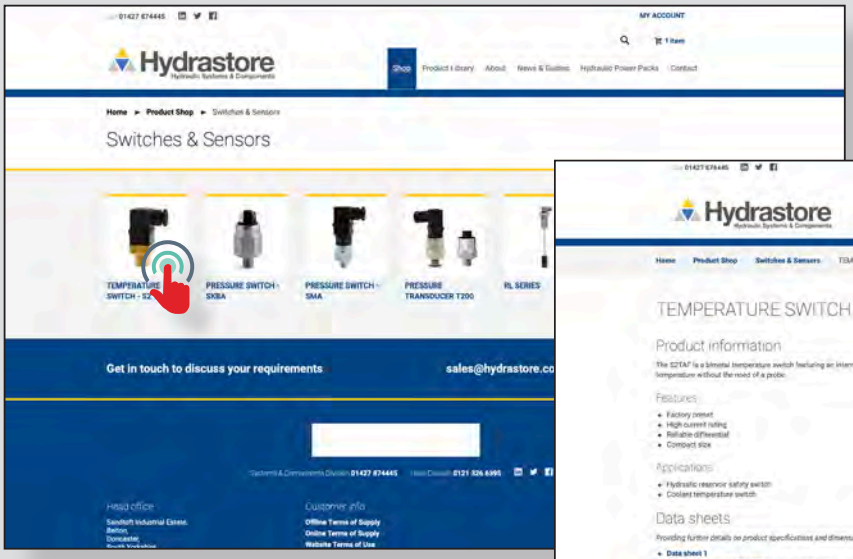

Select the item you need...

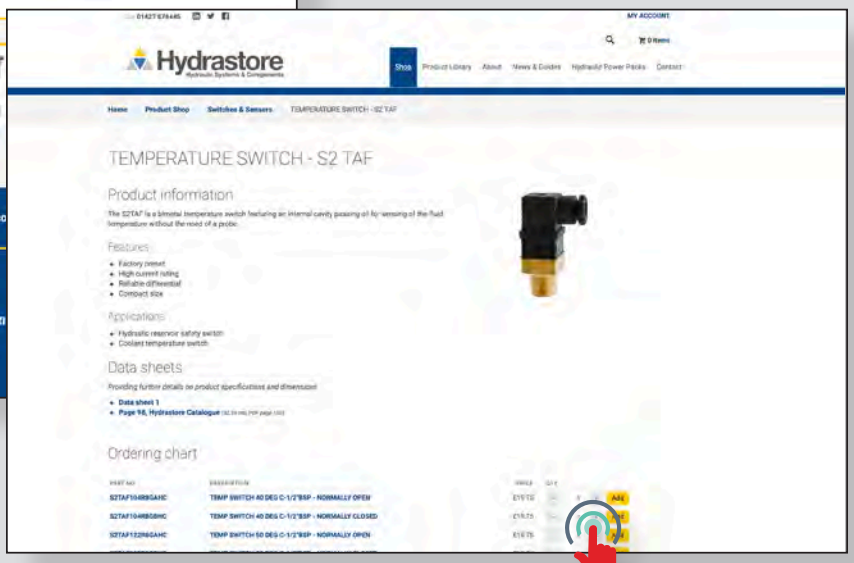

Select quantity from the options, add to basket, checkout, delivered!

Intensifiers overview

PRESSURE INTENSIFIERS 254

Hydrastore
Hydraulic Systems & Components

miniBOOSTER®

PRESSURE INTENSIFIERS

A comprehensive range of pressure intensifier products suitable for a wide range of applications

- Used in applications where increased pressure is required
- Broad and cost effective range
- 20-207 bar inlet à Up to 5,000 bar outlet
- Flow up to 400 lpm
- 13 intensification factors
- Withstand the most arduous working environments
- Stainless steel options
- Compatible with mineral and glycol based fluids
- Custom options available

Outlet pressure (bar)	Average outlet flow (lpm)	Inlet pressure (bar)	Inlet flow (l/min)	Connec-tion	Weight (kg)	Ratio	Part no., steel:	Part no., stainless steel	Comments	Image
24 - 800	0.3 - 0.5	20 - 207	2.0 - 8.0	Tube, flange & cartridge	0.7	1.2 - 7.5	HC1	HC1W		
24 - 800	0.3 - 2.5	20 - 207	2.0 - 15.0	Tube, flange & cartridge	1	1.2 - 20.00	HC2	HC2W		
24 - 800	0.7 - 11.0	20 - 207	2.0 - 15.0	Tube & flange	3.8	1.2 - 20.0	HC2D	HC2DW		
80 - 1380	1.5 - 5.0	20 - 207	2.0 - 14.0	Tube & flange	8	4.0 - 13.0		HC2DHW		
20 - 800	2.0 - 3.0	20 - 207	2.0 -15.0	Tube & flange	4.15	1.2 - 12.0	HC2D2	HC2D2W	2 media	
80 - 1380	0.6 - 1.6	20 - 207	2.0 - 8.0	Tube & flange	8	4.0 - 12.0		HC2D2HW	2 media	
24 - 500	0.3 - 2.5	20 - 207	2.0 - 15.0	Flange & cartridge	2.5	1.2 - 20.0	HC3	HC3W		
26 - 800	1.5 - 7.0	20 - 207	2.0 - 35.0	Tube & flange	3.7	1.3 - 9.8	HC4	HC4W		
100 - 3000	1.2 - 3.5	20 - 207	2.0 - 38.0	Tube & flange	4	5.1 - 17.3	HC4H			

Intensifiers overview

Outlet pressure (bar)	Average outlet flow (lpm)	Inlet pressure (bar)	Inlet flow (l/min)	Connec-tion	Weight (kg)	Ratio	Part no., steel:	Part no., stainless steel	Comments	Image
24 - 800	0.3 - 2.5	20 - 207	2.0 - 15.0	Tube & flange	3	1.2 - 20.0	HC5		double acting	
26 - 800	2.5 - 15.0	20 - 207	5.0 - 70.0	Tube & flange	9.5	1.3 - 8.2	HC6			
124 - 5000	1.0 - 7.0	20 - 207	5.0 - 50.0	Tube & flange	11	6.2 - 25.0	HC6H			
24 - 800	11.2 - 56.0	20 - 207	5.0 - 70.0	Tube & flange	20	1.2 - 8.2	HC6D	HC6DW		
80 - 1380	3.0 - 12.5	20 - 207	5.0 - 50.0	Tube & flange	35	4.0 - 16.0		HC6DHW		
20 - 800	6.0 - 41.0	20 - 207	5.0 - 70.0	Tube & flange	24	1.0 - 10.1	HC6D2	HC6D2W	2 media	
100 - 2000	0.3 - 1.6	20 - 207	2.0 - 14.0	Tube, flange & cartridge	1.5	5.0 - 20.0	HC7	HC7W		
100 - 2000	0.3 - 1.6	20 - 207	2.0 - 14.0	Tube, flange & cartridge	4.5	5.0 - 20.0	HC8			
220 - 5000	0.3 - 1.8	20 - 207	5.0 - 20.0	Tube & flange	9.9	8.2 - 25.0	HC9			
20 - 1380	2.0 - 5.6	20 - 207	5.0 - 30.0	Tube & flange	25	5.2 - 15.0	HC9D2	HC9D2W	2 media	

Hydrastore
Hydraulic Systems & Components

Online shop now open

Every stock item in this catalogue is now available online for next day delivery

www.hydrastore.co.uk/shop

Hydraulic motors overview

ORBITAL MOTORS	258
H1 AXIAL PISTON SINGLE MOTOR / CLOSED CIRCUIT	261
RDM AXIAL PISTON MOTOR / OPEN CIRCUIT	261
MP1 FIXED DISPLACEMENT AXIAL PISTON MOTOR	261
AXIAL PISTON MOTORS - KAWASAKI	262
RADIAL PISTON MOTORS - KAWASAKI	263
FIXED DISPLACEMENT	264
GEAR MOTORS	264
AXIAL PISTON MOTORS - HANSA	266

ORBITAL MOTORS

OMM

Frame size	8	12.5	20	32	40	50
Displacements cc/rev	8.2	12.5	19.9	31.6	39.8	50
RPM Max Con't	1950	1550	1000	630	500	400
Torque Nm Con't	11	16	25	40	45	46
Con't Max Bar drop	100	100	100	100	90	70

The OMM series with spool valve design is an economical motor with integrated rotor technology. Intended for light duty applications, the OMM series offers many advantages such as compact size, high speed, medium torque and extreme low weight. The OMM series motors are used primarily in the mobile, industrial and agricultural markets.

WP

Frame size	25	32	40	50	60	80	100	125	160	200	250	315	400
Displacements cc/rev	25	32	40	50	59	78	96	125	159	190	240	303	388
RPM Max Con't	1570	1550	1471	1208	1185	896	728	559	452	367	291	228	155
Torque Nm Con't	35	45	65	91	125	164	195	258	321	380	445	460	488
Con't Max Bar drop	100	100	100	140	160	160	160	160	160	150	140	120	95

The WP motor series is an economical alternative to more complex roller gerotor designs and still provides high efficiency across a wide performance range. These motors are intended for light-duty applications requiring high torque in a compact package and are suitable for industrial and mobile applications including car wash brushes, food processing equipment, conveyors, machine tools, agricultural equipment, sweepers, skid steer attachments, and more.

WR

Frame size	40	50	60	70	80	90	100	115	130	160	200	240	250	290	320	400
Displacements cc/rev	40	50	59	71	79	88	100	113	129	160	198	236	250	291	322	400
RPM Max Con't	1116	1058	890	865	759	651	610	539	472	379	308	249	250	210	188	152
Torque Nm Con't	93	111	138	176	202	222	246	284	316	400	462	548	561	526	518	551
Con't Max Bar drop	155	155	155	172	172	172	172	172	172	172	172	172	172	138	121	104

The WR Series motors incorporate the latest advances for smooth performance, efficiency and durability. Featuring an optimized Roller Stator geometry with seven precision rollers to eliminate sliding friction and provide rolling contact between the rotor and stator, thus increasing motor efficiency. A three-zone spool valve, integral check valves and a provision for a case drain reduce pressure on internal seals to improve product life. A wide variety of mounting, shaft, motor displacement and porting options are available to meet all application needs.

CE

Frame size	120	160	200	230	260	300	350	375	470	540	750
Displacements cc/rev	121	162	204	232	261	300	350	375	465	536	748
RPM Max Con't	360	370	300	260	260	250	220	200	160	140	100
Torque Nm Con't	322	424	525	559	706	802	904	972	1040	1003	1082
Con't Max Bar drop	207	207	207	207	207	207	207	207	172	138	103

The CE Product Line with its compact size, light weight and low speed efficiency is the perfect fit for wheel drive applications. Perfect for applications with strict weight and size requirements and widely used in agricultural & forestry, commercial & road vehicles, material handling & equipment and bulk materials handling sectors.

RE

Frame size	80	100	125	160	200	230	250	315	400	500
Displacement cc/rev	80	100	125	160	200	228	250	305	393	493
RPM Max Con't	793	744	596	471	377	324	298	240	185	149
Torque Nm con't	234	301	364	466	599	652	703	872	910	848
Con't Max Bar drop	210	210	210	210	210	200	200	200	160	120

RE Series motors offer incredibly stable performance at low speeds, and perform well in a wide range of applications. They are especially well suited for low flow, high pressure applications, due to very high volumetric efficiency. Four bearing options, combined with standard mounting flanges and output shafts, allow the motor to be configured to suit nearly any application.

OMEW

Frame size	100	125	160	200	250	315	345	400
Displacements cc/rev	100	125	160	200	150	315	345	400
RPM Max Con't	600	475	375	300	240	190	175	150
Torque Nm Con't	250	320	410	400	470	550	610	700
Con't Max Bar drop	200	200	200	150	140	130	130	130

Wheel motor with strong outrigger bearing ideal for propel applications and optimized for many different applications and conditions.

WS

Frame size	80	100	125	160	200	230	250	315	400	500
Displacement cc/rev	80	100	125	160	200	228	250	305	393	493
RPM Max Con't	793	744	596	471	377	324	298	240	185	149
Torque Nm con't	234	301	364	466	599	652	703	872	910	848
Con't Max Bar drop	210	210	210	210	210	200	200	200	160	120

The W-series is a competitive fit at a competitive price in low to medium-duty cycle applications. High reliability and pressure ratings from 160-207 bar* make these motors a perfect match in a wide range of applications in multiple hydraulic markets. The WS targets agricultural equipment, skid steer attachments, and other applications that require greater torque under demanding conditions.

OMS

Frame size	80	100	125	160	200	250	315	400	500
Displacements cc/rev	80.5	100	125.7	159.7	200	250	314.9	393	488
RPM Max Con't	810	750	600	470	375	300	240	190	155
Torque Nm Con't	240	305	375	490	610	720	825	865	850
Con't Max Bar drop	210	210	210	210	210	200	200	160	120

The OMS is suitable for many mobile and industrial sectors where the motors require high torques in compact packages working within demanding conditions.
The OMS offers numerous housings, wide displacements and shaft options to meet most common SAE and European standards.

OMT

Frame size	160	200	250	315	400	500
Displacements cc/rev	161.1	201.4	251.8	326.3	410.9	523.6
RPM	625	625	500	380	305	240
Torque Nm Con't	470	590	730	950	1080	1220
Con't Max Bar drop	200	200	200	200	180	160

The OMS is suitable for many mobile and industrial sectors where the motors require high torques in compact packages working within demanding conditions. The OMT offers numerous housings, wide displacements and shaft options to meet most common SAE and European standards.

OMV

Frame size	315	400	500	630	800
Displacements cc/rev	314.5	400.9	499.6	629.1	801.8
RPM	510	500	400	315	250
Torque Nm Con't	920	1180	1460	1660	1880
Con't Max Bar drop	200	200	200	180	160

The OMV is suitable for many mobile and industrial sectors where the motors require high torques in compact packages working within demanding conditions. The OMV offers numerous housings, wide displacements and shaft options to meet most common SAE and European standards.

T-SERIES CHARACTERISTICS

- Motors with speed sensor
- Ultra short motors
- Motors with integrated brake
- Motors with integrated flushing valve
- Special dust seal ring for additional shaft seal protection

FEATURES AND BENEFITS

- High bearing capacity and robust cardan shaft design for longer life
- Outstanding motor efficiency for reduced fuel consumption
- Low leakage, securing energy savings
- Short motors without bearings for compact integration in gear boxes and other flexible design options
- Integrated flushing valve for continuous oil renewal and cooling in a closed circuit
- Special mounting flange on wheel motors for optimal utilization of bearing capacity

H1 AXIAL PISTON SINGLE MOTOR / CLOSED CIRCUIT

The H1 bent axis motors are designed to complement the growing family of H1 axial piston pumps. Featuring proven 32 degree bent axis technology, zero degree capability and high overall efficiency, they offer a number of significant advantages over many comparable products on the market.

Displacement (cm3/rev.)	Pressure (bar)	Max. Pressure (bar)	Maximum speed (rpm)	Weight (kg)
60	450	480	3600	29.8
80			3200	34.8
110			2900	48.8
160			2600	61.9
210			2350	81
250			2200	87.7

RDM AXIAL PISTON MOTOR / OPEN CIRCUIT

The Danfoss Reverse Displacement Motor (RDM) is a breakthrough in technological innovation and engineering. The heart of the new technology is an integrated shift valve which when used in a fan drive application provides a series of cost-saving and efficiency-boosting advances.

Displacement (cm3/rev.)	Pressure (bar)	Max. Pressure (bar)	Maximum speed (rpm)	Weight (kg)
25	260	350	3400	17.5
30			3500	
35		325	3600	
38		350		
45		325	3500	

MP1 FIXED DISPLACEMENT AXIAL PISTON MOTOR

MP1 motor is Danfoss's new generation of fixed displacement axial piston motors. The MP1 motor is designed for use in mobile equipment using existing and proven technology. These motors have been optimized to deliver extended product life, a compact package, option variety and a competitive installation cost.

Displacement (cm3/rev.)	Pressure (bar)	Max. Pressure (bar)	Maximum speed (rpm)	Weight (kg)
20	350	380	4200	5.6
24				

Hydrastore
Hydraulic Systems & Components

Kawasaki
Powering your potential

AXIAL PISTON MOTORS - KAWASAKI

M5X

The M5X series is an extremely compact fixed displacement swash plate type axial piston motor with built-in parking brake designed for the swing function of excavators, cranes and other construction machinery.

Displacement (cm3/rev.)	Pressure (bar)	Max. Pressure (bar)	Maximum speed (rpm)	Weight (kg)
80	330	400	2200	38
130	324	392	1850	47
180	324	392	1680	61
250	330	400	1520	100

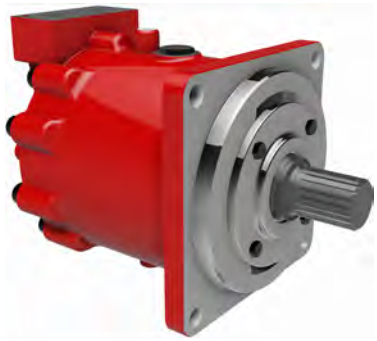

M3B

The M3B series are swash plate type axial piston motors of variable displacement. They are used extensively in mobile crusher drives, cranes and drill rigs.

Displacement (cm3/rev.)	Pressure (bar)	Max. Pressure (bar)	Maximum speed (rpm)	Weight (kg)
195	320	350	1900	72
280	300		1700	93
533			1400	147
800			1200	235

M3X

The M3X is a fixed displacement axial piston motors and is used extensively in mobile crusher drives, cranes and drill rigs.

Displacement (cm3/rev.)	Pressure (bar)	Max. Pressure (bar)	Maximum speed (rpm)	Weight (kg)
195	300	350	1900	42
280			1700	62
533			1400	90
800			1200	133

M7V

The M7V series is a high speed variable displacement swash plate type axial piston motor. It is suitable for use in hydrostatic transmissions, drill rigs and crane winch systems.

Displacement (cm3/rev.)	Pressure (bar)	Max. Pressure (bar)	Maximum speed (rpm)	Weight (kg)
85	400	450	3900	39
112			3550	46
160			3100	63
212	420	500	2900	90

RADIAL PISTON MOTORS - KAWASAKI

HPB MOTORS

The HPB fixed displacement radial piston motors are suitable for the most demanding of industrial applications with increased speed and power above the HMB series.

Displacement (cm3/rev.)	Pressure (bar)	Max. Pressure (bar)	Maximum speed (rpm)	Weight (kg)
983	250	300	450	144
983			490	
1,344			340	
1,344			430	
1,600			270	
1,600			365	
2,050			215	217
2,050			300	
2,470			200	265
2,470			250	
3,087			175	
3,087			230	
4,310			150	420
5,322			130	429

HMB MOTORS

The fixed displacement HMB series radial piston motors have a well proven design that incorporates high efficiency with good breakout torque and smooth running capability.

Displacement (cm3/rev.)	Pressure (bar)	Max. Pressure (bar)	Maximum speed (rpm)	Weight (kg)
188	207	241	500	40
442			450	73
492				
740	250	293	400	120
983			300	144
1344				
1639			250	144
2050			220	217
2470			220	265
2470			168	265
3087			175	265
3087			135	265
4310			125	420
5310			100	429
6800			120	481-510
8000	190	227	100	510

HMF MOTORS

The HMF three-speed models have pre set displacements which can be chosen from a wide range to suit specific application requirements. Motor displacement can be changed with ease while the motor is running.

Displacement (cm3/rev.)	Pressure (bar)	Max. Pressure (bar)	Maximum speed (rpm)	Weight (kg)
82-1600	250	275	1000-270	172
82-3087			1000-175	282
164-4588			1000-150	450
164-5326			1000-130	460

HMC MOTORS

The HMC series variable displacement models have two pre-set displacements which can be chosen from a wide range to suit specific application requirements. These motors are also available in a continuously variable version using either hydro-mechanical or electro-hydraulic control methods.

Displacement (cm3/rev.)	Pressure (bar)	Max. Pressure (bar)	Maximum speed (rpm)	Weight (kg)
49-492	207	241	1000-500	100
81-737			1000-450	150
82-1600			1000-270	172
82-2048	250	275	1000-215	235
82-3087			1000-175	282
164-4588			1000-150	450
164-5326			1000-130	460

HPC MOTORS

The enhanced variable displacement HPC models include special low friction components, combined with crankcase flushing flow, to achieve increased shaft power. It is used around the world in marine and offshore winch applications and is known for its efficiency and reliability.

Displacement (cm3/rev.)	Pressure (bar)	Max. Pressure (bar)	Maximum speed (rpm)	Weight (kg)
164-1600	250	275	630-270	172
164-2048			630-215	235
164-3087			630-175	282
328-4588			545-150	450
492-5326			515-130	460

Hydrastore
Hydraulic Systems & Components

ronzio OLEODINAMICA

FIXED DISPLACEMENT GEAR MOTORS

SPECIFICATIONS:

- Aluminium with cast iron covers
- High pressure capability
- Axial compensation for high performance.
- High volumetric efficiency: 95% average.
- Speeds up to 4500 rpm
- Taper, parallel, keyed, splined shaft options
- Multiple flange option
- Multiple porting options

GROUP 2 ALUMINIUM MOTOR

Group Z2 aluminium motors with cast iron covers.

Displacement (cm3/rev)	Maximum pressure (bar)	Maximum speed (rpm)	Weight (kg)
4.4	300	4500	3.4
6.28	300	4500	3.5
8.16	300	3700	3.57
11.3	300	3300	3.95
14.45	300	2700	4
16.95	270	2500	4.15
20.1	230	2500	4.5
25.75	180	2500	4.8
31.4	160	2200	5

GROUP 3 ALUMINIUM MOTORS

Z3 Aluminium motors with cast iron covers.

Displacement (cm/rev)	Max. Pressure (bar)	Maximum speed (rpm)	Weight (kg)
19.9	310	3000	10.6
24.9	310	3000	10.8
29.9	310	3000	11
34.3	310	3000	11.2
40.5	280	2700	11.4
45.2	280	2700	11.5
49.9	250	2200	11.7
54.4	250	2200	11.9
60	220	2000	12
63.9	220	2000	12.2
70	190	1800	12.4
78.7	190	1800	12.7
86.6	180	1800	13.1

SPECIFICATIONS:

- Fully cast iron construction
- High pressure capability
- Axial compensation for high performance.
- High volumetric efficiency: 95% average.
- Speeds up to 3500 rpm
- Taper, parallel, keyed, splined shaft options
- Multiple flange option
- Multiple porting options

GROUP 2 CAST IRON

W2 Cast iron motors strong and compact.

Displacement (cm3/rev)	Maximum pressure (bar)	Maximum speed (rpm)	Weight (kg)
19.9	280	3000	9.365
24.9	280	3000	9.55
34.3	280	3000	9.75
45.2	250	2200	10.2
54.5	230	2200	10.55
63.9	200	2000	10.9
70	170	1800	11.5
78.7	170	1800	12

GROUP 3 CAST IRON

W3 Cast iron motors strong and compact.

Displacement (cm3/rev)	Maximum pressure (bar)	Maximum speed (rpm)	Weight (kg)
25	300	3500	10
35	280	3000	11
45	250	2800	12
55	230	2500	13.5
64	200	2500	15
80	170	2200	16

AXIAL PISTON MOTORS - HANSA

HANSA-TMP manufactured products provide the perfect solution for high power open circuit and closed-circuit transmission systems where space is of a premium.

Torques from 110Nm to 350Nm.
Displacements from 20 to 64 cc/rev
Speed's from 700 to 4000 rpm.

Benefits of the heavy-duty Hansa TMF motors:
- Compact in design.
- High volumetric and mechanical efficiencies.
- High starting torque.
- Low pulsations and vibrations
- Durable and reliable.

TMF 600

FEATURES:
- Excellent weight/power ratio
- High rotation speed
- Excellent volumetric and mechanical efficiency
- Compact design

Displacement cm3/ rev.	Pressure (bar)	Max. Pressure (bar)	Maximum Speed (rpm)	Weight (kg)
22, 28	350	420	4200	11.3
35, 40, 46	350	420	4000	17.8
50	350	410	3600	17.8
63, 71, 75,92	350	420	3500	32.5
100	350	410	3240	32.5

TMF 900

FEATURES:
- High pressure
- High rotation speed
- Excellent volumetric and mechanical efficiency
- Compact design

Displacement cm3/ rev.	Pressure (bar)	Max. Pressure (bar)	Maximum Speed (rpm)	Weight (kg)
72	400	450	4100	28
90	400	450	4000	34
110	400	450	3800	34

Hose assembly machinery overview

Balflex assembly machinery

MANUAL PUMP CRIMPING MACHINE 1.1/2” - P20_HP 268
ELECTRIC CUTTING MACHINE 2” - CM50 268
ELECTRIC CRIMPING MACHINE – P20.T380 269
ELECTRIC CUTTING MACHINE UP TO 2” SIX SPIRALS - CM400 269

Gates assembly machinery

MCX 25 ASSEMBLY MACHINERY PACKAGE 270
MCX 50 ASSEMBLY MACHINERY PACKAGE 271
TECHNICAL INFORMATION 272

Balflex Assembly Machinery

Balflex hose assembly machinery provides reliable, efficient and precise solutions for assembling hoses. Hydrastore offers two packages including a crimping machine with a standard set of dies and a cutting machine in each.

MANUAL PUMP CRIMPING MACHINE 1.1/2” - P20_HP

Hand operated machine suitable for small-scale or field operations, offering precision and reliability.

TECHNICAL DATA	
Crimping range (mm)	10-61
Crimping force (kN)	1370
Crimping force (tons)	137
Hose size (inches)	2 Wire Braid 1.1/2” (DN38) / 4 Spirals 1.1/4” (DN31)
Diet set	P20
Max. opening (mm)	+25
Master die D/L (mm)	84/80
Control	Manual Gauge
Operation	Enerpac Hand Pump
QC tool	Included
Length (mm)	550
Width (mm)	380
Height (mm)	380
Total Weight (kg)	102

ELECTRIC CUTTING MACHINE 2” - CM50

TECHNICAL DATA	
Serrated Blade (mm)	300X4.5X32
Frequency 50Hz (rpm)	2850
Frequency 60Hz (rpm)	3370
Motor (kW)	4
Motor (HP)	5.3
Voltage (V)*	380 Tri-phasic
Noise Level (db(A))	65
Length (mm)	545
Width (mm)	550
Height (mm)	580
Total Weight (kg)	78

ELECTRIC CRIMPING MACHINE – P20.T380

TECHNICAL DATA	
Crimping range (mm)	10-87
Crimping force (kN)	2000
Crimping force (tons)	200
Crimpings/hour	700/850
Noise Level (db(A))	71
Hose size (inches)	2 Wire Braid 2" (DN51) / 4 Spirals 2" (DN51)
Diet set	P32
Max. opening (mm)	+33
Master die D/L (mm)	99/80
Control	Manual Gauge
Motor (kW)	4
Motor (HP)	5.3
Voltage (V)*	380 Tri-phasic
QC tool	Included
Pedal	Included
Die Set Rack	Included
Length (mm)	760
Width (mm)	560
Height (mm)	800
Total Weight (kg)	265

Equipped with an electric motor the P20 is designed for high volume operations, offering consistent and high-speed crimping.

ELECTRIC CUTTING MACHINE UP TO 2" SIX SPIRALS - CM400

TECHNICAL DATA	
Serrated Blade (mm)	400X4.0X50
Frequency 50Hz (rpm)	2850
Frequency 60Hz (rpm)	3370
Pneumatic input Min. (Bar)	4
Motor (kW)	5.5
Motor (HP)	7.5
Voltage (V)*	380 Tri-phasic
Noise Level (db(A))	65
Length (mm)	1020
Width (mm)	660
Height (mm)	1380
Total Weight (kg)	197

Note: Pneumatic version also available

Gates Self Assembly Machinery

All Gates hoses, parts and assembly machines are constructed in unison. This integrated approach ensures a perfect fit, unrivalled safety and performance meeting or exceeding all international standards. Therefore, when you use Gates self-assembly machinery with Gates hoses and parts, hose assemblies can be made quickly and easily to factory quality standards whilst reducing machinery down time.

At Hydrastore we offer two hose assembly machinery packages each featuring a custom-designed assembly machine, hose cutting machine and a selection of die sets appropriate for your requirements.

MCX 25 SELF ASSEMBLY MACHINERY PACKAGE

MCX 25 ASSEMBLY MACHINE

A compact crimper ideal for smaller workshops, the MCX 25 is suitable for hose diameter sizes up to 1”. Equipped with a die set storage rack allowing for logically organised die storage within easy reach of the operator to aid speedy selection and assembly.

MKX 25 HOSE CUTTING MACHINE

A compact hose cutting machine for cutting up to 1 ¼” of four spiral wire hose, the MKX 25 offers fast cutting and a low cost of ownership due to its maximal motor lifetime.

4 X DIE SETS

Gates dies have a special proprietary profile design that creates a near perfect cylindrical and durable crimp.
A selection of 4 die sets is included to meet your hose assembly needs. Suitable for assembling the PRO series Hose & EX Inserts and Megacrimp hose inserts up to 1”.

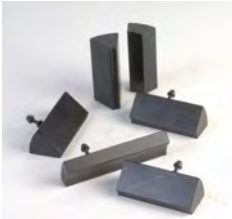

MCX 50 SELF ASSEMBLY MACHINERY PACKAGE

MCX 50 ASSEMBLY MACHINE

For the professional workshop the MCX 50 is a full range crimper able to produce hose assemblies up to 2” size spiral wire hose. An optional foot pedal enables hands-free operation. Also equipped with a die set storage rack allowing for logically organised die storage within easy reach of the operator, thus speeding up die selection and assembly.

Equipped with a user-friendly front plate design to support a wider crimp capability. The special cut out provides more room to manoeuvre, facilitating the crimping of even more special configurations.

MKX 40 HOSE CUTTING MACHINE

A heavy duty cutter for hose diameters up to 2”. Easy to use with a brake motor to ensure the blade stops turning within 10 seconds after switch-off.

8 X DIE SETS

Gates dies have a special proprietary profile design that creates a near perfect cylindrical and durable crimp.
A selection of 8 die sets is included to meet your hose assembly needs.
Suitable for assembling the PRO series Hose & EX Inserts and Megacrimp hoses inserts up to 1”
along with most GS,GSP & GSM Inserts up to 2”

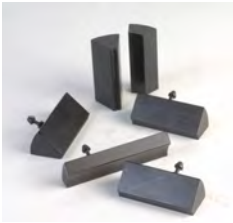

TECHNICAL INFORMATION

	ASSEMBLY MACHINES		CUTTING MACHINES	
	MCX 25 3 phase	MCX 50 3 phase	MKX 25 1 phase	MKX 40 3 phase
Power supply	380v	380v	220v	380v
Max Capacity	1 ¼”	2”	1 ¼”	2”
Crimping force	280	280	N/A	N/A
Motor (KW)	3	5.5	2.2	4.6
Dimensions (h x w x l)	790x600x550	1400x580x610	540x510x400	430x690x745
Weight (KG)	160	410	20	75
Note		Optional Foot Pedal	No Brake Motor	Brake Motor

Note: Our stock range of Gates hoses and hose ends can be found in the hose section in the front of the catalogue. For any further information on hoses, machinery and die sets please call our Hose Division or email: hoses@hydrastore.co.uk

Cylinders overview

ATOS CYLINDERS **274**

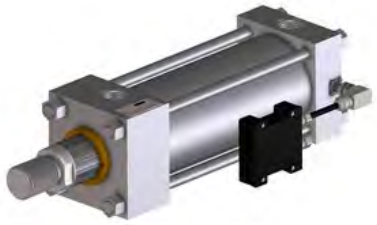

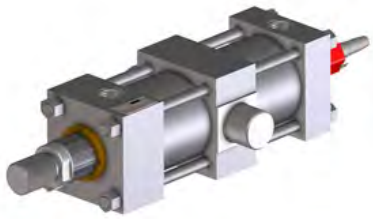
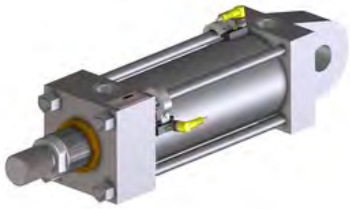
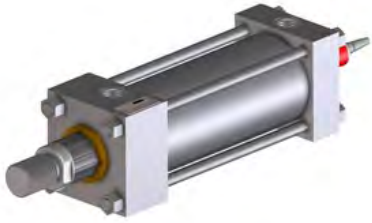

Type	Heading / Type / Mount-ing / Format	Part number	Description	Pressure (bar)	Flow (lpm)	Size	ATOS Catalogue Page
Cylinder	Tie-rod	CK	Cylinder, double acting, 25-200mm bore	250	Variable	63-200 mm	B137
Cylinder	Tie-rod	CH	Cylinder, double acting, counterflanges, 63-200mm bore	250	Variable	63-200 mm	B140
Cylinder	Tie-rod	CKF	Cylinder, double acting, 25-200mm bore with built in magnetosonic position transducer	250	Variable	40-200 mm	B310
Cylinder	Tie-rod	CKN	Cylinder, double acting, 25-200mm bore with built in magnetosonic position transducer	250	Variable	40-200 mm	B310
Cylinder	Tie-rod	CKM	Cylinder, double acting, 25-200mm bore with built in magnetostrictive position transducer	250	Variable	40-200 mm	B310
Cylinder	Tie-rod	CKP	Cylinder, double acting, 25-200mm bore with built in potentiometric position transducer	250	Variable	40-200 mm	B310
Cylinder	Tie-rod	CKV	Cylinder, double acting, 25-200mm bore with built in inductive position transducer	250	Variable	40-200 mm	B310
Cylinder	Tie-rod	CKS	Cylinder, double acting, 25-100mm bore with built inadjustable proximity sensors	150	Variable	63-200 mm	B450
Cylinder	Tie-rod	CKA	Cylinder for potentially explosive atmospheres, optional position transducer, optional proximity sensor, ATEX	250	Variable	63-200 mm	B310
Cylinder	Tie-rod	CKSA	Cylinder for potentially explosive atmospheres, adjustable proximity sensors, ATEX	150	Variable	63-200 mm	B450

Atos Cylinders

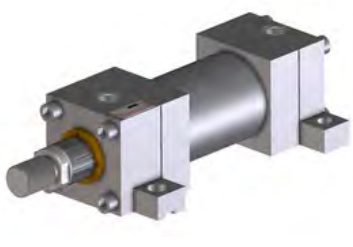

Type	Heading / Type / Mount-ing / Format	Part number	Description	Pressure (bar)	Flow (lpm)	Size	ATOS Catalogue Page
Cylinder	Mill type	CN	Cylinder, double acting, counterflanges, 40-200mm bore	250	Variable	40-200 mm	B180
Cylinder	Mill type	CC	Cylinder, double acting, counterflanges, 50-320mm bore	320	Variable	50-320 mm	B241
Cylinder	Mill type	CH	Cylinder, double acting, counterflanges, 250-400mm bore	250	Variable	250-400 mm	B160
Cylinder	Mill type	CNX	Cylinder, stainless steel, optional rod posiiton sensor, 50-100mm bore, 36-70mm rod, up to 3000m stroke	150	Variable	50-100 mm	B180

Atos - Expolsion proof cylinders

Type	Type / Mount-ing / Format	Part number	Description	Pressure (bar)	Flow (lpm)	Size	Catalogue Page
Cylinder	Mill type	CNX	Cylinder, stainless steel, optional rod position sensor, 50-100mm bore, 36-70mm rod, up to 3000m stroke	150	Variable	50-100 mm	BW500

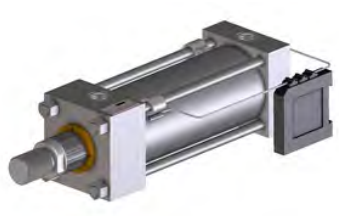

Type	Heading / Type / Mounting / Format	Part number	Description	Pressure (bar)	Flow (lpm)	Size	ATOS Catalogue Page
Cylinder	Tie-rod	CKA	Cylinder for potentially explosive atmospheres, optional position transducer, optional proximity sensor, ATEX	250	Variable	25-200 mm	BX400
Cylinder	Tie-rod	CKSA	Cylinder for potentially explosive atmospheres, adjusta-ble proximity sensors, ATEX	150	Variable	25-100 mm	B450

Hydrastore
Hydraulic Systems & Components

Online shop now open

Every stock item in this catalogue is now available online for next day delivery

www.hydrastore.co.uk/shop

Actuators

MOBILE HYDRAULIC SERIES 278
M-DA-H – ROTARY, HELICAL 278
INDUSTRY SERIES 279
MOBILE HYDRAULIC SERIES 279
ON-OFFSHORE/ARMATURE SERIES 280
ROTARY LIFT COMBINATIONS 280

MOBILE HYDRAULIC SERIES

DHK-H-ZH – ROTARY, HELICAL PLUS LINEAR

- Max working pressure 210 bar
- Torque up to 14.700 Nm
- Standard angle of rotation up to 360°
- Stroke up to 700 mm
- Lift force up to 150.000 N
- Tractive force up to 110.000 N

DHK-H-ZV - ROTARY, HELICAL PLUS LINEAR

- Max working pressure 160 bar
- Torque up to 16.000 Nm
- Standard angle of rotation up to 360°
- Stroke up to 1,200 mm
- Lift force up to 360.000 N
- Tractive force up to 180.000 N

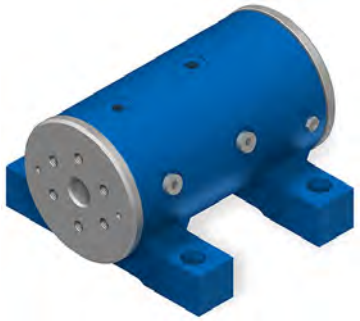

SA-H1 – ROTARY, HELICAL, PART TURN

- Max working pressure 210 bar
- Torque up to 100.000 Nm
- Standard angle of rotation up to 90°
- Emergency operation
- Front mounting

SA-H2 - ROTARY, HELICAL, PART TURN

- Max working pressure 210 bar
- Torque up to 250.000 Nm
- Standard angle of rotation up to 90°
- Emergency operation

AFR - ROTARY, HELICAL, PART TURN

- Max working pressure 210 bar
- Temperature range -20°C to + 80°C
- Opening moment up to 38.000 Nm
- Closing moment up to 11.000
- Spring return

M-DA-H – ROTARY, HELICAL

- Max working pressure 210 bar
- Torque up to 4.800 Nm
- Angle of rotation up to 360°
- Transitional drilling for conduits or cables
- Economical alternative for short and slow load charge
- Simple connection fitting

INDUSTRY SERIES

M-DA-H-F3 - ROTARY, HELICAL

- Max working pressure 210 bar
- Torque up to 5.000 Nm
- Standard angle of rotation up to 360°
- Load holding valve optional
- Direct bolting to the arm

M-DA-H-F1 - ROTARY, HELICAL

- Max working pressure 210 bar
- Torque up to 8.000 Nm
- Standard angle of rotation up to 360°
- Simple foot mounting
- High load suspension
- Simplest connection and fitting

M-DA-H-F2 - ROTARY, HELICAL

- Max working pressure 210 bar
- Torque up to 40.000 Nm
- Standard angle of rotation up to 360°
- Simple foot mounting
- Double sided shaft
- Small diameter
- High load suspension
- High load change

MOBILE HYDRAULIC SERIES

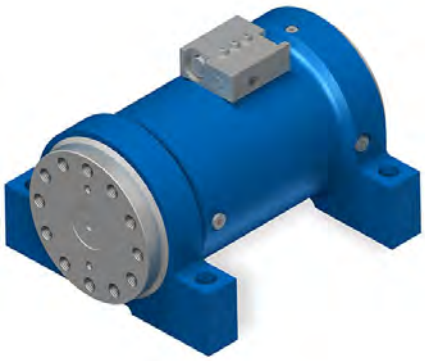

XM-DA-H AL - ROTARY, HELICAL

- Max working pressure 210 bar
- Torque up to 4.800 Nm
- Standard angle of rotation up to 360°
- Transitional drilling for conduits or cables
- Economical alternative for short and slow load charge
- Simple connection and fitting
- High-strength aluminium housing

ON-OFFSHORE/ARMATURE SERIES

SA-H1 – ROTARY, HELICAL, PART TURN

- Max working pressure 210 bar
- Torque up to 100.000 Nm
- Standard angle of rotation up to 90°
- Emergency operation
- Front mounting

SA-H2 - ROTARY, HELICAL, PART TURN

- Max working pressure 210 bar
- Torque up to 250.000 Nm
- Standard angle of rotation up to 90°
- Emergency operation

AFR - ROTARY, HELICAL, PART TURN

- Max working pressure 210 bar
- Temperature range -20°C to + 80°C
- Opening moment up to 38.000 Nm
- Closing moment up to 11.000
- Spring return

DHK-H-ZV - ROTARY, HELICAL PLUS LINEAR

- Max working pressure 160 bar
- Torque up to 16.000 Nm
- Standard angle of rotation up to 360°
- Stroke up to 1,200 mm
- Lift force up to 360.000 N
- Tractive force up to 180.000 N

ROTARY LIFT COMBINATIONS

DHK-H-ZH – ROTARY, HELICAL PLUS LINEAR

- Max working pressure 210 bar
- Torque up to 14.700 Nm
- Standard angle of rotation up to 360°
- Stroke up to 700 mm
- Lift force up to 150.000 N
- Tractive force up to 110.000 N

Radio control overview

HANDHELD TRANSMITTERS	282
BELLY PACK TRANSMITTERS	284
RECEIVERS - MFSHL	288
RECEIVERS - DIGITAL	289
RECEIVERS - PROPORTIONAL	289
RECEIVERS - FIELD BUS COMMUNICATION	291
EXPLOSION PROOF RECEIVERS	293
EXPLOSION PROOF TRANSMITTERS	294
HETRONIC EXPLOSION PROOF SUMMARY	295

HANDHELD TRANSMITTERS

Dimensions:	69mm x 123mm x 28mm
Power supply	3 AA Batteries or 1 3.6V Rechargeable Battery
Frequency	868, 915, 315MHz or 2.4GHz
Operating range	30m

POCKET MFHSL

- MFS allows operation of up to 20 units on same frequency
- Up to 500 hrs of operation
- Multiple standard configurations available
- Status LED's for low battery and stop actuation

The Pocket MFSHL transmitter is a compact, IP65 process control transmitter that is available in six standard configurations with up to eight high-reliability push buttons. By matching one of the MFS receivers (AC or DC) to the Pocket transmitter, customers have a range of options for meeting their specific application needs.

Dimensions:	205mm x 89mm x 86mm
Power supply	2 AA Batteries
Frequency	4XX, 868, 915MHz or 2.4GHz
Operating range	30m or 100m

HH MFHSL

- Standard and custom configurations available
- Up to 500 hrs of operation
- Toggle and membrane switches
- Status LED's for operation and low battery

The HH transmitters are available in numerous standard control configurations as well as customized versions to meet a broad range of applications. The rugged and compact "pistol grip" design allows the operator to hold the transmitter in one hand and be within thumbs reach of durable toggles or membrane switches that are factory configurable. These transmitters are designed for applications where a limited number of digital functions are required without sacrificing safety or reliability.

ERGO F 434

ERGO F MFSHL

Dimensions:	200mm x 92mm x 44mm
Power supply	3 AA batteries or 1 3.6V Rechargeable Battery
Frequency	4XX, 869, 915MHz or 2.4GHz
Operating range	30m or 100m
Dimentions:	123 mm x 69mm x 43mm

ERGO F

- Integrated LCD Display (434 version only)
- Easy to read and use buttons
- Diagnostic LED's for operation and Low battery
- Fully programmable, up to 3 speed operation

The ERGO F transmitter has been the professional operator's tool of choice for robust and reliable wireless remote control. Fully configurable, the ERGO F is built with highly reliable membrane switches available in single, dual and triple speed. The push buttons are easy to read, can be operated with or without gloved hands and each can achieve millions of actuations without failure. The 16-character LCD display provides battery condition and machine performance feedback at the touch of a button. The sturdily built ERGO F can be used in a wide range of indoor or outdoor applications such as EOT cranes, goliath cranes or jib cranes. Incorporated with Hetronic's Class 3 safety system and IP65 housing, the ERGO F transmitters are an extremely cost effective and flexible solution for your machine interface applications.

HANDHELD TRANSMITTERS

Power supply	3 AA batteries
Frequency	4XX, 869MHz or 1.2GHz
Operating range	100 m
Dimensions:	249mm x 86mm x 58mm

MINI

- IP 65 Durable case
- Status LED's for operation and low battery
- Single detent Start push button
- Prominent mushroom stop switch

The MINI is a small but powerful transmitter that can be used for countless process control applications. It's designed for durability and fits markets that require a limited number of digital functions. All MINI systems are designed to fit in the palm of the operator's hand. When not in use, the MINI can be worn conveniently on the operator's belt using the belt clip on the transmitter. The MINI system offers durable single or dual-speed membrane switches to withstand the toughest environment.

Dimensions:	186 mm x 82 mm x 41mm
Operating Voltage	3 AA batteries or 1 3.6V Rechargeable Battery
Frequency	4XX, 868, or 915MHz
Operating range	70m

ERGO F-21

- 21 high reliability membrane switch buttons
- Range: 70m (210')
- Integrated 16-character LCD
- Up to 16 diagnostic LED's

The ERGO F21 transmitter is a heavy-duty professional radio remote control designed and built with additional capability for applications where additional digital functionality is required. The F21 features an ergonomically designed IP65 case with a large E-Stop button for immediate shut-down of machinery prominently set at the top of the hand-set. With two control buttons next to a 16-character LCD display, the F21 operator can access valuable machine data with confidence and ease.

Power supply	9.6 NiMH Rechargeable Battery
Frequency	4XX or 869MHz
Operating range	70m to 100m
Dimensions:	234mm x 107mm x 36-47mm
Power supply	3 AA batteries or 1 3.6V Rechargeable Battery

ERGO 120

- 2.4" colour backlit TFT display
- Up to 8 diagnostic LED's
- Compliant: IEC60068-2 11,29,64
- Compliant: EN60204-1

The ERGO 120 is a robust and durable IP65 transmitter that is designed with an advanced 2.4" colour TFT backlit display, twelve configurable one or two-step buttons and a easy to reach bottom mounted emergency stop. It has a fast response time with less than 100ms and offers accurate, world-class performance. Field tested to ensure its durability, the ERGO 120 meets or exceeds IEC and EN requirements for shock, vibration and functional safety.

Frequency	4XX, 868, or 915MHz or 2.4Ghz
Operating range	30 or 100m
Dimensions:	236mm x 65mm x 104mm
Power supply	1 x 3.7V 3450 mAh Rechargeable Long life Li-ion Battery

ERGO S

- Joystick control capability
- TFT colour display 2.4" display
- Half or Full duplex transmission
- Protected firmware against known cyber attacks

The ERGO S brings the ergonomics of handheld transmitter to a new level with functional safety to meet the highest standard. It is equipped with up to twelve programmable buttons, a 2.4" TFT screen and with a joystick control capable of operating in rugged environment with IP65 rating. Tailor the ERGO-S to meet the needs of skip loaders, hook lifts, trucks, cranes, crushers and more. A belt clip and a magnetic function to attach to equipment allow for easy storage.

BELLY PACK TRANSMITTERS

NOVA-S

FEATURES

- Small footprint, ergonomically designed belly box.
- Compact, lightweight, rugged, field-proven human-machine-interface (HMI) transmitter.
- Designed for applications that require a limited amount of digital functionality.
- Available as pre-engineered and “off-the-shelf”.
- Customizable with toggle switches, buttons, STOP or other controls as required.

Dimensions:	125mm X 160mm X 70mm
Weight:	369g (913 oz) typical; depends on configuration
Operation voltage:	3.6V NiMH rechargeable battery pack or battery adaptor with 3 1.5V AA batteries
Frequency:	4xxMHz, 8xxMHz, 9xxMHz 1.2GHz and 2.4GHz
Standard power RF output EIRP (50 0hm)	10mW max or subject to country legislation

NOVA-M

FEATURES

- Ergonomically designed to be operated with gloves.
- Compact, lightweight, rugged, field-proven human-machine-interface (HMI) transmitter.
- Available with one (1) or two (2) dual axis joysticks or up to four (4) paddle levers.
- Customizable joysticks, toggle switches, buttons (STOP) or other controls as required.

Dimensions:	150mm X 180mm X 110mm
Weight:	910g (2.0 lbs.) typical; depends on configuration
Operation voltage:	3.6V NiMH rechargeable battery pack or battery adaptor with 3 1.5V AA batteries
Frequency:	4xxMHz, 8xxMHz, 9xxMHz 1.2GHz and 2.4GHz
Standard power RF output EIRP (50 0hm)	10mW max or subject to country legislation.

NOVA-L

FEATURES

- Hectronic offers the Nova-L pre engineered and ‘off-the-shelf’ for the most common applications.
- The NOVA-L is also available as a customized solution.
- Lightweight and sturdy.
- Ergonomically designed.
- Operator friendly.

Dimensions:	235mm X 160mm X 95mm
Weight:	1Kg (2.3lbs.) Typical, depends on configuration
Operation voltage:	3.6V NiMH rechargeable battery pack or battery adaptor with 3 1.5V AA batteries
Frequency:	4xxMHz, 8mmMHz, 9xxHMz, 1.2GHz and 2.4GHz
Standard power RF output EIRP (50 0hm)	10mW max or subject to country legislation

BELLY PACK TRANSMITTERS

NOVA-XL

FEATURES

- Field-proven, rugged, reliable, ergonomic designed human-machine-interface (HMI) transmitter.
- IP65 (exceeds NEMA 12/13).
- Large control panel has room for multiple digital and/or proportional precision controls.
- Controls custom configured to application needs: combination of paddle levers, multi-axis joysticks, toggle switches or buttons.

Dimensions:	165mm x 312mm x 170mm
Weight:	1.9kg (4.1lbs)
Operation range:	100m standard
Frequency:	4xxMHz, 8xxMHz, 1.216GHz, 2.4GHz
Power supply	3.6 V NiMH rechargable battery pack or battery adaptor with three 1.5 V AA batteries

NOVA-L 2.4 SERIES

FEATURES

- 2.4” Color back-lit TFT display (GUI Interface Option)
- Fully Configurable with joysticks, paddle levers, toggle switches, push buttons
- Safety address: 20 Bit over 1M possibilities (ADMO)
- GUI Customizable to Customer Feedback Needs

Dimensions:	264 mm x 151mm x 213mm
Weight:	1.5kg (3.31 lbs)
Operation range:	100m standard
Frequency:	419, 429, 434, 447, 458, 480, 869, 1216MHz, 2.4GHz
Power supply	3.6V rechargeable 2Ah Ni-MH battery or 3x AA primary cells or 5V to 36V via cable control

NOVA-XL 2.8 SERIES

FEATURES

- Integrated 2.8”” color TFT display
- Half duplex or Full Duplex
- Optional 9Ah or 10.6Ah Lithium Ion battery packs; 10 hrs. operation
- Safety: 20-bit programmable address with 1 million combinations
- Range: 100m (328’)

Dimensions:	165mm X 312mm X 170mm
Weight:	4.1lbs typical; depends on configuration
Operation time:	Varies depending on battery type of output
Frequency:	419 MHz, 429 MHz, 434 MHz, 447 MHz, 458 MHz, 868 MHz
Standard power RF output EIRP (50 0hm)	3.6V NiMH rechargeable battery pack or battery adaptor with 3 1.5V AA batteries or 9Ah or 10.6Ah Lithium Ion batteries

Note: Range from 30m, 100m and 1000m available.

BELLY PACK TRANSMITTERS

NOVA-XL 4.3 SERIES

FEATURES

- 4.3” colour TFT LED backlit, sunlight readable display.
- Fully customisable with joysticks, paddle leavers, toggle switches, push button switches, rotary switches and potentiometers.
- Additional options for touch screen and “man-down” safety feature.

Dimensions:	H: 190mm x W: 340mm x D: 205mm
Weight:	Typically 2.15kg (4.7lbs) depends on configuration.
Operation range:	100m
Frequency:	410-480MHz. 860-927MHz. 1.2GHz
Power supply	3.7v 9Ah rechargeable Li-ion

NOVA-XXL 4.3 SERIES

FEATURES

- Integrated 4.3” color TFT display
- Configurable: joysticks, paddle levers, Toggle switches, push buttons, key sw., STOP
- Optional Video Feedback available (VF)

Dimensions:	367mm x 229mm x 174mm
Weight:	2.4kg (5 lbs)
Operation range:	100m
Frequency:	419, 429, 434, 447, 458, 480, 868, 1216MHz, 2.4GHz
Power supply	3.6v 9Ah rechargeable Li-Ion or 10.6Ah rechargeable Li-Ion; or 5 to 36V via cable control

NOVA C

Nova C is a sturdy and attractive transmitter designed to fit a broad variety of applications, it’s ideal for loader cranes, overhead cranes, concrete pumps and other mobile equipment.
Controls can be configured to application needs: combination of paddle levers, switches and buttons.
Integrated display with optional sunlight readable TFT colour display.

Dimensions:	H: 143mm x W: 242mm x D: 164mm
Weight:	Max. 2.2Kg (2.3 lbs.); depends on configuration
Power supply	2x 3.7V Li-ion rechargeable
Frequency	4xxMHz, 8xxMHz (FHSS), 9xxMHz(FHSS), 1.2GHz and 2.4GHz (FHSS)
Operating range	Typical line of sight > 250m. Varies depending RF output.

BELLY PACK TRANSMITTERS

GL/GL-3

FEATURES

- Lightweight & sturdy
- Ergonomically designed
- Operator friendly
- Colour display optional

The GL and GL-3 are designed to meet harsh environment applications with a sturdy look and feel. No compromises are made in regard to functionality and operator friendliness.
The GL is highly configurable and is available with up to three dual-axis joysticks (digital or proportional) or with up to six fully proportional paddle levers.

Dimensions:	180mm x 297mm x 178mm
Power supply	9.6 NiMH Rechargeable Battery
Frequency	4xxMHz
Operating range	100m

GR

FEATURES

- Ergonomic, harsh environment, heavy duty transmitter for complex multi-function applications
- Configurable: Joysticks, Paddle Levers, Toggle Switches, Push Buttons, Key Switch, STOP Switch and other options
- Supports Multi Frequencies
- Active & Passive STOP function
- Large control Panel

Typical Applications:
• Tower Cranes • Material Handling • Overhead Cranes • Work Platforms
• Container Handling • Specialty Applications

Dimensions:	H: 185mm (7.3”) W: 285mm (11.2”) D: 195mm (7.7”)
Weight:	2.55kg (5.6lbs) depending on configuration
Operation range:	Up to 100m (300ft)
Frequency:	4xxMHz, 8xxMHz, 9xxMHz and 2.4GHz
Power supply	3.6V NiMH/ 3.7V Li-Ion rechargeable battery or Cable Control 5V-36V DC.

INDUSTRIAL TABLET TRANSMITTER

TACTUS GEN +1

Tactus is a new family of industrial tablet safety controllers designed to meet the requirements of a multitude of markets looking for innovative ergonomic control solutions. The design allows the controller to be docked, used as a fixed control station or alternatively as a mobile wireless controller. Suitable for many applications, such as, industrial drones, horizontal drilling machines and other mobile heavy industry construction equipment.

Dimensions:	H: 123mm x W: 391mm x D: 248mm
Weight:	2.3kg (5.07 lbs) without battery
Operation range:	Typical Min. 250m line of sight using 10mW RF and standard antenna
Frequency:	410-480MHz, 860-927MHz, 1.2GHz, 2.4GHz with frequency management
Power supply	7.4V 20Ah Li-ion rechargeable and detachable battery for controller

RECEIVERS - MFSHL

Dimensions	AC8 h90 x w98 x d56mm
	AC16 h90 x w143 x d56mm
Power supply	24-230 VAC
Frequency	868, 915 MHz or 2.4GHz
Max inputs/outputs	AC8 8 digital outputs AC16 16 digital outputs, 3 digital inputs
Operating range	30m

MFSHL - AC8 / AC16

- Multiple frequency sharing
- H-Link integrated
- Solid state outputs
- Available in relay output version

Compact and lightweight, the MFSHL AC receivers offer the simplicity and convenience of quick disconnect with from eight to sixteen solid state outputs. The receiver has a LED diagnostics for power operation, Tx reception, main content errors and memory error.

Dimensions	h148 x w118 x d36mm
Power supply	12-24 VDC
Frequency	868MHz, 915MHz, 2.4GHz
Max inputs/outputs	DC8 8 digital outputs • DC16 PWM 16 digital outputs, 2 proportional outputs, 2 inputs
Operating range	30m

MFSHL - DC8/DC16

- Weight: 300g (0.7lbs.)
- External Antenna
- Fully programmable using H-Link

Designed for mobile or vehicle mounted applications, the MFSHL DC8/DC16 receivers offer from 8 to16 outputs with an external antenna and diagnostic LED's. The DC8 offers eight (8) solid state outputs and the DC16 offers 16 solid state outputs that can be proportional or digital. Frequencies available range from 868Mhz to 916Mhz, 2.4Ghz and 311Mhz-315Mhz for H-Link. Power is provided via 12/24VDC.

Dimensions	h140 x w125 x d44mm
Power supply	12-24 VDC
Frequency	2.4GHz
Max inputs/outputs	CAN Protocol 4 digital outputs 4 analogue inputs
Operating range	30m

MFSHL - CAN 2.4GHZ

- H-Link Integrated
- Multiple Frequency Sharing (MFS)
- IP65 case

Main features include 2 main contact relays, up to 2 CAN Bus ports, 2 switching relay digital outputs, 4 solid state digital outputs, 4 analog inputs and an optional fused 5VDC supply output.

Dimensions	h131 x w165 x d65mm
Power supply	12-24 VDC
Frequency	2.4GHz
Max inputs/outputs	15 digital outputs, 2 proportional outputs, 4 digital inputs, 4 analogue inputs
Operating range	30m

MFSHL - DC16 2.4GHZ

- Fully programmable via H-Link
- External antenna

Embedded in a robust and impact resistant IP65 enclosure, the DC16 2.4GHz provides LED diagnostics for power/ operation, transmission signal reception and main contact error.

RECEIVERS - DIGITAL

Dimensions	h205 x w246 x d90mm
Power supply	12-24 VDC, 48-230 VAC
Frequency	4xxMHz, 8xxMHz, 9xxMHz and 2.4GHz
Max inputs/outputs	RX14 14 digital outputs • RX22 22 digital outputs RX30 30 digital outputs, 4 digital inputs
Operating range	100m (30m for 2.4GHz)

RX 14/22/30 -HL

- IP65 case
- Multiple input and output configurations available
- Can operate at a wide range of frequencies

The case is IP65 to handle harsh environments and comes with an external Miniflex antenna. Each model offers flexibility with inputs and outputs – from 14 outputs with the RX 14, 22 outputs with the RX 22 and 30 with the RX30.

Dimensions	h205 x w246 x d90mm
Power supply	12-24 VDC, 48VAC, 110-240VAC
Frequency	4xxMHz, 8xxMHz, 9xxMHz, 1.2GHz and 2.4GHz
Max inputs/outputs	14 digital ouptuts (expandable), 4 digital inputs Modular options include proportional outputs and fieldbus.
Operating range	100m (30m for 2.4GHz)

RX 14-HLM

- Compact and lightweight
- IP65 case
- Modular design for flexibility

The flagship of digital receivers, the RX 14-HLM receiver is a modular version of the standard RX 14-HL and offers the flexibility to be configured as desired with modular style power supply modules and expansion boards

RECEIVERS - PROPORTIONAL

Dimensions	h205 x w246 x d90mm
Power supply	12-24VDC, 48-240VAC
Frequency	4xxMHz, 8xxMHz, 9xxMHz and 2.4GHz
Max inputs/outputs	RX 14 20 digital outputs • RX 28 28 digital outputs 1 proportional output, 4 digital inputs
Operating range	100m (30m for 2.4GHz)

RX 14/28 PT-HL

- Quick set programming of proportional outputs
- Half and full duplex feedback
- Built-in quick disconnect connector

Enclosed in a rugged and impact resistant IP65 enclosure, these fully configurable receivers offer a combination of proportional and digital outputs. The RX 14 PT-HL offers 20 digital outputs and the RX 28 PT-HL offers 28 digital outputs.

Dimensions	h205 x w246 x d90mm
Power supply	12-24VDC, 48-240VAC
Frequency	4xxMHz, 8xxMHz, 9xxMHz and 2.4GHz
Max inputs/outputs	RX 14 18 digital outputs • RX 26 26 digital outputs 4 proportional output, 4 digital inputs
Operating range	100m (30m for 2.4GHz)

RX 14/26 PROP-HL

- Fully programmable via H-Link
- Built-in Quick Disconnect Connector
- Quick Set Programming of proportional outputs

RX 14 PROP-HL offers 2 Main Contact relays, 4 isolated proportional analog outputs, 18 switching relay digital outputs (or 26 for the RX 26 PROP-HL), 4 on/off isolated DC/AC digital inputs and an RS232 control cable interface.

RECEIVERS - PROPORTIONAL

Dimensions	h131 x w165 x d65mm
Power supply	12-24 VDC
Frequency	4xxMHz, 8xxMHz, 9xxMHz and 2.4GHz
Max inputs/outputs	4 proportional outputs, 9 digital outputs, 4 analogue inputs
Operating range	100m (30m for 2.4GHz)

RX DC-MOBILE

- IP65 case
- Multiple input and output configurations available
- Can operate at a wide range of frequencies

The case is IP65 to handle harsh environments and comes with an external Miniflex antenna. Offering four digital inputs or twelve optional digital or analog inputs using an expansion board. The RX14HL is modular with extreme flexibility offering a wide range of digital outputs from fourteen to thirty or option for up to four proportional or six analog outputs.

Dimensions	h205 x w246 x d90mm
Power supply	12-24 VDC
Frequency	4xxMHz, 8xxMHz, 9xxMHz, 1.2GHz and 2.4GHz
Max inputs/outputs	"CAN Protocol 24 digital outputs 8 proportional outputs (PWM/VC) 8 analogue inputs"
Operating range	100m (30m for 2.4GHz)

RX BMS-HL / BMS-2

- Expandable to customer need
- Full analogue and digital capability
- Danfoss voltage requirements

Rugged and reliable, the BMS - HL offers twelve relay outputs, modular expandability, full analogue and digital capability and cable backup capability. The BMS - HL operates with 12/24 VDC supply and has LED diagnostics on board. The BMS - 2 receiver is as versatile as the BMS - HL with twelve solid state FET outputs, up to six inputs, CAN interface capability and up to eight integrated proportional outputs.

Dimensions	h205 x w246 x d90mm
Power supply	12-24 VDC
Frequency	4xxMHz, 8xxMHz, 9xxMHz, 1.2GHz and 2.4GHz
Max inputs/outputs	12 digital outputs 8 proportional outputs (PWM/VC) 16 analogue/digital inputs
Operating range	100m (30m for 2.4GHz)
RX ES	

RX MLC-HL

- Multiple frequencies
- Digital or Proportional

MLC-HL receivers offer digital or proportional (Voltage Control or PWM) or a combination of both, RS232 and CAN. With eight analogue or digital inputs the MLC-HL is fully programmable.

RECEIVERS - FIELD BUS COMMUNICATION

RX ES

RX ES receivers are designed to work with applications that require bus communication, namely, ProfiNet, Profibus RS485/232, Modbus, DeviceNet or Ethernet.

Dimensions	h131 x w165 x d65mm
Power supply	12-24 VDC
Frequency	4xxMHz, 8xxMHz, 9xxMHz and 2.4GHz
Max inputs/outputs	Bus protocols include Profinet, Profibus (RS485/232, Modbus) Devicenet, Ethernet
Operating range	100m (30m for 2.4GHz)

RX ES-CAN-HL

Features

- Multiple CAN communication
- Customised CAN protocols

For more complex operations, the CAN-HL control interfaces are 2 x CANOpen or J1939 or Generic CAN or Parker IQAN or RS232. With up to four analogue or digital inputs, the CAN-HL receiver can operate multiple frequencies.

Dimensions	h131 x w165 x d65mm
Power supply	12-24 VDC
Frequency	4xxMHz, 8xxMHz, 9xxMHz, 1.2GHz and 2.4GHz
Max inputs/outputs	CAN Protocol 4 digital outputs, 4 analogue inputs
Operating range	100m (varies depending on output)

RX ES-PROFINET

RX ES- PROFINET can be easily configured and connected through an RJ45 port to a vast range of industrial equipment that require fast data exchange using Profinet communication protocol. RX ES-PROFINET-HL also offers two (2) monitored safety rated Main Contact relays, two (2) switching relay digital outputs and optional RS232 control cable interface.

Dimensions	h131 x w165 x d65mm
Power supply	12-24 VDC
Frequency	4xxMHz, 8xxMHz, 9xxMHz, 1.2GHz and 2.4GHz
Max inputs/outputs	Profinet Protocol 2 digital outputs
Operating range	Standard 150m with 10mW RF Power. Other options available

RX ES-HL (MODBUS TCP, ETHERNET IP, ETHERCAT)

Enclosed in rugged IP65 cases these field bus communication receivers can be easily configured and connected via an RJ45 port to a vast range of industrial equipment that require fast data exchange using Modbus TCP, EhterNET IP or EtherCAT protocol. They also offer two (2) monitored safety rated Main Contact relays, two (2) switching relay digital outputs and optional RS232 control cable interface.

Dimensions	h131 x w165 x d65mm
Power supply	12-24 VDC
Frequency	4xxMHz, 8xxMHz, 9xxMHz, 1.2GHz and 2.4GHz
Max inputs/outputs	Modbus, Ethernet, Ethercat Protocol
Operating range	100m (30m for 2.4GHz)

RECEIVERS - FIELD BUS COMMUNICATION

RS232:

For point-to-point short distance communication, the RS-232 serial receiver may be the ideal solution for your application. The receiver will match your transmitter to meet your application requirements. The RS232 receiver links control, has full analog/digital capability and full feedback as standard features.

RS485

RS485: The RS485 serial communication standard is similar to the RS232 standard but was developed to meet the need for longer cable lengths, increased throughput and control of multiple devices. If your application calls for longer distance remote control and connection to multiple devices, the RS-485 receiver may be the right solution for your needs.

MODBUS

MODBUS is a popular industrial protocol used in a wide range of industrial automation equipment. MODBUS can run over virtually all communication media which means it can be implemented in new or existing applications with relative ease. It is simple, inexpensive and easy-to-use.

PROFIBUS

PROFIBUS (Process Field Bus) is a smart, field-bus technology that connects devices on the system to a central line. Devices can communicate information in an efficient manner but can go beyond automation messages. PROFIBUS devices can also participate in self-diagnosis and connection diagnosis.

DEVICENET

DEVICENET is a simple open network system to interconnect devices for data exchange. It utilizes the Common Industrial Protocol over a controller area Network.

Power supply	12/24VDC
Frequency	4XX 868MHznor 1.2,2.4GHz
Communication	R232, RS485, MODBUS, PROFIBUS and DEVICENET

EXPLOSION PROOF RECEIVERS

Power supply	3 AA batteries or 1 3.6V Rechargeable Battery
Frequency	4XX, 868, or 915MHz or 2.4Ghz
Operating range	30 or 100m
Dimensions:	236mm x 65mm x 104mm

Power supply	1 x 3.7V 3450 mAh Rechargeable Long life Li-ion Battery
Frequency	4xxMHz, 8xxMHz, 9xxMHz and 2.4GHz
Operating range	30 or 100m

Dimensions: height	160mm x 246.5mm x 88mm
Power supply	12 & 24 VDC
Frequency	4XX, 868MHz or 1.2, 2.4GHz
Max outputs / inputs	20 Outputs and 16 Inputs
Operating range	100m

ZONE 1 & 2 GAS

- Custom designed to meet customer applications
- Tested and Certified for EX

Custom designed to meet Hazardous Zone 1 & 2 Gas receivers are made to customer specific applications. The EX marking for these zones include II 2G Ex d [Ex ia Ga/ib Gb] IIC T6 Gb and is offered in Type Size 4, 5 and 6. Hetronic also offers Zone 1 & 2 Gas receivers with Exe in the same type sizes.

ZONE 2 GAS

- Custom designed to meet or exceed EX
- Special GRP enclosures available in two sizes

Designed to meet customers' specific hazardous zone requirements, Hetronic will provide GRP Enclosures in two different sizes. For EX Marking requiring II 3G Ex nR (1a IIC Gb) IIC T4 Gc, Hetronic can provide receivers that are not only tested and certified to EX but will design the right receiver features to deliver the best possible transmitter/receiver combination possible.

ZONE 21 AND 22 DUST

- Can provide EX II 2D, II 2D exe and II 3D
- Customized to meet specific EX requirements
- Decoders available for enclosures listed
- Cable control option available

Hetronic Explosion proof (EX) receivers are ATEX, NEC, and FM approved. For hazardous Zone 21 & 22 Dust we will design and deliver a solution that meets your specific requirements. Hetronic can provide the EX receiver in enclosures that range from Exd type Size 4,5 and 6 to Exd with Exe or GRP enclosures in two sizes.

GRP ENCLOSURE

-IP65 rating
-Sizes up to h120 x w400 x d250mm

GRP enclosures are used on Hetronic Ex receivers for Zone 2 Gas and Zone 22 Dust classified environments. A Restricted Breathing Safety Concept approach ensures that the possibility of entry of a surrounding explosive Gas/Dust atmosphere which is typically less than 10hrs a year is reduced to a low level.

EXPLOSION PROOF TRANSMITTERS

NOVA-XL SERIES RADIO REMOTE CONTROLS

Field proven in harsh environments, offers a larger control panel up to 4 joysticks and other controls. Capable of feedback via LED's or viewable LCD.

GL-2 SERIES REMOTE CONTROLS

Designed for medium to heavy duty applications. Offers dual level control panel for improved performance with or without gloves. Available option with cable control.

NOVA-L SERIES RADIO REMOTE CONTROLS

Compact, Rugged and ergonomically designed for ultimate operator performance. Configurable with up to 2 joysticks for specific applications.

GL-3 SERIES RADIO REMOTE CONTROLS

Designed with enough space for feedback via LED's and LCD display. Heavy duty, field proven GL-3 can be optionally equipped with cable control.

GR SERIES RADIO REMOTE CONTROLS

A workhorse transmitter for any environment, the GR offers extra space for a variety of control elements. Available with feedback on LCD display or LED's and optional cable control. Ergonomically designed for operator comfort and control with chest plate or waist belt.

ERGO-F HANDHELD RADIO REMOTE CONTROLS

The ERGO-F transmitter is a one-hand controller designed to meet the most rugged of applications. ERGO-F comes standard with a highly readable display for machine feedback and immediate button response. Hetronic key switch with RFID technology offers a wide range of options for operator safety.

HETRONIC EXPLOSION PROOF TRANSMITTER SUMMARY

Certification	EQUIPMENT GROUP	Ex MARKING	TYPE
ATEX	Mining M1 & M2	I M1 Ex ia I Ma	NOVA-L, NOVA-XL, GL-2, GL-3, GR, with cable control option
ATEX	Zone 1 & 2 Gas	II 2G Ex ia IIC T4 Gb	NOVA-L, NOVA-XL, GL-2, GL-3, GR, with cable control option
ATEX	Zone 21 & 22 Dust	II 2D Ex ia IIIC T130°C Db	NOVA-L, NOVA-XL, GL-2, GL-3, GR, with cable control option
IECEx	Mining M1 & M2	Ex ia I Ma	NOVA-L, NOVA-XL, GL-2, GL-3, GR, with cable control option
IECEx	Zone 1 & 2 Gas	Ex ia IIC T4 Gb	NOVA-L, NOVA-XL, GL-2, GL-3, GR, with cable control option
IECEx	Zone 21 & 22 Dust	Ex ia IIIC T130°C Db	NOVA-L, NOVA-XL, GL-2, GL-3, GR, with cable control option
UL/CSA	Class I	Division 1, 2/Groups A-D/T4	NOVA-L, NOVA-XL, GL-2, GL-3, GR, ERGO-F
UL/CSA	Class II, III	Class II, III Division 1, 2/Groups E-G/ T4	NOVA-L, NOVA-XL, GL-2, GL-3, GR, ERGO-F
INMETRO	Mining M1 & M2	Ex ia I Ma	NOVA-L, NOVA-XL, GL-2, GL-3, GR
INMETRO	Zone 1 & 2 Gas	Ex ia IIC T4 Gb	NOVA-L, NOVA-XL, GL-2, GL-3, GR
INMETRO	Zone 21 & 22 Dust	Ex ia IIIC T130°C Db	NOVA-L, NOVA-XL, GL-2, GL-3, GR
ATEX	Mining M2	I M2 Ex ia I Ma	ERGO-F
ATEX	Zone 1 & 2 Gas	II 2G Ex ib IIC T4 Gb	ERGO-F
ATEX	Zone 21 & 22 Dust	II 2D Ex ib D21 T135°C	ERGO-F
ATEX	Mining M2	I M2 Ex ia I Mb	ERGO-F 21 MFS
ATEX	Zone 2 Gas	II 3G Ex ic IIC T4 Gc	ERGO
ATEX	Zone 22 Dust	II 3D Ex ic IIIC T130°C Dc	ERGO
GRP AND Ex d RECEIVERS			
ATEX	Zone 1 & 2 Gas	II 2G Ex db [Ex ia Ga/Gb] IIC T6 Gb	Ex d Enclosure Sizes 4,5,6
ATEX	Zone 1 & 2 Gas	II 2G Ex db e [Ex ia Ga/Gb] IIC T6 Gb	Ex d Enclosure Sizes 4,5,6 with Ex e
ATEX	Zone 21 & 22 Dust	II 2D Ex tb [Ex ia Da/Db] IIIC T125°C Db	Ex d Enclosure Sizes 4,5,6
IECEx	Zone 1 & 2 Gas	Ex db [Ex ia Ga/Gb] IIC T6 Gb	Ex d Enclosure Sizes 4,5,6
IECEx	Zone 1 & 2 Gas	Ex db e [Ex ia Ga/Gb] IIC T6 Gb	Ex d Enclosure Sizes 4,5,6 with Ex e
IECEx	Zone 21 & 22 Dust	Ex tb [Ex ia Da/Db] IIIC T125°C Db	Ex d Enclosure Sizes 4,5,6
UL/CSA	Zone 21 & 22 Dust	Ex tb e [Ex ia Da/ ib Db] IIIC T125°C Db	Other Enclosure types are used
ATEX	Zone 2 Gas	II 3G Ex nR (ia IIC Gb) IIC T4 Gc	GRP Enclosure 255x250x120mm & 400x250x120mm
ATEX	Zone 22 Dust	II 3D Ex tc (ia IIIC Db) IIIC T125°C Dc	GRP Enclosure 255x250x120mm & 400x250x120mm

Hydrastore
Hydraulic Systems & Components

Online shop now open

Every stock item in this catalogue is now available online for next day delivery www.hydrastore.co.uk/shop

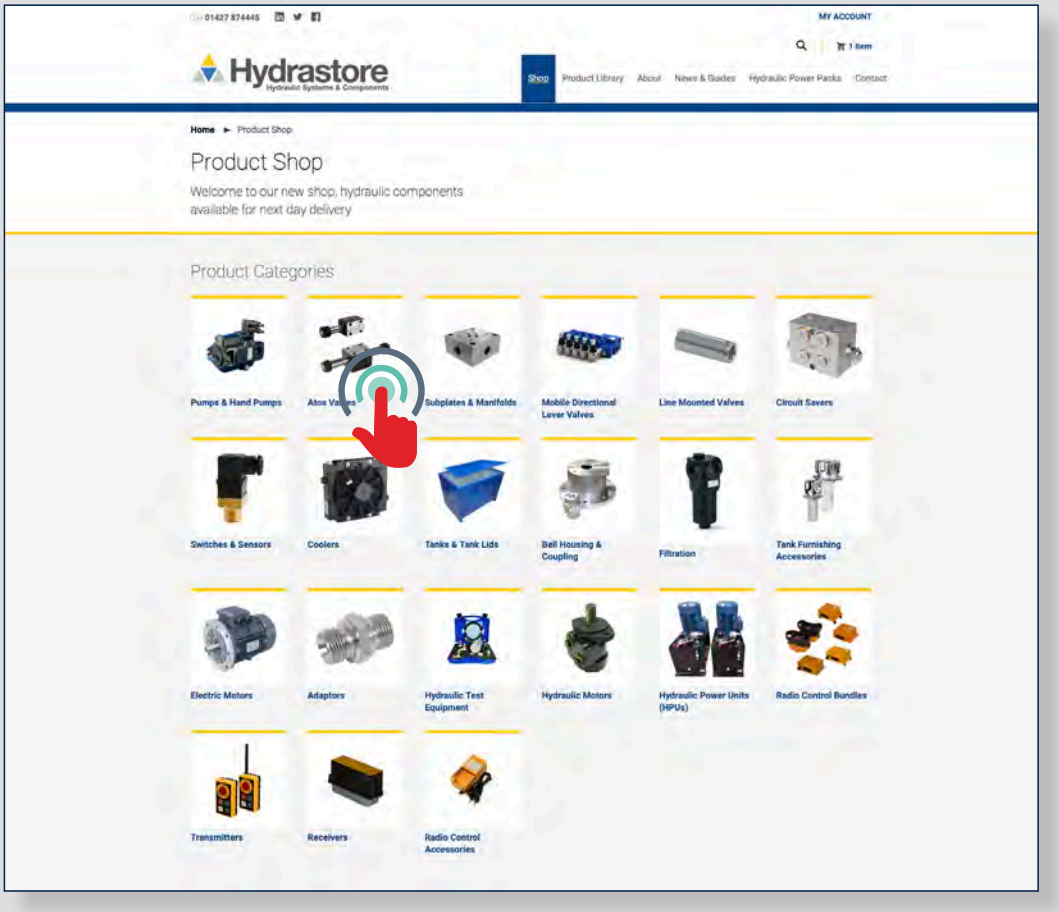

The main index menu is designed and categorised for quick and easy product selection...

Select 'Radio Control'

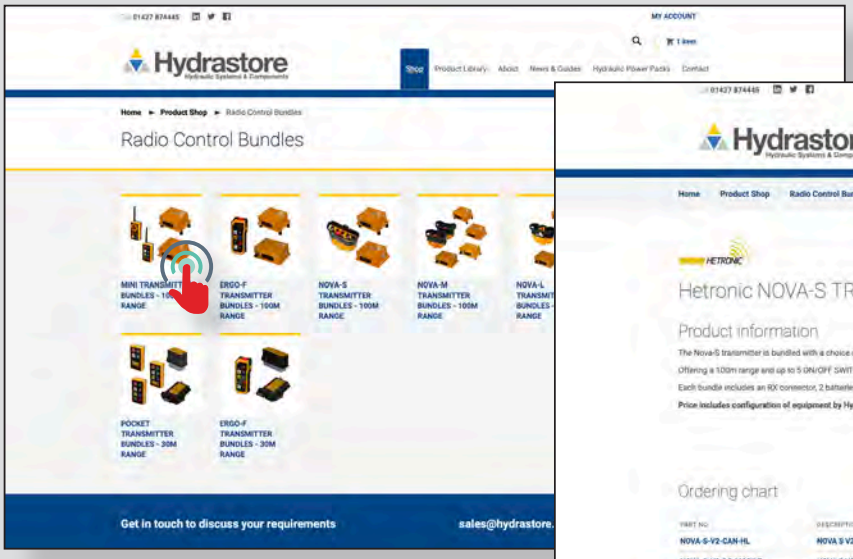

Select the item you need...

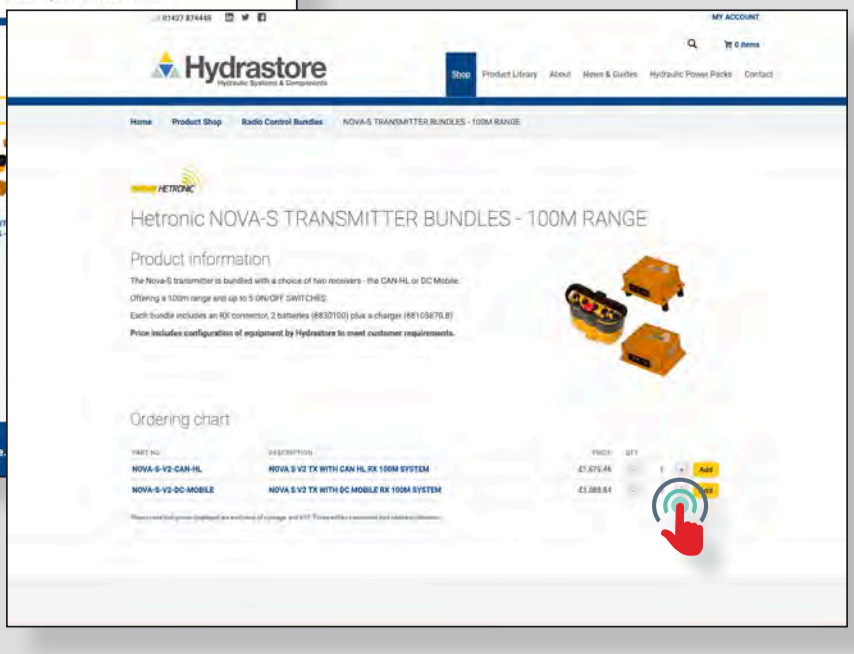

Select quantity from the options, add to basket, checkout, delivered!

Electronic control overview

CONTROLLERS - DANFOSS	298
CONTROLLERS - EXTERUS	299
DISPLAYS - DANFOSS	301
DISPLAYS - EXTERUS	302
JOYSTICKS - DANFOSS	303
FOOT PEDALS - DANFOSS	303
HMR CAN ROTARY	303
PLUS+1® SOFTWARE	304
PLUS+1® CONTROLLERS	305
PLUS+1® DISPLAYS	306
PLUS+1® JOYSTICKS & FOOTPEDALS	307
PLUS+1® OPERATOR INTERFACES	308
PLUS+1® CONNECT	309
PLUS+1® AUTONOMY	310
PLUS+1® SENSORS	311
PLUS+1® SUPPORT	312

CONTROLLERS - DANFOSS

PLUS 1 MC MICROCONTROLLERS

Features and benefits

- Large Input and Output capabilities, expandable architecture.
- 6 I/O configurations in 4 housing sizes and nine total I/O configurations for multiple control options – the building blocks for almost every function.
- High speed DSP technology to process even the most complex applications.
- Stackable microcontrollers for high mounting flexibility.
- CAN-based communications for state-of-the art control performance.

PLUS 1 SC MICROCONTROLLERS

Features and benefits

- Larger memory capacity
- Packaged in an environmental resistant form.
- Enhanced input/output flexibility
- Smart digital inputs
- PWM output frequency up to 20,000 Hz
- Separate PWM frequencies for each output
- Configurable sensor power from 3 to 12 volt
- Low power mode
- Low supply voltage (7 volts) stays running through engine crank

PLUS 1 HIGH CURRENT CONTROLLER

Features of the MC018

- Maximum power output of 160A, with the ability to drive 120A simultaneously
- Maximum power output per pin of 25A
- Up to 20KHz PWM frequency at reduced load
- Separate logic power supply
- Easily installed power lugs
- Soft fuses configurable in PLUS+1® GUIDE

PLUS 1 INPUT/OUTPUT MODULES

Features and benefits

- 12 and 24-pin housings with five possible configurations
- Stackable design for optimum mounting flexibility
- Suitable for the control system needs of your entire vehicle range, from simple to sophisticated

PLUS 1 XL CONTROLLER

Features and benefits

48 inputs and 40 outpus

- User-programmed with PLUS+1® GUIDE and C Open
- 4 pin DEUTSCH DTP connector for power and ground
- 2 x 50 pin DEUTSCH DRC connectors
- Processor: AURIX 32 bit running at 200 MHz 2.5 MB flash, 240kB RAM, Lock Step Core
- External memory: - 32 kB EEPROM non-volatile memory - 64 MB Flash vault memory
- 12 bit analog-to-digital converter
- 7 to 36 Vdc power supply, monitored internally
- Sensor power output for external sensors each are rated at 5 Vdc to 500mA: - 1x 5V Fixed - 1x 3V to 12V variable
- 3 CAN 2.0B ports • SIL2 compliant

EXERTUS

CONTROLLERS - EXTERUS

CCM1100S CONTROLLER

- 38 I/O, 96 kB RAM, 1 MB flash
- IP67, -40...+85°C operating
- 1 CAN
- Guitu programmable
- Intelligent node (through firmware)

HCM3210S CONTROLLER

- 20 I/O
- IP67, -40...+85°C operating
- 1 CAN
- Intelligent node (through firmware)

HCM2010S CONTROLLER

- 64 I/O
- IP67, -40...+85°C operating
- 3 CAN, RS232
- Intelligent node (through firmware)
- GUITU programmable

HCM2110S CONTROLLER

- 52 I/O
- IP67, -40...+85°C operating
- 1 CAN
- H-Bridge
- 3A, 6A, 8A and 10A outputs (high & low)
- simultaneous maximum load: 120A
- Intelligent node (through firmware)

MIC2100S CONTROLLER

- 45 I/Os, 2 GB DDR RAM, 8 GB Flash
- IP67, -40...+85 °C Operating temp.
- 2 remote display connectors
- 4 x CAN, 1000 gb LAN, 2 x RS232. USB
- 4 Composite video inputs
- GUITU programmable
- Audio output
- Support for 3D graphics

MIC1100S CONTROLLER

- 40 I/O, 128 MB RAM, 256 MB flash
- IP67, -40...+85°C Operating
- 2 remote display connectors
- 3 CAN, LAN, 2 RS232, USB
- 4 composite video inputs
- Guitu programmable

ECM2020 CONTROLLER

- Edge computing module
- IP67, -40 ... +85°C
- 3 x CAN interface, LAN and WiFi or 3G
- Remote display
- Guitu programmable
- 10 inputs and outputs
- GPS (included in 3G option)

EXERTUS

CONTROLLERS - EXTERUS

HCM4100S SENSOR

- 20 I/O
- IP67, -40...+85°C operating
- 1 CAN
- 2 axis inclinometer
- Intelligent node (through firmware)

HCM4100S1 SENSOR

- 20 I/O
- IP67, -40...+85°C operating
- 2 axis inclinometer
- Gyro
- Intelligent node (through firmware)

CH8SH INTERFACE DEVICE

- 8 port CAN hub
- IP67, -40...+85°C operating

DISPLAYS - DANFOSS

DM1X00 SERIES

Features and benefits

- 16:9 wide screen ratio (1280 x 800 resolution)
- Advanced camera solutions viewing up to 4 cameras and while displaying up to 2 at the time
- Ethernet, USB 2.0 high speed
- Option for WiFi, Bluetooth® and GNSS
- Options for keypad with either 8 buttons on each side (16 total) or 8 buttons plus navigation panel (16 total)
- Multicolor optical signal (2 RGB LEDs)
- Easy programming with the PLUS+1® Widget library

DP700 SERIES

Features and benefits

- 7” high resolution TFT display
- 800 x 480 pixels
- 18 bit color resolution
- IP 67 for outdoor use
- Two optional video inputs with both PAL and NTSC support
- Keypad with 14 buttons (8 soft-keys and 6 buttons for menu navigation) all with white backlight design for low light and night use

DM430E SERIES

Features and benefits

- Rugged IP66 and IP67-ratings (front and back)
- 16:9 wide screen ratio (480 x 272 resolution)
- Backlit buttons and up to 6 LED indicators
- 2 different keypads (traditional 4-button or 11-button navigation layout)
- Flexible solution for adding up to 2 CAN bus channels or 5 inputs for auxiliary functions
- PLUS+1® GUIDE programmable (vector-based screen editor)
- USB device and RS232 (optional)

DM700 SERIES

Features and benefits

- Rugged IP66 and IP67-ratings (front and back)
- 16:9 wide screen ratio (800x480 resolution)
- Red and Green LED indicators
- Flexible options for 2 CAN ports, 2 Analog Camera Inputs, USB Host 2.0, and Ethernet
- PDF viewer, file browser, media player, and optional 32MB Applog
- Supports direct RAM® mount or bracket mount
- PLUS+1® GUIDE programmable (vector-based screen editor)

DISPLAYS - EXTERUS

CCD1200S DISPLAY
- 3.5” colour TFT, fascia label buttons
- 320 x 240 resolution
- Includes PLC with 38 I/O
- IP67
- RS232
- Bluetooth
- GUITU programmable

CDC2000X DISPLAY
- 3.5” colour TFT, Fascia label buttons
- 320 x 240 resolution
- Includes PLC with 33 I/O
- IP67
- 2x CAN, USB, RS232

MID070S DISPLAY
- 7” colour WVGA TFT, Fascia label buttons
- Capacitive touch screen
- 800 x 480 resolution
- Includes PLC with 37 I/O
- IP67
- Ethernet, USB, 3x CAN, RS232
- 4x composite video inputs

RD070SV DISPLAY
- 12.1” colour TFT, scroll wheel
- 480 x 800 resolution
- IP67
- Is used with MIC1100S or MIC2000S

RD084S2 DISPLAY
- 12.1” colour TFT
- 800 x 600 resolution
- IP67
- Is used with MIC1100S or MIC2000S

RD121S2 DISPLAY
- 12.1” colour TFT
- 800 x 600 resolution
- IP67
- Is used with MIC1100S or MIC2000S

RD121S3 TOUCH DISPLAY
- 12.1” colour TFT
- Capacitive touch screen
- 800 x 600 resolution
- IP67
- Is used with MIC1100S or MIC2000S

JOYSTICKS - DANFOSS

JS1000

- Contactless hall effect sensing
- Single or dual axis
- Outputs – Analog, CAN (J1939, CANopen)
- Up to IP66/67 environmental sealing above and below panel
- Grip options – Ball grip, grip with rocker switch, grip with banana switch, PRO grip

JS1-H

Heavy-duty joysticks Features

- Rugged design up to IP66 overall
- Single and dual axis spring-return
- Single axis w/ adjust. Friction-hold
- 5 different output types: CAN (J1939, CANopen), CAN+ and CANalog PVE and Analog, PWM
- 5 different grip types: ST2- ST7- PR2- PR7*)- and HR1-grip
- EMI/RFI: 150V/m
- ESD: 20kV

FOOT PEDALS - DANFOSS

KEP

- Uni-directional pedal travel 16˚ or 17˚
- Analog output options, 16 Vdc supply maximum
- 10% to 90%
- Pedal angle options: - 28˚, - 35˚, - 45˚
- Ingress Protection IP66l

KEP3

- Bi-directional pedal travel ±14°
- Analog output options, 5 Vdc supply
- 10% to 90%
- Ingress Protection IP66

HMR CAN ROTARY

- CAN Rotary device for external screen navigation and machine control. The next level in operator comfort and machine modernization
- Online configurator with almost 5,000 different icons as per ISO 7000, or fully customized for a truly unique appearance
- Intuitive five-finger control, allowing for “blind” operation of the device
- CAN controlled RGB LEDs provide give the flexibility to easily customize each button for colour and frequency
- Simpler system design and faster development cycles with PLUS+1® toolchain
- PLUS+1 Partner Program for fast integration of CAN Keypads

PLUS+1® SOFTWARE

FAST. EASY. OPEN.

PLUS+1 GUIDE and PLUS+1 Service Tool are the foundation of the PLUS+1 Platform.
Engineered to accelerate your development process and bring higher quality machines to market faster.
Build your application with drag-and-drop logical components or software blocks in the PLUS+1 GUIDE graphical interface. Get started today with a free Express license or 90-day Professional trial of PLUS+1 GUIDE and Service Tool.

- The PLUS+1 Platform is specifically designed for mobile control, giving you tools to bring your machine applications to market faster
- The simple and intuitive interface makes PLUS+1 GUIDE and Service Tool easy to learn
- Import any existing IEC 61131-3 language, or C-code programs with the openness of the PLUS+1 Platform
- PLUS+1 Compliance - Choose from hundreds of function blocks/libraries specifically designed for mobile control
- Go to market faster with a variety of PLUS+1 off-the-shelf sub-system applications
- Functional Safety ready – Fulfils requirements for IEC 61508:2010 support tool certification
- Service your machines wired or wirelessly with the very powerful PLUS+1 Service Tool or PLUS+1 Mobile solution

PLUS+1 GUIDE

PLUS+1 Learning and Support

PLUS+1 Service Tool

PLUS+1 Mobile Service Tool

PLUS+1® CONTROLLERS

INTELLIGENT VEHICLE CONTROL

Our PLUS+1 controllers are the brains behind intelligent vehicle control. Swiftly programmable to your specific requirements. Our powerful PLUS+1 microcontrollers bring intelligence to every node of a distributed control system. Thanks to their rugged design, they'll withstand the toughest conditions your vehicle comes up against.
Programming our controllers requires minimum effort with our easy-to-learn PLUS+1 GUIDE software.

- Hardware specifically designed for mobile use
- High speed technology to process even the most complex applications
- Software-configurable universal I/O for multiple control options
- Simpler system design and faster development cycles with PLUS+1 toolchain
- SC/XL controllers are SIL 2 capable (Safety Integrity Level 2 according to IEC 61508)
- C-open capability and high current driver options on some controller

PLUS+1 safety SC microcontrollers

PLUS+1 MC microcontrollers

PLUS+1 input/output expansion modules

PLUS+1 high current controllers

PLUS+1 XL controllers

PLUS+1® DISPLAYS

MONITORING, CONTROL AND DIAGNOSTICS

Monitoring vehicle performance has never been easier. Our displays give a customized all-in-one overview of your vehicle's CAN-based network. Just what operators need for continuous monitoring, control and diagnostics.
Many options are available with our PLUS+1 programmable displays – from plug and play to customized operator interfaces with optional external video.
All our displays have one thing in common: they provide an integrated operating network that brings the entire hydraulic system on your vehicle together. Whatever your needs, our displays can monitor every hydraulically-controlled detail, from oil pressure to machine angles.

- Supreme viewability with high brightness and optical bonding
- Touch technology and/or multiple button configuration options
- Multiple connectivity options
- Simpler screen design with PLUS+1 toolchain and widget libraries
- Certification for Marine application use with our DM430M
- CAN Rotary device for external screen navigation and machine control – The next level in operator comfort and machine modernization

DM700

DM1000 & DM1200 series

HMR CAN Rotary device

DM430E series

DM430M series

PLUS+1® JOYSTICKS & FOOTPEDALS

ENDLESS CONFIGURATION POSSIBILITIES

Operators get a real feel for control with our wide range of joysticks. Endless configuration possibilities and ergonomic designs enable smooth and comfortable operation of your light or heavy-duty vehicles. With single- and dual-axis configurations and multiple mechanical and electrical interface options. Our joysticks are as versatile as they come. A complete range of modular PLUS+1 Compliant joysticks to support our intelligent mobile control solutions.

- Customizable solutions: Build your own joystick. Choose from four bases and five ergonomic grip types, with flexible button and switch placement
- PLUS+1 GUIDE Programmabilty – Remove the need for an additional controller in thesystem.
- Multiple electrical interfaces available for ease of configuration - including CAN+ (input module capability - allow up to 11 Digital/Analogue inputs)
- Superior performance: PLUS+1 Compliance enables simple and seamless futureoriented integration in the machine control system
- Faster, more flexible fulfilment times: The JS1-H standard portfolio is readily available, enabling you to reduce your warehouse stocks, including globally situated Build Centres.
- Bi-directional and uni-directional footpedals: Rugged design, high operating life, SIL 2 (Safety Integrity Level 2 according to IEC 61508)

JS1-H

JS1000

Bi-directional foot pedal

Uni-directional foot pedal

PLUS+1® OPERATOR INTERFACES

OPERATOR ERGONOMICS AND MACHINE MODERNIZATION POSSIBILITIES

We are constantly striving to provide our operators with the most ergonomic and modernized human-machine interfaces. Our Human Machine Interface (HMI) CAN-based devices combine an ergonomic, modern and rugged design, into compact solutions for both open and enclosed cabs.

- CAN Rotary device for external screen navigation and machine control. The next level in operator comfort and machine modernization
- Online configurator with almost 5,000 different icons as per ISO 7000, or fully customized for a truly unique appearance
- Intuitive five-finger control, allowing for “blind” operation of the device
- CAN controlled RGB LEDs provide give the flexibility to easily customize each button for colour and frequency
- Simpler system design and faster development cycles with PLUS+1® toolchain
- PLUS+1 Partner Program for fast integration of CAN Keypads

HMR CAN rotary devices

HMK powered by
PLUS+1 Partner Program

PLUS+1® CONNECT

LEVERAGING YOUR DATA FOR OPTIMAL PERFORMANCE

PLUS+1 Connect combines telematics hardware, software infrastructure and a userfriendly interface, on a single cloud platform; to provide one cohesive, connected experience. The platform opens the door to numerous value-adding services, from fleet management to remote diagnostics and over-the-air programming. Built-in alerts and alarms will keep you informed about the machine condition, or if a preset geo-fence is crossed. Our hardware portfolio meets a wide range of connectivity needs, via cellular services, Wi-Fi networks and/or Bluetooth connections. The PLUS+1 Connect machine monitoring platform then provides insights to optimize machine efficiency, improve productivity and facilitate servicing through data generated on site.

- Machine monitoring, diagnostics and remote updates
- Entire hardware portfolio on a single platform to meet mixed-fleet needs
- Customizable, widget-based interface with multiple dashboard levels
- Fully encrypted to ensure data security
- Easy to order digital service plans via PLUS+1 MarketPlace
- Compatible with multiple satellite navigation systems for global operability

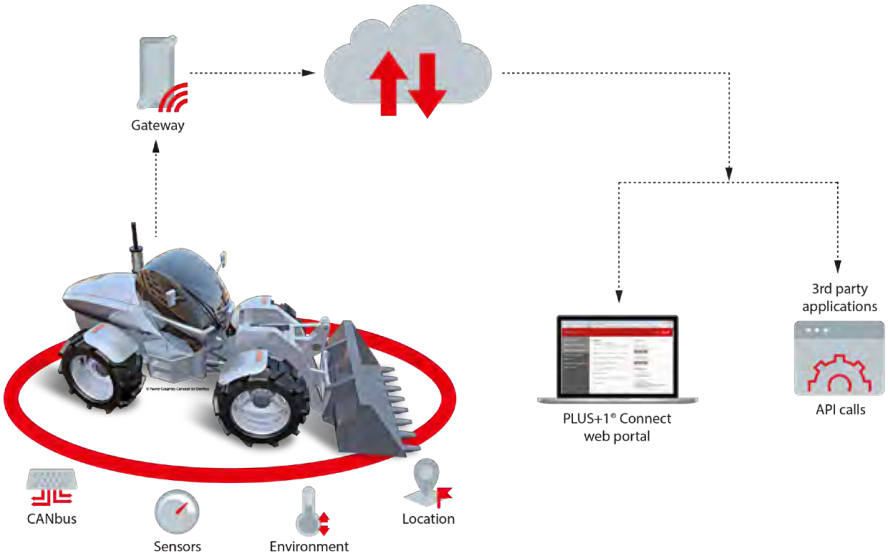

CS10 wireless gateway

CS100 cellular gateway

CS500 IoT gateway

PLUS+1® Mobile

PLUS+1 Connect Portal

PLUS+1 MarketPlace

PLUS+1® AUTONOMY

FAST-TRACK TO AUTONOMOUS MACHINE FUNCTIONS

The PLUS+1 Autonomy platform increases operator and worker safety by removing the operator from dangerous test environments and minimizing safety risks, through features such as collision avoidance. It also improves machine and operator productivity by automating navigation and work functions.

The XM100 autonomous controller, Danfoss' first autonomous hardware solution, supports customers in enabling Level-3 Autonomy and delivers the central processing power for the future of mobile machinery and development. The XM100 Controller meets the needs of autonomous machines by interfacing with GNSS systems, LiDAR, Radar and inertial sensors while carrying out autonomous navigation tasks.

With the integrated PLUS+1 Autonomous Control Library (ACL), machine manufacturers are able to add autonomous functionality to their machines without writing a single line of code, by using the pre-programmed and pre-tested function blocks, each covering key areas like perception, positioning, and navigation.

XM100 controller

PLUS+1 Autonomous Control Library

Software features:

- ✔ Obstacle detection
- ✔ Obstacle detection and avoidance
- ✔ Feature localization
- ✔ Path following

Hardware features:

- ✔ Powerful i.MX 6 QuadPlus processor
- ✔ 8 GB of flash and 2GB of DDR3RAM
- ✔ 4 CAN ports
- ✔ Interfaces for LiDAR & Radar over Ethernet (10/100)
- ✔ Integrated 6-Axis Inertial Measurement Unit
- ✔ GNSS Receiver with 1.5M CEP50 position accuracy
- ✔ Simpler system design and faster development cycles with PLUS+1 toolchain

PLUS+1® SENSORS

COMPLIANCE SUPPORT

Our temperature or pressure-detecting sensors link your machine functions directly into the control system. PLUS+1 Compliance further supports easy device integration, and contributes to precision control in all types of mobile control application.
Many of the sensors in our broad range are PLUS+1 Compliant. Contributing to precision control systems on all kinds of mobile application.

- Hall-effect and MEMS technology
- Single or redundant options
- Multiple output options, i.e. SAE J1939, Current or Ratiometric
- High burst and over pressure capabilities due to fully welded design
- SIL 2 (Safety Integrity Level 2 according to IEC 61508) pressure sensors
- Simpler system design and faster development cycles with PLUS+1 toolchain

Position sensors

Heavy-duty pressure transmitter

Temperature sensors

KPP speed sensors

PLUS+1® SUPPORT

FOR TECHNICAL SUPPORT

Getting help with your PLUS+1 requests has never been easier. A form will now guide you in creating a helpdesk case for any PLUS+1 Software, PLUS+1 Marketplace or PLUS+1 Connect request. With each new case, you will receive a case number which can be referenced for further support. Click on the PLUS+1 Helpdesk icon on the right to create your helpdesk support request.
If you are a customer that receives service from one of our distributors, please contact them for support.

Danfoss is working to become your strongest partner in Mobile Hydraulics. The PLUS+1 user forum is designed to help you find information and share your own experience. We hope this forum will become a valuable resource of knowledge and ideas for the PLUS+1 programming community. The PLUS+1 help desk team provides comments and answers to questions posted, complementing the phone and email support we already provided.

PLUS+1 Training

PLUS+1 Helpdesk

PLUS+1 User Forum

PLUS+1 YouTube channel

Electrification overview

ELECTRIC MACHINES - DANFOSS 314
ELECTRIC CONVERTERS - DANFOSS 317

ELECTRIC MACHINES - DANFOSS

Danfoss's PM range of electric machines have been specifically developed for electric or hybrid drive trains in mobile work machines, buses or marine vessels. Designed for demanding applications, Danfoss's machines are smaller, lighter and more efficient than conventional products on the market.

EM-PMI240-T180
Power range from 48 kW to 114 kW, nominal speed range from 2200 to 8800 rpm and maximum speed up to 9200 rpm.

EM-PMI375-T500
Power range from 66 kW to 158 kW, speed range from 1100 rpm up to 4000 rpm.

EM-PMI300-T310
Power range from 41 kW to 94 kW, speed range from 1100 rpm up to 4000 rpm.

EM-PMI375-T800
Power range from 85 kW to 251 kW, speed range from 900 rpm up to 4000 rpm.

EM-PMI375-T200
Power range up to 63 kW and speed range up to 4000 rpm.

EM-PMI375-T1100
Power ranges from 177 kW to 296 kW, speed range from 1200 rpm up to 4000 rpm.

EM-PMI540-T1500
Power range from 119 kW to 332 kW, speed range from 700 rpm up to 4000 rpm.

EM-PMI540-T4000
Power range from 284 kW to 896 kW, speed range from 600 rpm up to 4000 rpm.

EM-PMI540-T2000
Power range from 180 kW to 422 kW, speed range from 700 rpm up to 4000 rpm.

EM-PMI540-T3000
Power range from 395 kW to 480 kW, speed range from 1300 rpm up to 4000 rpm.

Danfoss's PME range are designed to be shorter than normal motors for applications where axial length is crucial parameter. They are designed to be connected directly to the ICE flywheel housing or to a gearbox with part of the motor being inside the flywheel housing or the gearbox for as short as possible design.

EM-PME375-T150
Power range up to 40 kW with speed range from 1500 to 2600 rpm.

EM-PME375-T200
Power range up to 50 kW with speed range from 1500 to 2600 rpm.

Note for all products

Features and benefits

- Extremely compact and robust structure
- Highest efficiency (throughout the operating range) on the market
- Low coolant flow requirements
- Coolant temperature up to +65 C
- IP65 enclosure class

ELECTRIC CONVERTERS - DANFOSS

EC-C1200-450

Features and benefits

- Extremely compact design weighing 15 kg
- High enclosure class IP67, sealed from moisture and dust
- Ambient temperature up to +105C and down to -40C
- Coolant temperature up to +65C
- Robust design withstanding high levels of mechanical vibrations and shocks
- Designed specifically for the highly cyclical loads typical in heavy mobile work machines

EC-LTS1200

Features and benefits

- Extremely compact design: 3 x 170 A unit only 58 kg
- High enclosure class IP65 – sealed from moisture and dust
- Liquid cooled with plain water or water/glycol mixture
- Ambient temperature up to +85 °C and down to -40 °C
- Allowed coolant temperature up to +65 °C
- Robust design withstanding high levels of mechanical vibrations and shocks
- Designed especially for highly cyclical loads typical in heavy mobile work machines

Hydrastore
Hydraulic Systems & Components

Hydraulic component supply

Pumps

Industrial valves

Subplates and manifolds

Mobile directional valves

Line mounted valves

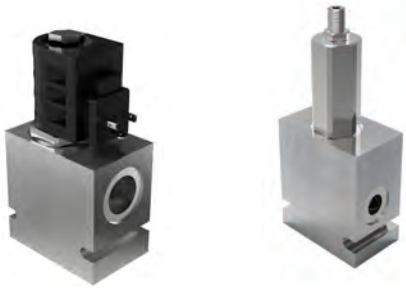

Circuit savers

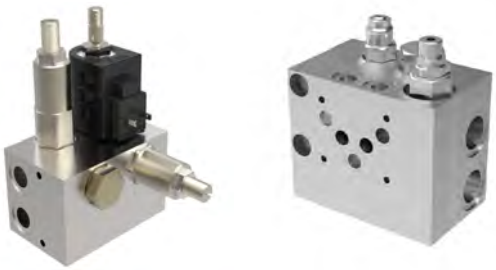

Switches and sensors

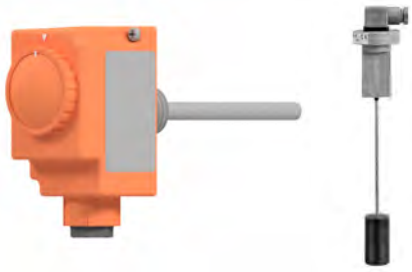

Coolers

Tanks and lids

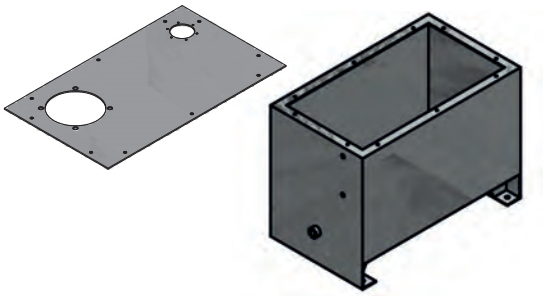

Bell housing and coupling

Tank furnishing accessories

Electric motors

Filtration

Hydraulic motors

Hydraulic powerpacks

Pressure test equipment

Hydrastore
Hydraulic Systems & Components

Hydraulic power units - design and production

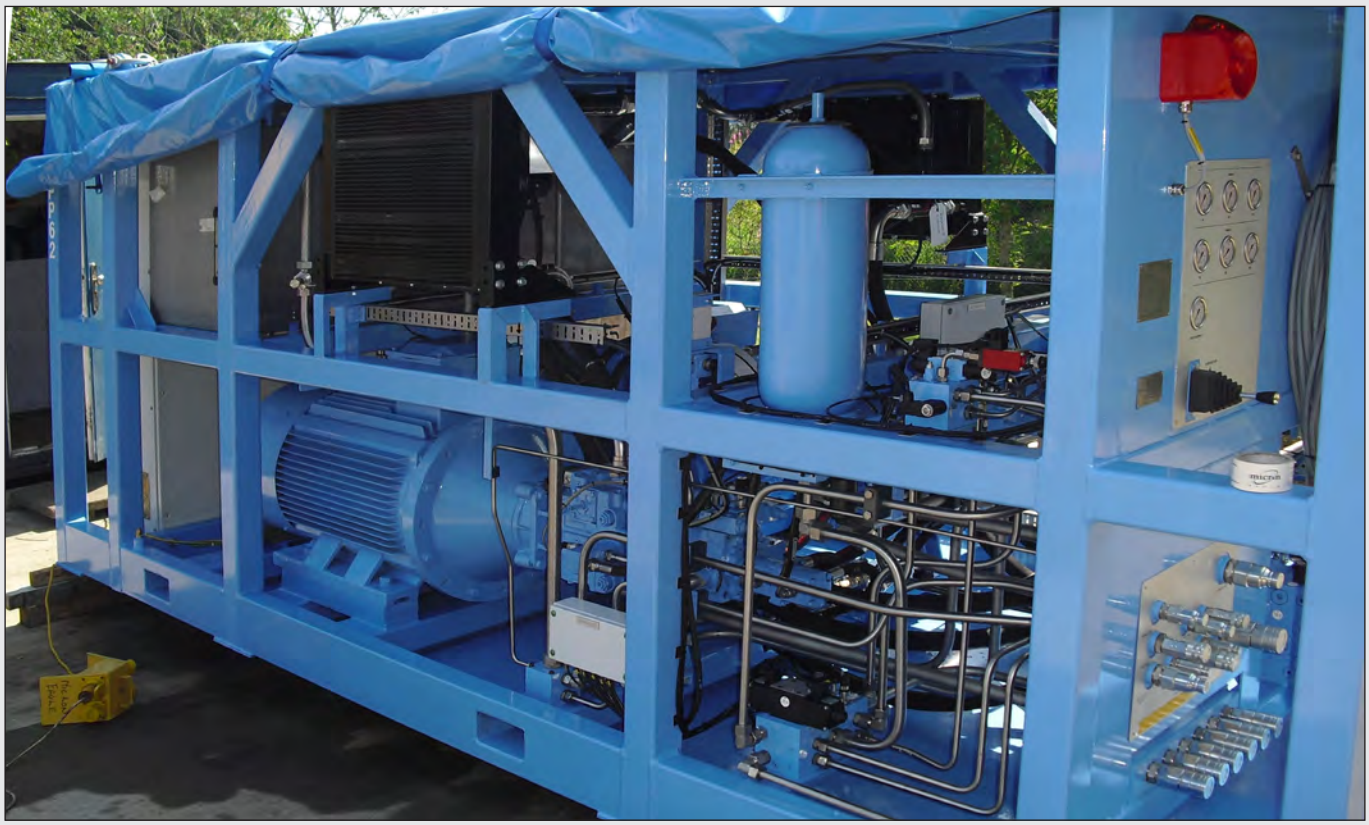

- Standard or customised solutions
- Energy efficient and functional
- Designed, built and tested in-house
- Wide range of applications

Hydrastore
Hydraulic Systems & Components

Hoses and fittings

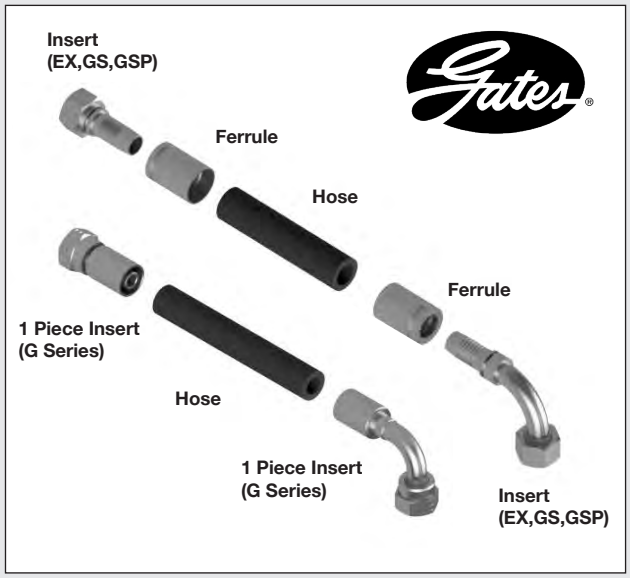

- Hydraulic & Industrial Hose
- Hose Assemblies
- Adapters, FIttings & Couplings
- Hose Kitting Services

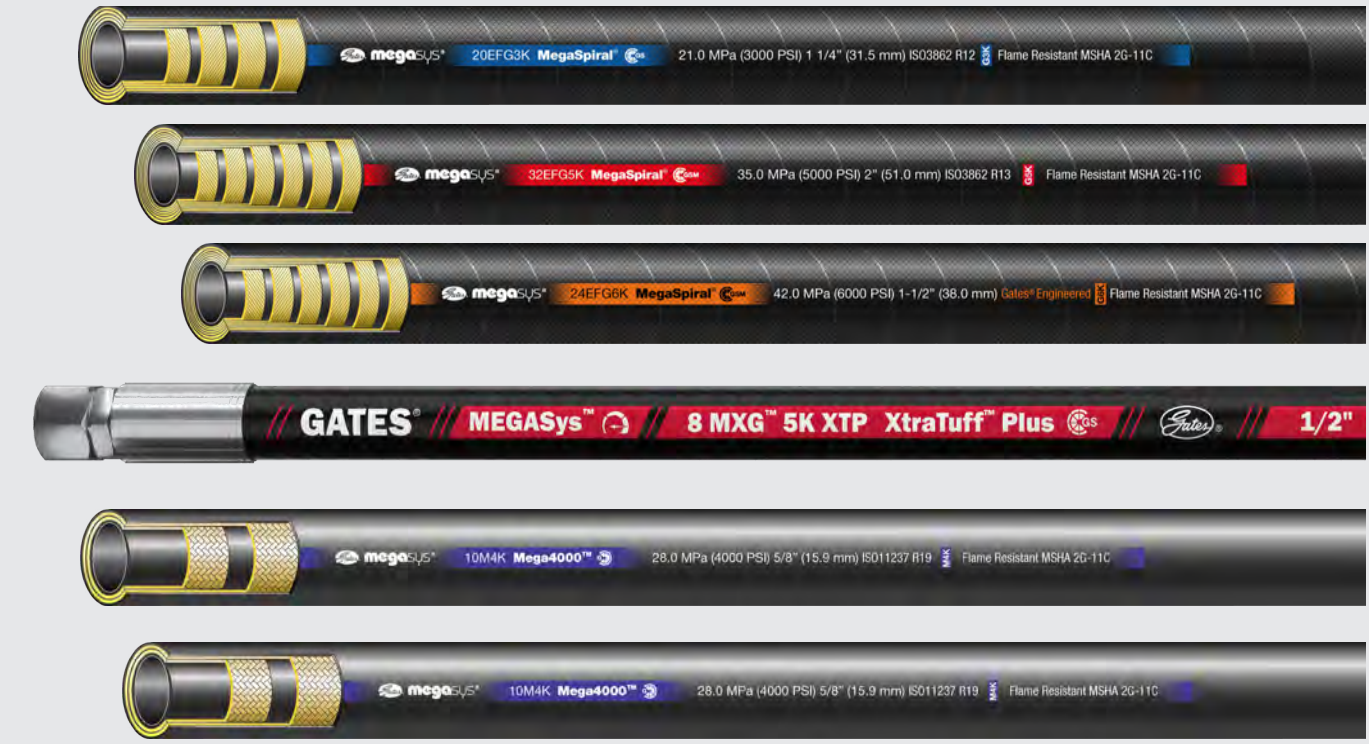

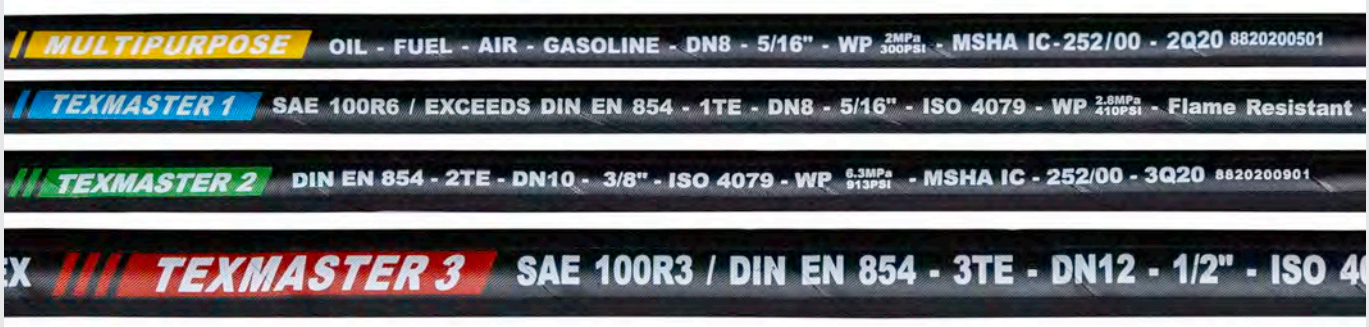

Hydrastore
Hydraulic Systems & Components

System design and development

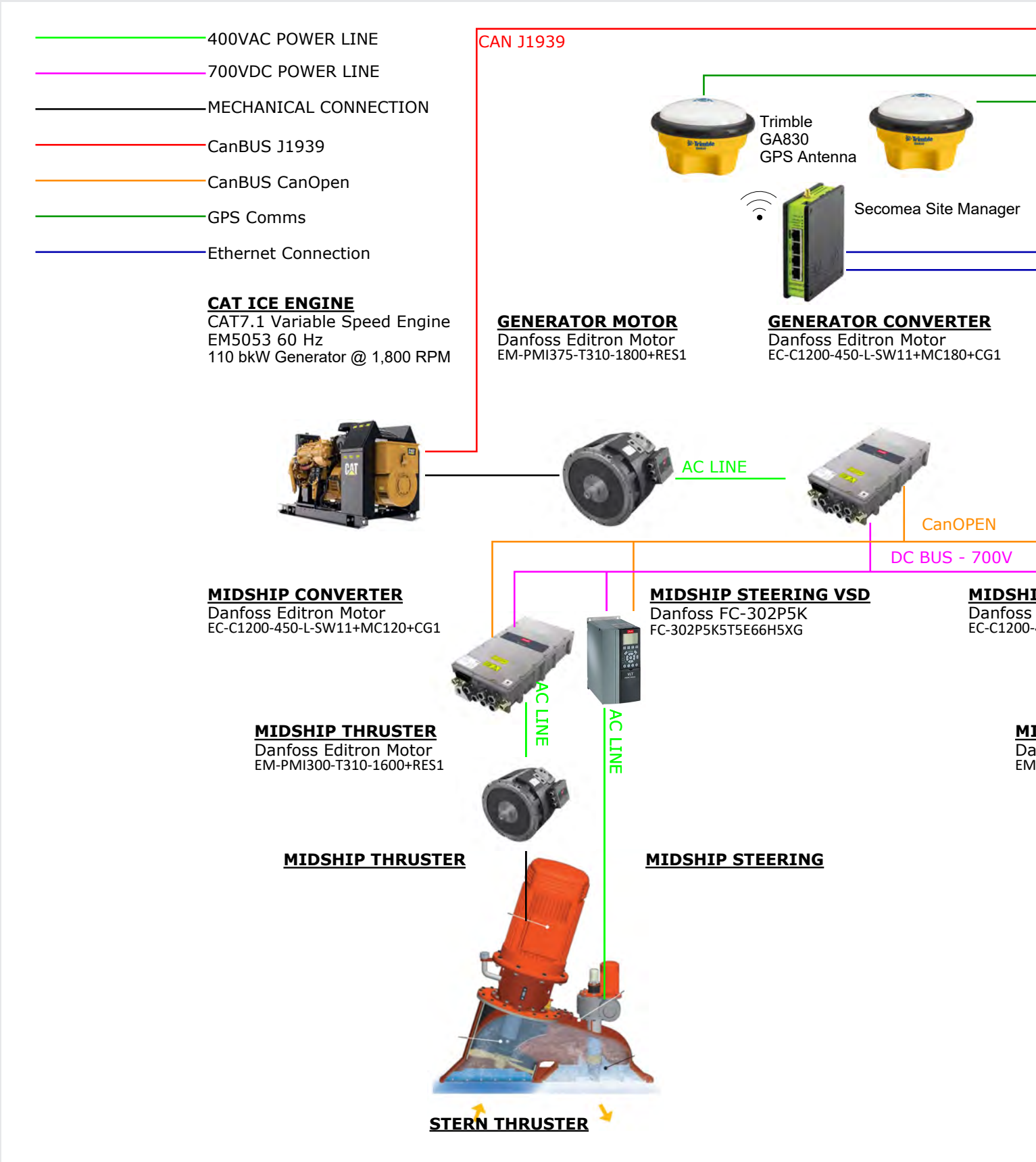

Experts in:

- Hydraulic component and system applications
- Electronic control with in-house software development
- Radio control, standard and customised solutions
- Electrification and its application

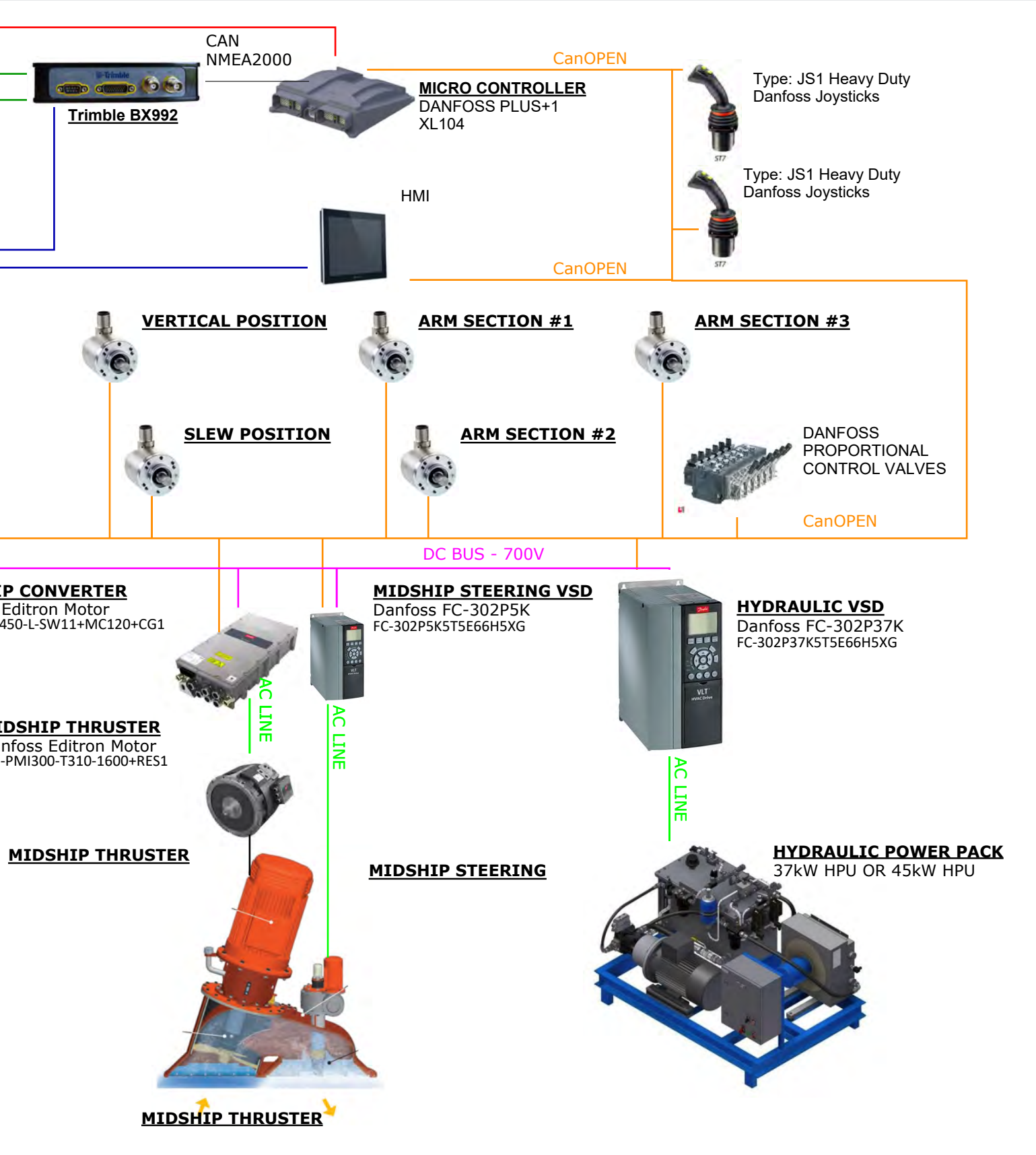

Hydrastore
Hydraulic Systems & Components

Radio control solutions

Hetronic produce a range of radio control systems that comply with international safety standards and as an exclusive partner Hydrastore supports the UK with a vast range of radio control applications.

Whether it is a mobile flail mower, an overhead gantry crane, an excavator system, an application requiring Ex certification for use in hazardous areas, or a retrofit to convert a manually operating machine into remote control, Hydrastore can provide a solution.

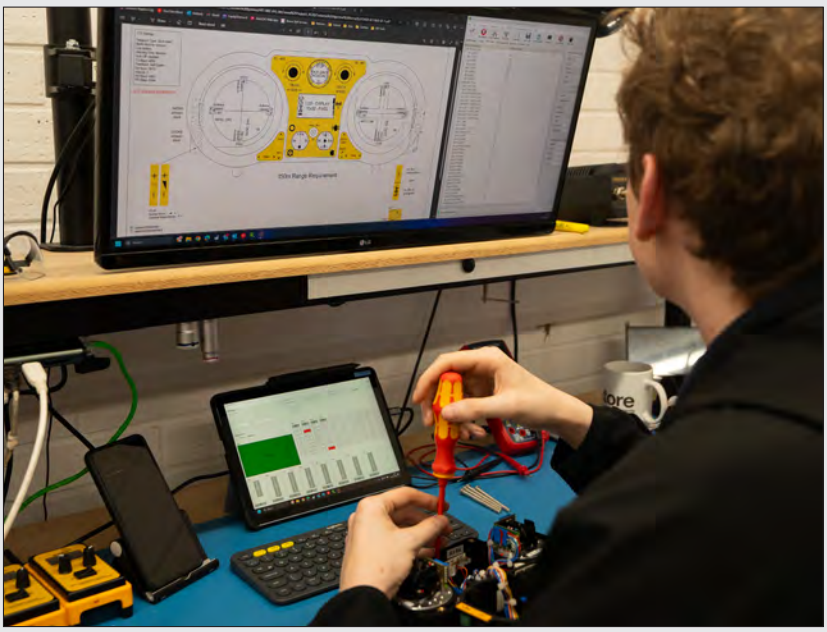

Hydrastore
Hydraulic Systems & Components

Electronic control, electrics & panel building

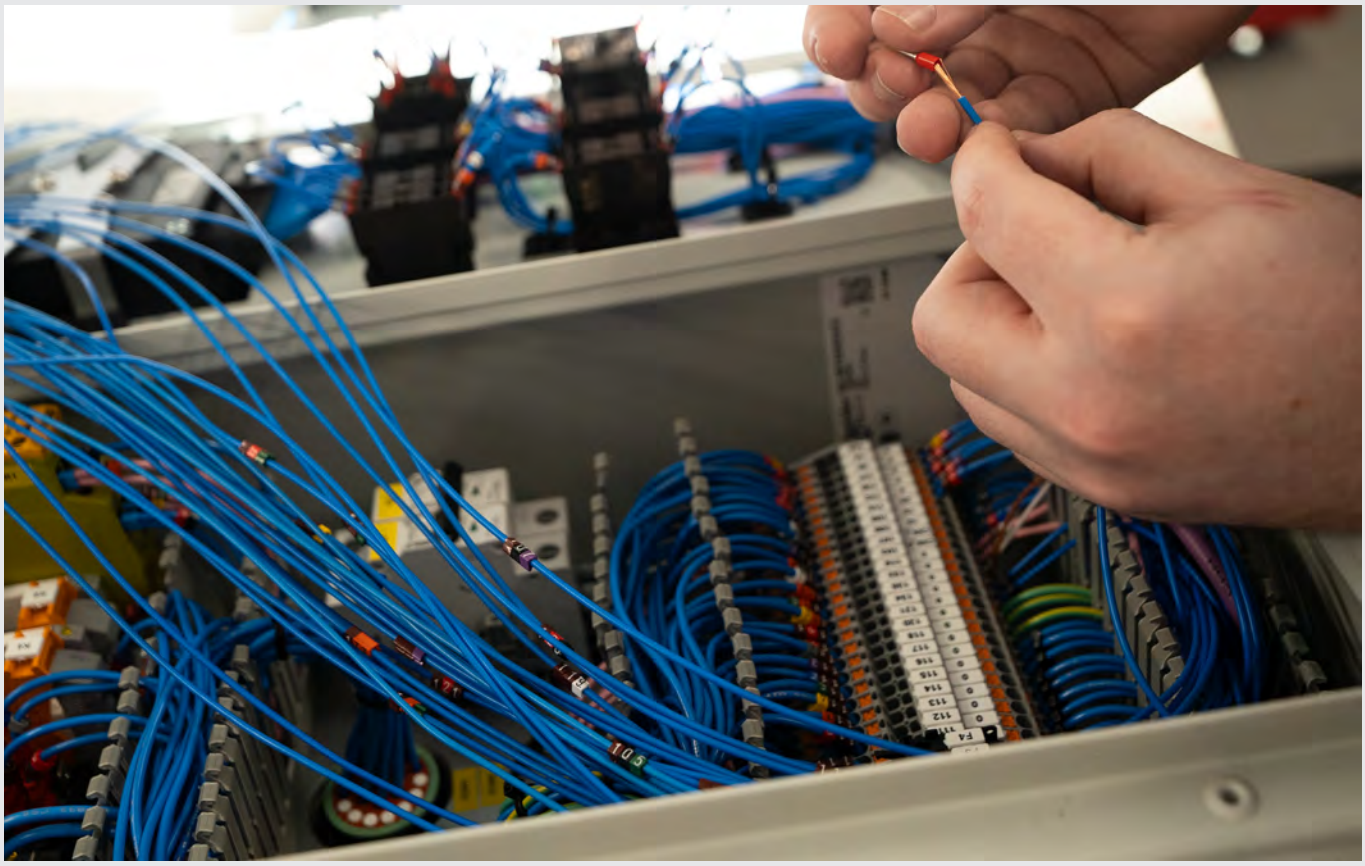

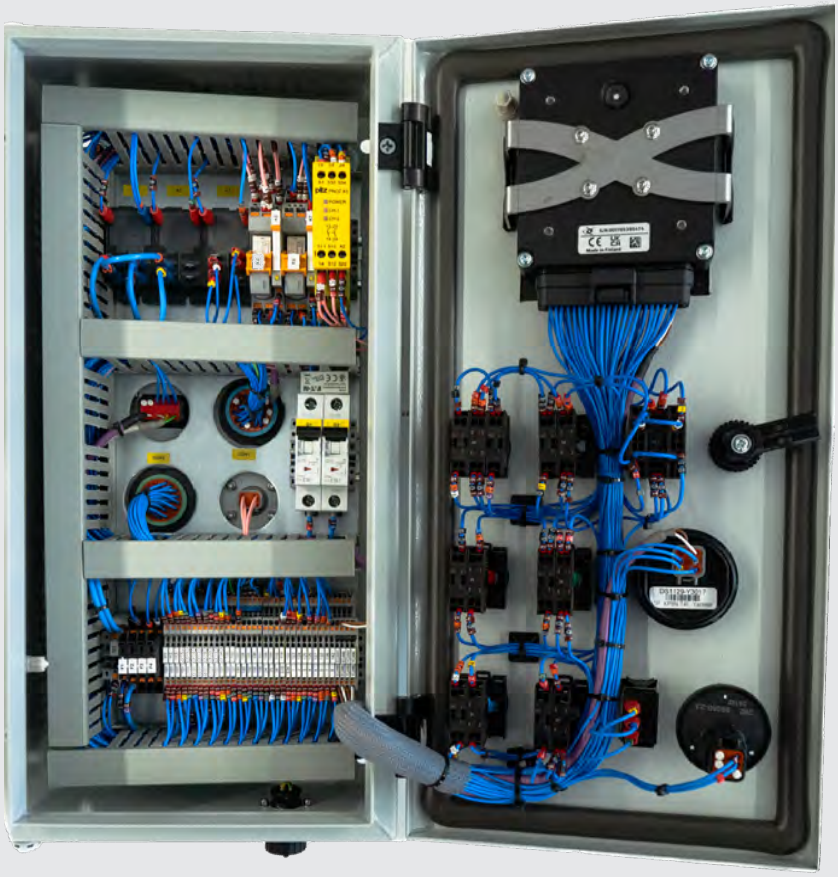

When providing turnkey solutions, no longer do our customers consider the hydraulics and electronic control to be separate entities and at Hydrastore we are able to provide both. This can range from a simple on/off starter to a full control panel with system monitoring.

As part of our controls packages we offer a range of ruggedised controllers, HMI screen displays and radio remote controls. We have in house capability to produce control panels and develop control software and have experience of conventional switch gear, on/off control, analogue, digital, along with proportional and servo equipment.

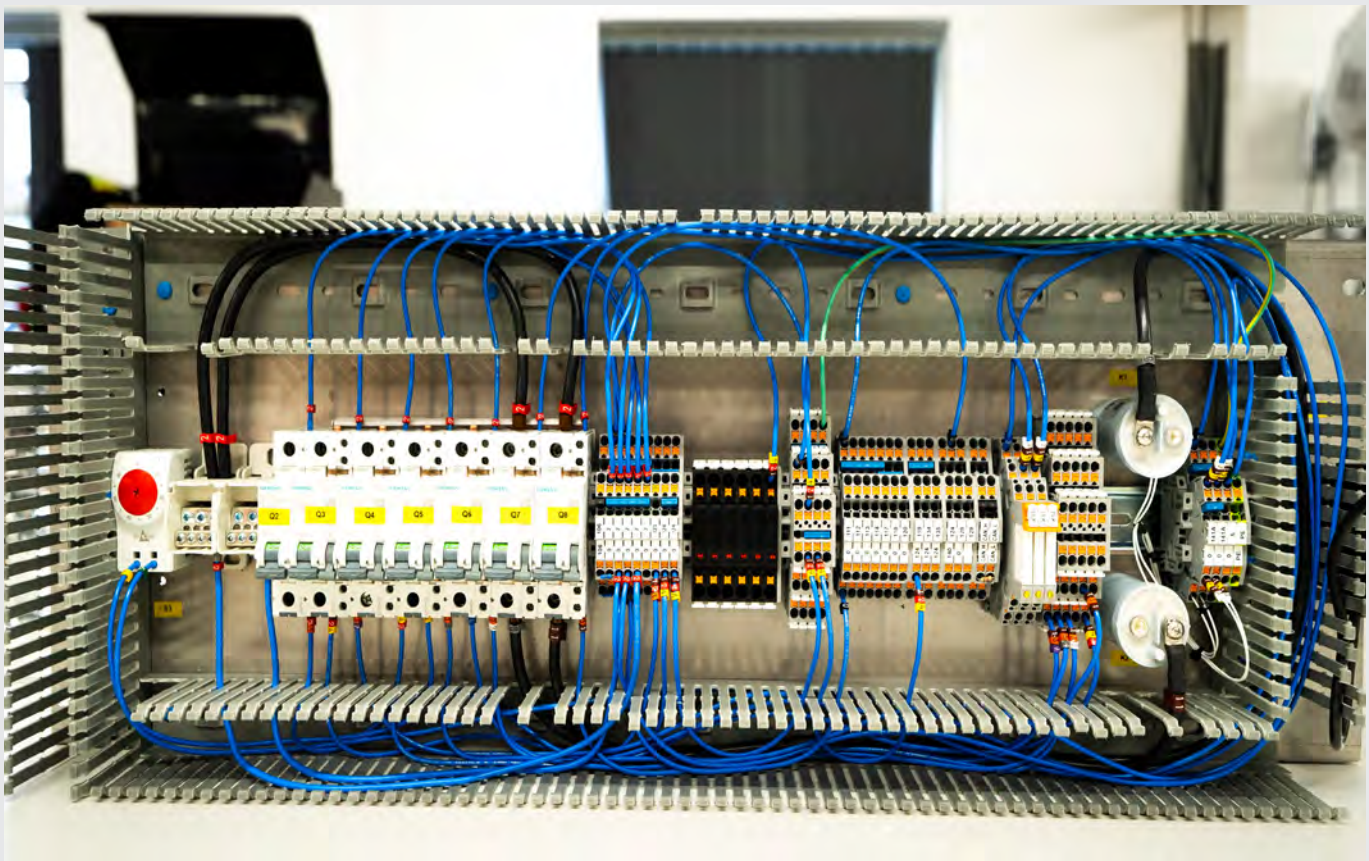

- System specificaition
- Software development
- Prototyping & production
- Commissioning
- Diagnostics & troubleshooting
- Support
- Hazardous areas
  - EX
  - Compex

Hydrastore
Hydraulic Systems & Components

Electrification

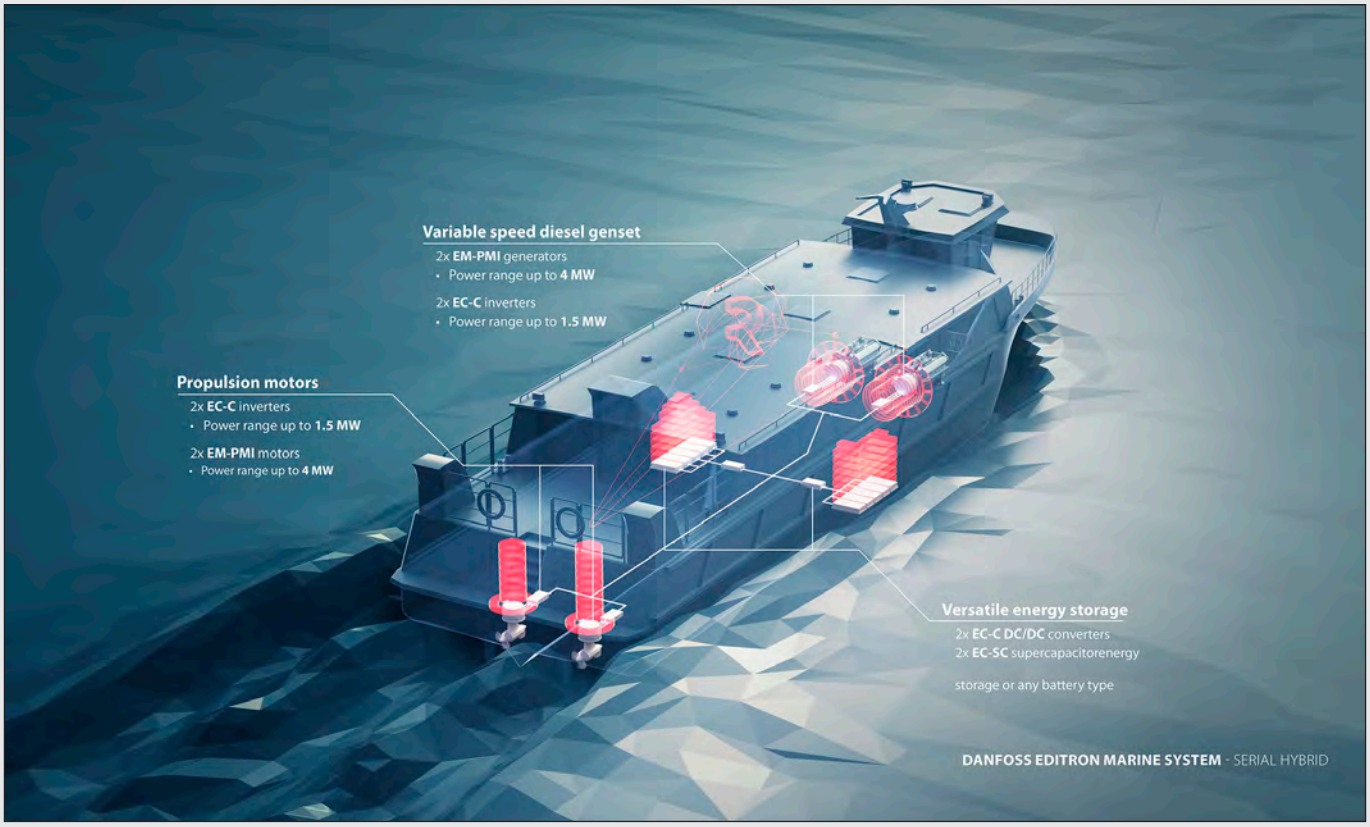

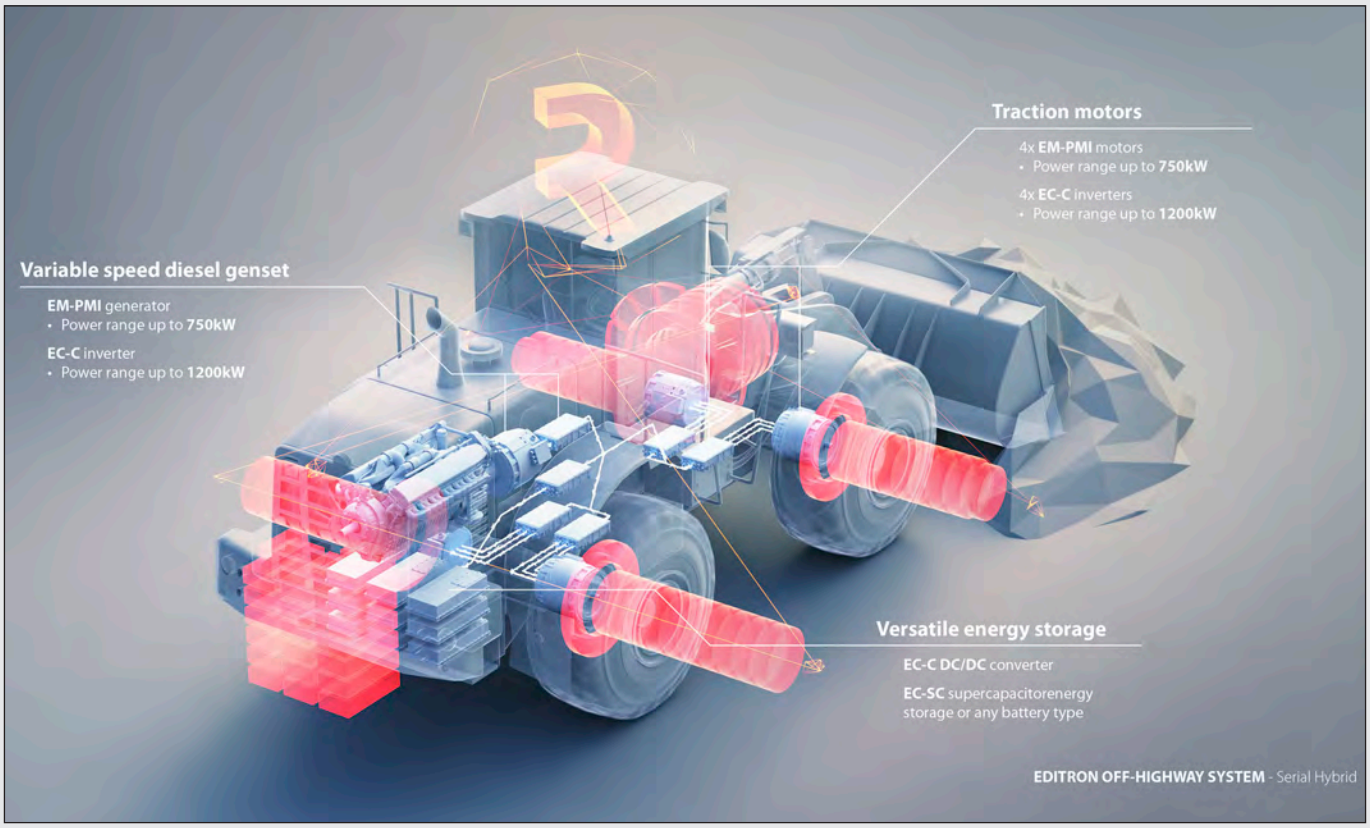

Given Hydrastore's extensive experience with transmission and drive systems and the electronics and software that control them, transitioning into electrification has been seamless. By incorporating advanced electrification technologies into our offering, we assist clients in reducing their environmental footprint while enhancing operational efficiency.

Our electrification expertise spans a wide range of applications, enabling us to meet the diverse and evolving needs of clients in a sustainable and cost-effective way. We provide products that cater to most requirements, with power ranges from 5 to 1000kW.

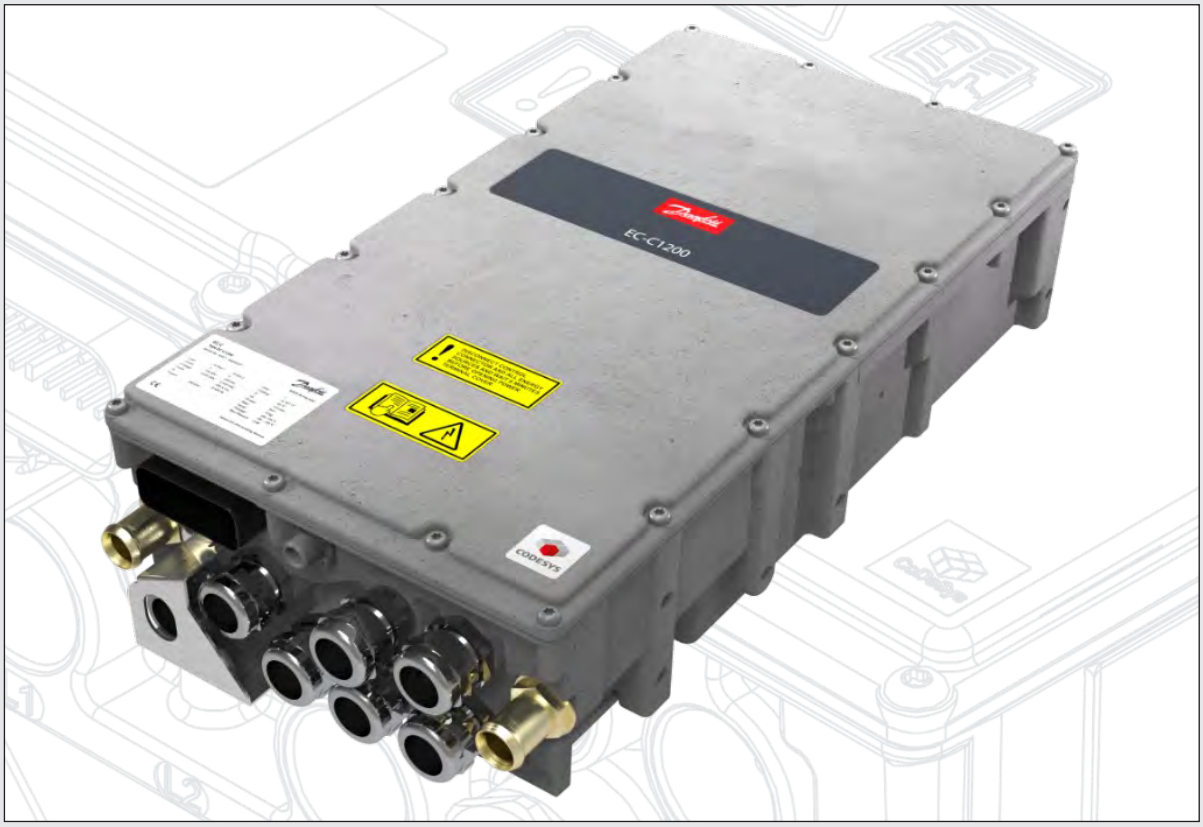

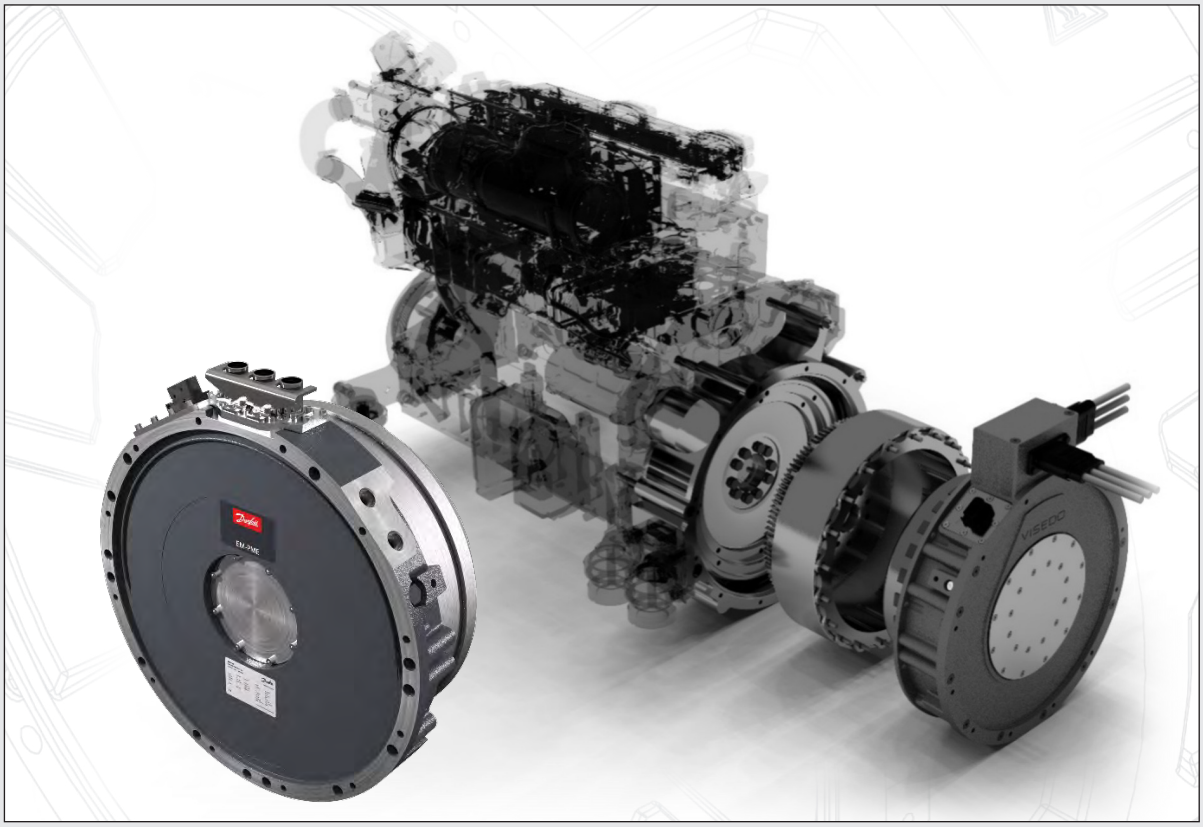

Hydrastore
Hydraulic Systems & Components

Turnkey solutions

Mobile Welder

Closed circuit pumps that are electro proportionally controlled, power the tracks. Operated via an Exertus ruggedised controller with a colour screen and Hetronic radio control for remote operation.

Another strength lies in our capability to deliver turnkey solutions by integrating hydraulic, electronic, and radio control equipment customised to clients' specifications. Our cohesive systems ensure reliability and precision. Focusing on safety and efficiency, Hydrastore's solutions not only enhance productivity but also foster safer working environments. Our access to tier 1 premium products, many of which we stock, ensures our solutions are both reliable and cost-effective. Additionally, our in-house software development team leverages their extensive experience to provide optimised solutions.

Mobile Crusher

Closed circuit electro proportionally controlled pumps drive the tracks. Additional pumps power the hydraulic auxiliary functions and crusher operation. All controlled through an Exertus ruggedised PLC with a colour screen and Hetronic radio control for remote functionality.

Hydrastore
Hydraulic Systems & Components

Tier 1 partners

ANFIELD SENSORS INC.

Anfield Sensors Inc is a leading manufacturer of hydraulic and pneumatic sensors, specialising in pressure, vacuum, differential, and temperature switches/transducers. With a comprehensive product range Anfield can serve various markets including industrial, mobile, food service, medical and military industries.

atos®

Experts in electro hydraulics, Atos' advanced technology combines oil hydraulics with electronics to improve the performance of modern machinery. Products include

- Vane and piston pumps
- Hydraulic cylinders
- Directional control valves
- Conventional and modular valves
- Cartridge valves
- Proportional valves
- Electronic controls

Balflex®

Established in 1963, Balflex is a European international group of companies dedicated to the design and production of many fluid transfer products. Hydrastore manufactures hose assemblies, and stocks a large selection of Balflex hoses and fittings suitable, for a wide variety of low to very high pressure applications. Assembly machinery, including crimping machines and cutting machines, are also available.

Danfoss

As one of the largest companies in the mobile hydraulics industry, Danfoss designs, manufactures and sells a complete range of engineered hydraulic and electronic components including:

- Hydrostatic transmissions
- Orbital motors
- PVG spool valves
- Steering components
- Mobile electronics
- Electrification

EXERTUS
Freedom To Create **Together.**

The significance of electronics in optimising hydraulic solutions plays an ever increasing role. The exclusive UK partnership Hydrastore formed with Finnish control development company Exertus provides our customers with the ideal solutions. Supported by our team of in-house control specialists these products are being demanded more and more bya our innovative customers.

Gates®

Gates is renowned worldwide for its high quality hoses and fittings, serving various industries with innovative fluid power and power transmission solutions. Ideal for many industrial and mobile equipment applications, Gates hydraulic hose ranges are suitable for systems from low pressure through to very high pressure. Hydrastore can provide customers with Gates hose assemblies using state of the art machinery as well as component supply from our vast stockholding of Gates products.

H·T HANSA · TMP

HANSA-TMP manufactured products provide the perfect solution for high power closed circuit transmission systems where space is of a premium. Hydrastore can help specify the right pump or motor from their comprehensive ranges to ensure it meets the application's requirements.

HETRONIC
A METHODE ELECTRONICS COMPANY

With operator safety being of paramount importance and machine efficiency ranking high on the priority list, radio remote control has become a standard feature on many mobile and industrial applications. Hetronic supplies a comprehensive range of radio remote control systems suitable for many types of application whether they require standard or customised solutions.

Exclusive UK partner, engineering and delivering a solution within competitive timeframes. Wide range of double-acting and spring return/failsafe actuators. Pressure rating up to 350 bar torque up to 350,000Nm. Wide capabilities and applications.
ATEX, DIN and SIL certification and standards.

Boasting one of the most complete mobile control valve ranges of any manufacturer in the world, Hydrocontrol has a reputation for high quality, innovative and cost effective products. Products include:

- Sectional valves
- Load sensing
- Monoblock valves
- Selector valves
- Standard
- Flow sharing
- Remote controls

Impro Fluidtek develop, manufacture, and distribute advanced components and systems for hydraulic motion and control applications. They are renowned for their market leadership in Orbital Motors, and have commanded an authoritative presence in the market for over forty. Hydrastore stocks a range of motors to meet the varying needs of our customers.

Kawasaki manufactures a wide range of piston pumps and motors, for both open and closed circuit applications. Around the world, in virtually every area of construction, marine and manufacturing industry, Kawasaki pumps and motors provide cost effective and reliable solutions.

MiniBOOSTER are able to provide solutions for most applications requiring pressure intensification. The product range includes solutions for pressure up to 5,000 bar, flow up to 400 l/min and almost every fluid media.

Ronzio Oleodinamica manufactures gear pumps, motors and flow dividers in both aluminium and cast iron construction for a wide range of industries including: construction, forestry, agricultural, commercial vehicles, earth moving and machine tools. Holding varied stock options, Hydrastore is able to supply single or multiple pumps to meet a wide range of applications in today's market.

Hydrastore's exclusive UK partnership with TTP, part of the wolrd's largest manufacturers of heat exchangers, provides our customers with access to a range of reliable, innovative, highly efficient and cost effective heat transfer solutions.
Products include:

- Air cooled, hydraulic and electric motor driven fan systems
- Combination coolers for engines, hydraulic systems, water and air water cooled

Hydrastore History / Timeline

September 1989	DCA form Hydrastore.
November 1990	Hydrocontrol partnership starts.
March 1995	Atos partnership starts.
June 1998	Hydrastore purchase Allison Hydraulics.
April 2000	HKS partnership starts.
August 2003	White Hydraulics partnership starts.
October 2004	Ronzio partnership starts.
November 2008	Thermal Transfer Products (TTP) partnership starts.
February 2011	Kawasaki systems partnership starts.
February 2012	Allison Hydraulics purchase AG Hydraulics.
November 2012	Exertus partnership starts.
January 2016	Hansa partnership starts.
February 2017	Allison's merge into Hydrastore.
May 2017	Danfoss partnership starts.
July 2017	Lodematic's name changed to Valley Hydraulics.
January 2020	Minibooster partnership starts.
March 2020	Hetronic partnership starts.
May 2021	Gates partnership starts.
January 2024	Balflex partnership starts.
January 2024	Impro Fluidtek partnership starts.

Formulas

Fast Track hydraulic formulae

Pumps and Motors

Flow Rate (l/min) $Q = \frac{D \times n}{1000}$

Shaft Torque (Nm) $T = \frac{D \times \Delta p}{20\pi}$

Shaft Power (kW) $P = \frac{T \times n}{9550}$

Hydraulic Power (kW) $P = \frac{Q \times p}{600}$

Cylinders

Force (N) $F = p \times A \times 10$

Velocity (m/s) $v = \frac{Q \times 0.167}{A}$

Area (cm2) $A = \frac{\pi d^2}{400}$

Note: component efficiencies need to be considered for a more precise analysis.

Where:

Q = Flow Rate [L/min]
n = Shaft Speed [rev/min]
p = Pressure [bar]
P = Power [kW]
D = Displacement [cm³/rev]
F = Force [N]

v = Velocity [m/s]
T = Torque [Nm]
A = Area [cm²]
d = Pipe Diameter [mm]
Δp = Pressure Drop (bar)

Flushing formulae

Flushing is a process designed to remove dirt introduced into the system during manufacture, assembly and initial operation. It is also used when significant maintenance is undertaken. The requirements are summarised below:-

- A turbulent flow regime to pick-up the particles from the walls of components and transport them to the flushing filter.
- The Reynolds number (Re) defines the flow condition and should be greater thn 4,000 and can be calculated using:

Reynolds Number $Re = \frac{21{,}200 \times Q}{v \times d}$

Where:
Q = Flow Rate (l/min)
v = Viscosity (cSt)
d = Pipe Diameter (mm)
Re = Reynolds Number

Or, to achieve Re ≥ 4,000 $Q > 0.189 \times v \times d$

- A 'fine' filter to capture transported particles quickly and effectively.

Electronics Formulae

V=Voltage (volts)
I =Current (amps)
R=Resistance (ohms)
P=Power (watts)

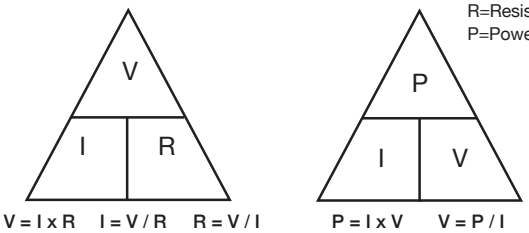

V = I x R I = V / R R = V / I P = I x V V = P / I

Hydraulic pipes and hoses formulae

Velocity of fluid in pipe (m/s) $v = \frac{Q \times 21.22}{d^2}$

Where: d = Pipe Diameter (mm)

Recommended fluid velocity ranges:

Suction lines: 0.625m/s – 1.25m/s **Pressure lines:** 2.1m/s – 4.75m/s

Based on oils having a maximum viscosity grade of 70 cSt at 38°C and operating between 18°C and 51°C.

Note: For pipe runs greater than 10m the pipe size should be increased correspondingly. The intake line should never exceed 1m in length.

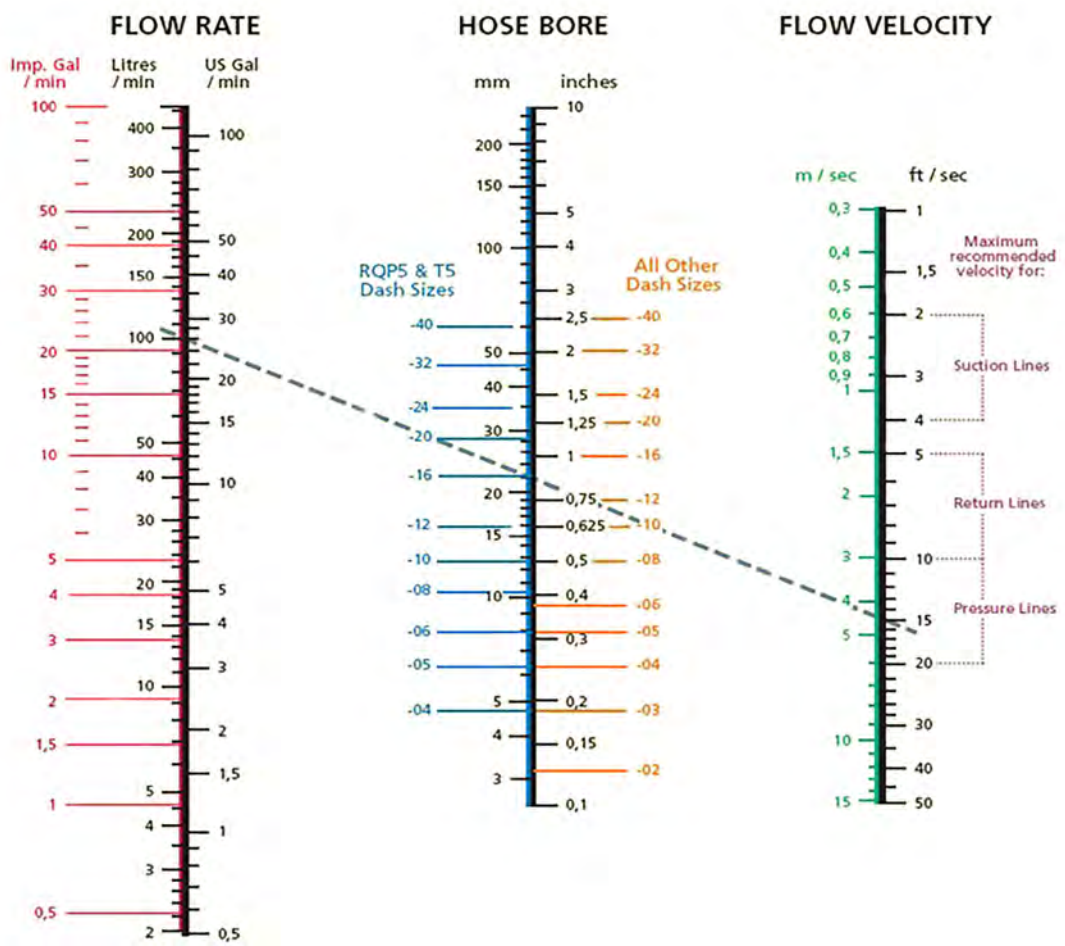

Hydrastore branches

System & Components Division
Sandtoft Ind. Estate
Belton, Nr. Doncaster
South Yorkshire
DN9 1PN
T: 01427 874445
E: sales@hydrastore.co.uk

Fluid Transfer Division
Unit 11, Haywards Industrial Estate,
Orton Way, Castle Bromwich,
Birmingham,
B35 1BT
T:0121 326 6395
E: hoses@hydrastore.co.uk

www.hydrastore.co.uk

Hydrastore Limited
@HydrastoreL
@hydrastorehydraulics

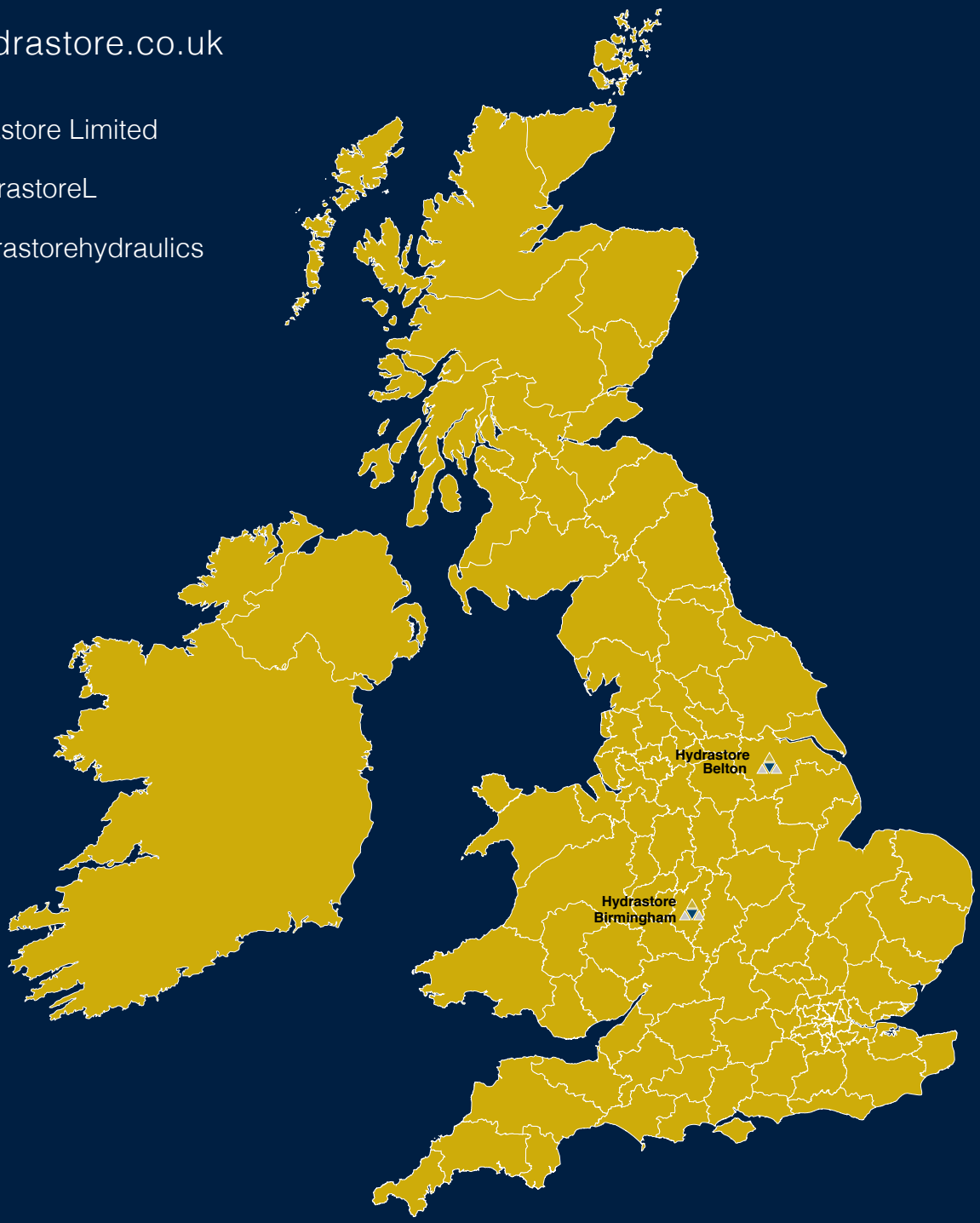

Version 7.0 June 2024